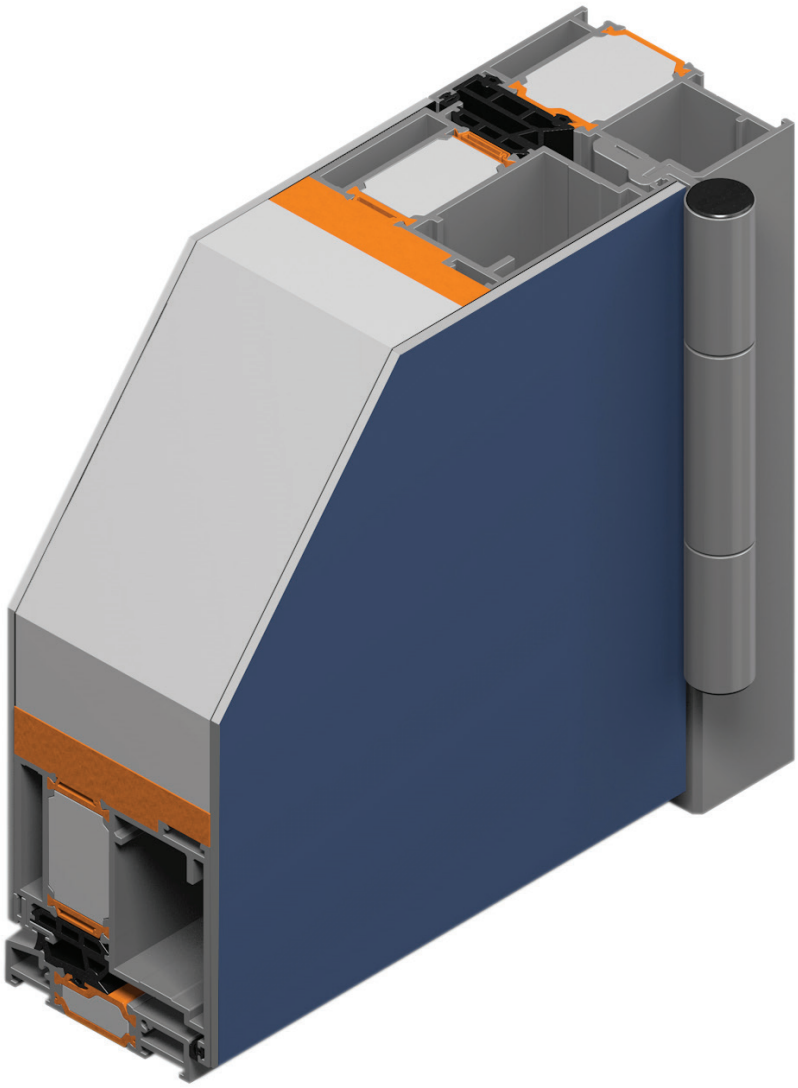
FEAL



TERMO **85 VS** I **VP**

ULAZNA VRATA

ENTRY DOOR

Knjiga B / *Book B*

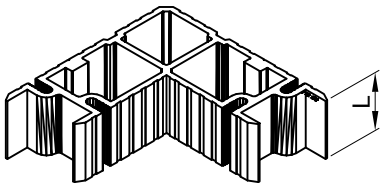
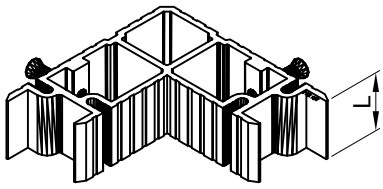
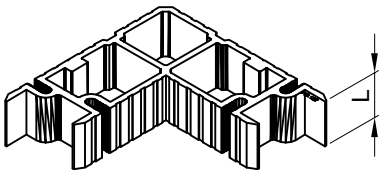
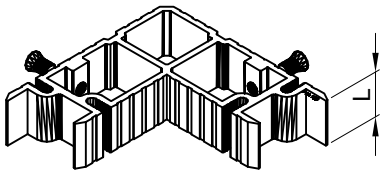
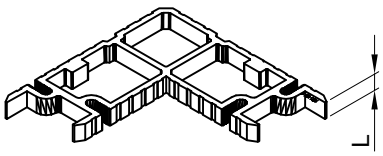
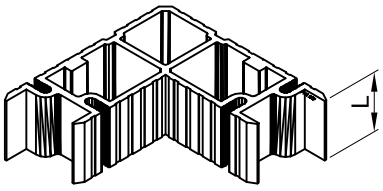
SADRŽAJ - CONTENT

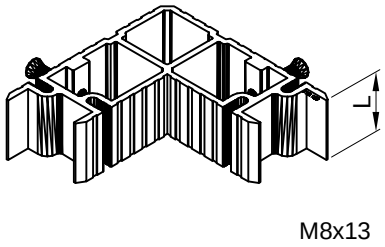
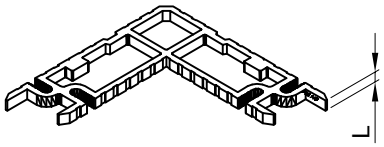
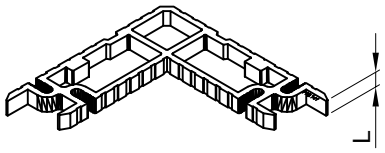
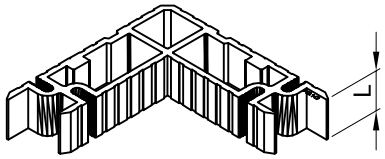
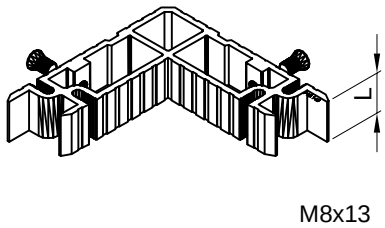
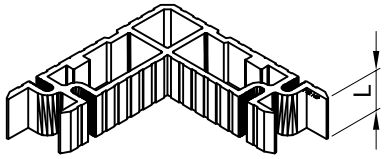
06	VEZNI ELEMENTI	303.06.000-007
06	CONNECTION ELEMENTS	303.06.000-007
07	PVC ELEMENTI	303.07.000-003
07	PVC ELEMENTS	303.07.000-003
08	MEHANIZMI	303.08.000-017
08	MECHANISMS	303.08.000-017
09	BRTVILA	303.09.000-007
09	GASKETS	303.09.000-007
10	DODACI	303.10.000-007
10	ACCESSORIES	303.10.000-007
11	OBRADA I MONTAŽA - KUTNE SPOJNICE	303.11.000-041
11	PROCESSING AND MONTAGE - CORNER BRACKETS	303.11.000-041
11	OBRADA I MONTAŽA - ČEPOVI	303.11.050-059
11	PROCESSING AND MONTAGE - PVC CAPS	303.11.050-059
11	OBRADA I MONTAŽA - PREČKE I UMETCI	303.11.070-092
11	PROCESSING AND MONTAGE - TRANSOM AND ADD PROFILE	303.11.070-092
11	OBRADA I MONTAŽA - BRAVE	303.11.100-107
11	PROCESSING AND MONTAGE - MULTIPOINT LOCKS	303.11.100-107
11	OBRADA I MONTAŽA - ŠARKE	303.11.120-131
11	PROCESSING AND MONTAGE - HINGES	303.11.120-131
11	OBRADA I MONTAŽA - ODVOD KAPLJEVINA	303.11.144-149
11	PROCESSING AND MONTAGE - WATER DRAINAGE	303.11.144-149
11	OBRADA I MONTAŽA - RUKOHVATI	303.11.160-163
11	PROCESSING AND MONTAGE - DOOR PULL HANDLE	303.11.160-163

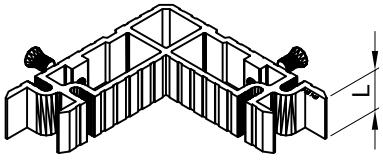
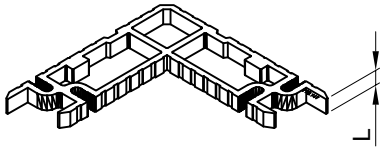
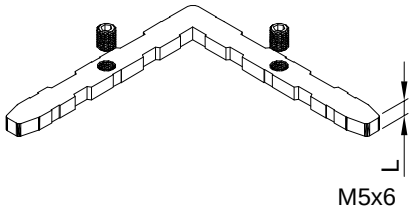
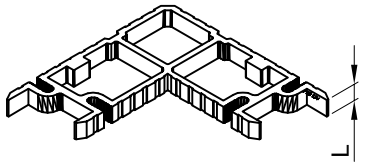
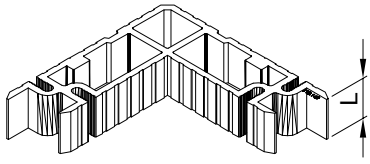
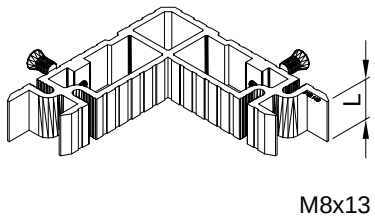
SADRŽAJ - CONTENT

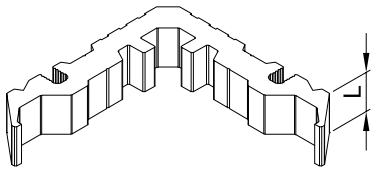
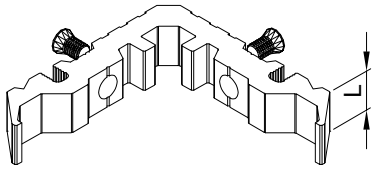
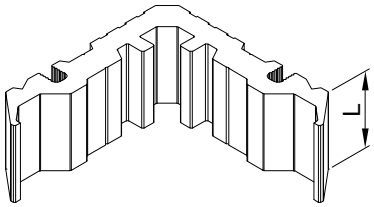
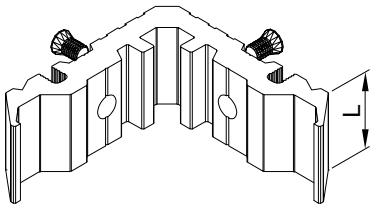
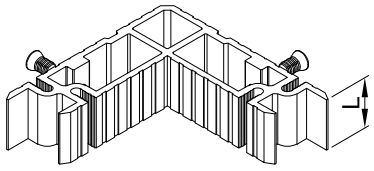
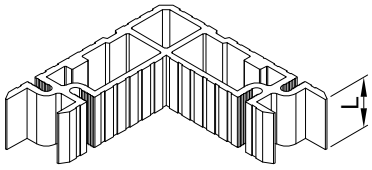
11	OBRADA I MONTAŽA - PANEL ZA VRATA	303.11.180-189
11	PROCESSING AND MONTAGE - DOOR PANEL	303.11.180-189
11	OBRADA I MONTAŽA - AUTOMATSKO OTVARANJE	303.11.200-207
11	PROCESSING AND MONTAGE - DOOR PANEL	303.11.200-207
12	REZNE LISTE	303.12.000-141
12	CUTTING LISTS	303.12.000-141

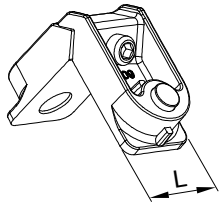
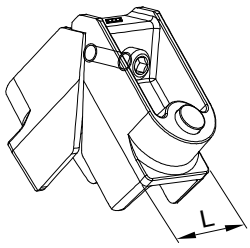
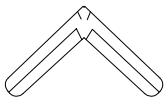
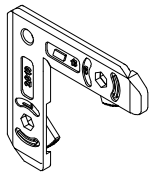
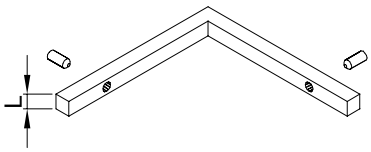
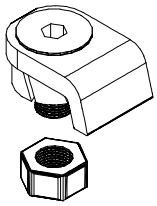
Vezni elementi
Connection elements

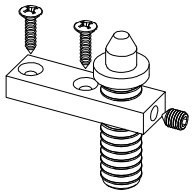
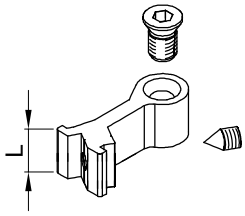
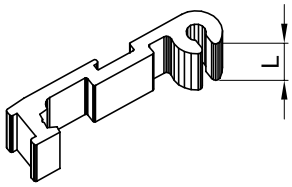
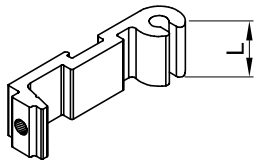
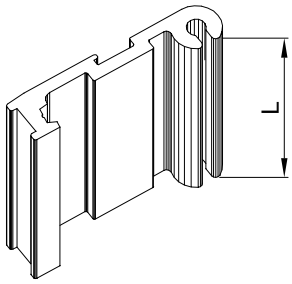
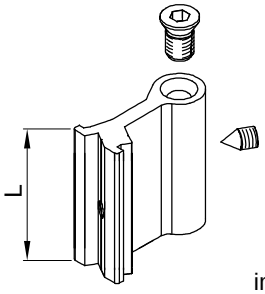
Oznaka Code	Izgled-presjek View- cross section	Opis Description	Materijal Material	Napomena Remark
710.130		- Kutna spojnica 46, L=36.4 - Corner bracket 46, L=36.4	Al.	
710.131	 M8x13	- Kutna spojnica 46, L=36.4 (s vijcima) - Corner bracket 46, L=36.4 (with screws)	Al.	
710.062		- Kutna spojnica 46, L=28 - Corner bracket 46, L=28	Al.	
710.133	 M8x13	- Kutna spojnica 46, L=28.1 (s vijcima) - Corner bracket 46, L=28.1 (with screws)	Al.	
710.134		- Kutna spojnica 46, L=10.3 - Corner bracket 46, L=10.3	Al.	
710.135		- Kutna spojnica 46, L=37.4 - Corner bracket 46, L=37.4	Al.	

Oznaka Code	Izgled-presjek View- cross section	Opis Description	Materijal Material	Napomena Remark
710.136		- Kutna spojnica 46, L=37.4 (s vijcima) - Corner bracket 46, L=37.4 (with screws)	Al.	
710.140		- Kutna spojnica 34.6, L=6.3 - Corner bracket 34.6, L=6.3	Al.	
710.141		- Kutna spojnica 34.6, L=9.3 - Corner bracket 34.6, L=9.3	Al.	
710.142		- Kutna spojnica 34.6, L=25.1 - Corner bracket 34.6, L=25.1	Al.	
710.143		- Kutna spojnica 34.6, L=25.1 (s vijcima) - Corner bracket 34.6, L=25.1 (with screws)	Al.	
710.144		- Kutna spojnica 34.6, L=30.9 - Corner bracket 34.6, L=30.9	Al.	

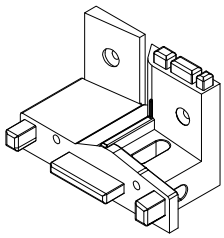
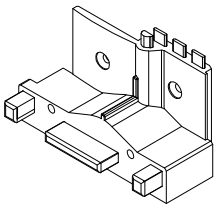
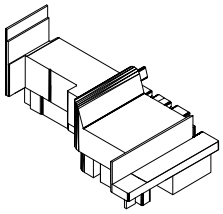
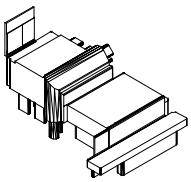
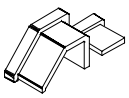
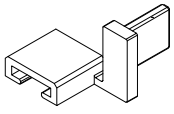
Oznaka Code	Izgled-presjek View- cross section	Opis Description	Materijal Material	Napomena Remark
710.145		- Kutna spojnica 34.6, L=30.9 (s vijcima) - Corner bracket 34.6, L=30.9 (with screws)	Al.	
710.091		- Kutna spojnica 34.6, L=11.8 - Corner bracket 34.6, L=11.8	Al.	
710.015		- Kutna spojnica 8, L=3.8 (s vijcima) (Stara oznaka: K-061059/D) - Corner bracket 8, L=3.8 (with screws) (Former code: K-061059/D)	Al.	
710.169		- Kutna spojnica 46, L=9.1 - Corner bracket 46, L=9.1	Al.	
710.172		- Kutna spojnica 34.6, L=14.7 - Corner bracket 34.6, L=14.7	Al.	
710.173		- Kutna spojnica 34.6, L=14.7 (s vijcima) - Corner bracket 34.6, L=14.7 (with screws)	Al.	

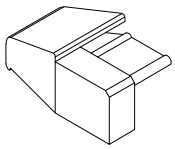
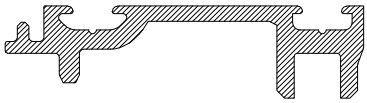
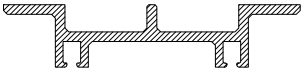
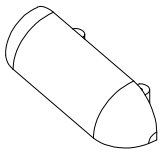
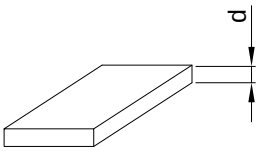
Oznaka Code	Izgled-presjek View- cross section	Opis Description	Materijal Material	Napomena Remark
710.484		- Kutna spojnica 14.6, L=14.5 - Corner bracket 14.6, L=14.5	Al.	
710.485	 M8x13	- Kutna spojnica 14.6, L=14.5 (s vijcima) - Corner bracket 14.6, L=14.5 (with screws)	Al.	
710.450		- Kutna spojnica 14.6, L=28.5 - Corner bracket 14.6, L=28.5	Al.	
710.458	 M8x13	- Kutna spojnica 14.6, L=28.5 (s vijcima) - Corner bracket 14.6, L=28.5 (with screws)	Al.	
710.125	 M8x13	- Kutna spojnica 34.6, L=31.7 (s vijcima) - Corner bracket 34.6, L=31.7 (with screws)	Al.	
710.126		- Kutna spojnica 34.6, L=31.7 - Corner bracket 34.6, L=31.7	Al.	

Oznaka Code	Izgled-presjek View- cross section	Opis Description	Materijal Material	Napomena Remark
730.008		- Kutna spojnica 14.5, L=28.5 (Stara oznaka: 0409, 1001) - Corner bracket 14.5, L=28.5 (Former code: 0409, 1001)	Al.	
730.009		- Kutna spojnica 34.6, L=28.5 (Stara oznaka: 0447, 2001) - Corner bracket 34.6, L=28.5 (Former code: 0447, 2001)	Al.	
730.001		- Kutna spojnica za komoru 4.8x2 (Stara oznaka: G112, 0365) - Corner bracket for chamber 4.8x2 (Former code: G112, 0365)	Inox	
731.010		- Kutna spojnica za komoru 19.1x1.6 - Oznaka proizvođača Monticelli: 2019 - Corner bracket for chamber 19.1x1.6 - Manufacturer code Monticelli: 2019	Al.	
710.203		- Kutna spojnica 5, L=4.9 (s elastičnim zatikom) - Corner bracket 5, L=4.9 (with spring pin)	Al.	
141.001		- Kopča za spajanje panel ispune s krilom vrata (Stara oznaka: VP-011) - Clamp for connecting panel and door leaf (Former code: VP-011)	Inox	

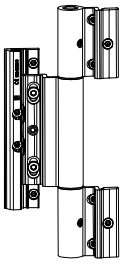
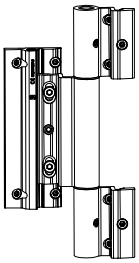
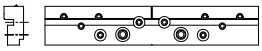
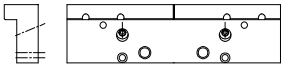
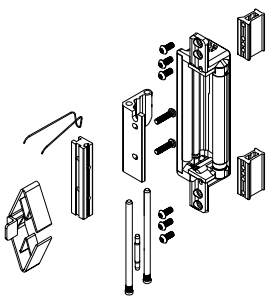
Oznaka Code	Izgled-presjek View- cross section	Opis Description	Materijal Material	Napomena Remark
141.002		- Protuprovalni umetak za vrata (Stara oznaka: OV-001) - Security pin for door (Former code: OV-001)	Al.	
710.066	 M8x13 imbus M6x10	- Veznik, L=14.7 (Stara oznaka: E-200) - T-bracket, L=14.7 (Former code: E-200)	Al.	
710.079		- Dodatni veznik, L=12.8 - Additional T-bracket, L=12.8	Al.	
710.171		- Dodatni veznik, L=12.8 - Additional T-bracket, L=12.8	Al.	
710.082		- Dodatni veznik, L=29.5 - Additional T-bracket, L=29.5	Al.	
710.083	 M8x13 imbus M6x10	- Veznik, L=31 - T-bracket, L=31	Al.	

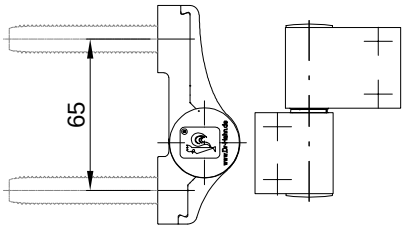
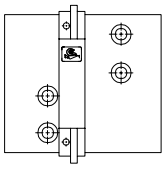
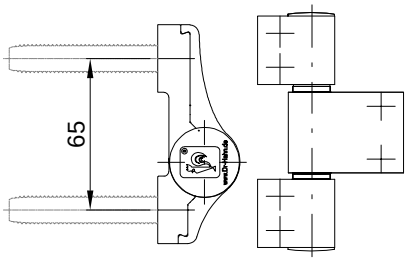
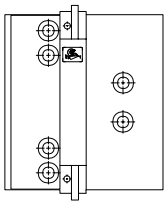
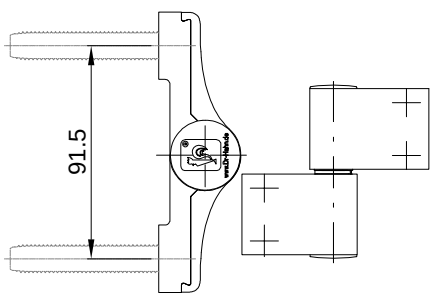
PVC elementi
PVC elements

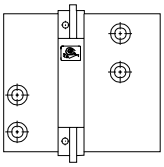
Oznaka Code	Izgled-presjek View - cross section	Opis Description	Materijal Material	Napomena Remark
363.103		- Umetak za profil praga FT-0584F (otvaranje unutra) - End insert for threshold FT-0584F (inward opening)	PVC	Par Pair
373.020		- Umetak za profil praga FT-0585F (otvaranje vani) - End insert for threshold FT-0585F (outward opening)	PVC	Par Pair
363.014		- Umetak za profil kombatute FT-0571F (otvaranje unutra) - End insert for flying mullion FT-0571F (inward opening)	PVC	Par Pair
363.016		- Umetak za profil kombatute FT-0572F (otvaranje vani) - End insert for flying mullion FT-0572F (outward opening)	PVC	Par Pair
373.027		- Umetak za profil okapnice F-1200 - End insert for drip cap profile F-1200	PVC	Par Pair
373.057		- Umetak za profil okapnice F-1596 - End insert for drip cap profile F-1596	PVC	Par Pair

Oznaka Code	Izgled-presjek View - cross section	Opis Description	Materijal Material	Napomena Remark
375.001		- Umetak za profil okapnice F-0970 - Stara oznaka: ČO-001/2 - End insert for drip cap profile F-0970 - Former code: ČO-001/2	PVC	Par Pair
374.043		- PVC profil (umetak) za vrata (s profilom F-1222) - PVC profile - additional profile in frame for door (with profile F-1222)	PVC	
374.048		- Pvc profil za parapetnu prečku - Pvc profile for transom-bottom sash profile	PVC	
370.070.01 03		- Maska sa klapnom za drenažni otvor - Oznaka proizvođača Master: 2145 - Boje: 01- bijela; 03- crna - Drainage slot mask with a flap - Manufacturer code Master: 2145 - Color: 01- white; 03- black	PVC	
370.000 370.001 370.002		- Podmetači za staklo - Glazing packers d=3 mm.....370.000 d=5 mm.....370.001 d=7mm.....370.002 (L x H = 18 x 27 mm)	PVC	
370.083		- Difuzor za profil LED rasvjete (2 m) (profil skrivenog rukohvata) - Diffuser for LED lighting profile (2 m) (concealed handle profile)	Polikarbonat (PC)	

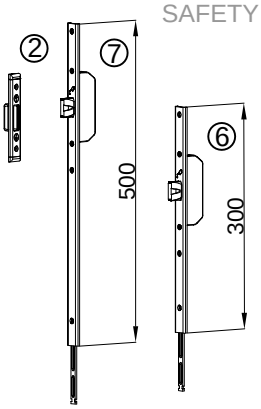
Mehanizmi
Mechanisms

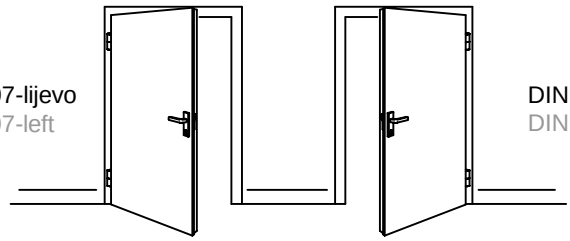
Oznaka Code	Izgled-presjek View-cross section	Opis Description	Materijal Material	Napomena Remark
112.011.01 03 10		- Cilindrična šarka (Rollenband AT FEAL)- Dr.Hahn - Otvaranje unutra - Oznaka distributera GU: L-58R7516FA00 - bijela 19FA00 - crna 11FA00 - EV1 - Boje: 01- bijela; 03 - crna; 10 - EV1 - Barrel door hinge (Rollenband AT FEAL) - Dr. Hahn - inward opening - Distributor code GU: L-58R7516FA00 - bijela 19FA00 - crna 11FA00 - EV1 - Color: 01- white; 03 - black; 10 - EV1	Al.	
112.012.01 03 10		- Cilindrična šarka (Rollenband AT FEAL)- Dr. Hahn - Otvaranje vani - Oznaka distributera GU: L-58R7516FA01 - bijela 19FA01 - crna 11FA01 - EV1 - Boje: 01- bijela; 03 - crna; 10 - EV1 - Barrel door hinge (Rollenband AT FEAL) - Dr. Hahn - outward opening - Distributor code GU: L-58R7516FA01 - bijela 19FA01 - crna 11FA01 - EV1 - Color: 01- white; 03 - black; 10 - EV1	Al.	
112.013		- Šablon za cilindričnu šarku (Rollenband AT FEAL) -Dr. Hahn - otvaranje unutra (za obradu profila rama i krila) - Oznaka distributera GU: L-58T370B0020 - Drilling jig for the barrel door hinge (Rollenband AT FEAL) - Dr. Hahn - inward opening (for processing of the frame and leaf profile) - Distributor code GU: L-58T370B0020		
112.014		- Šablon za cilindričnu šarku (Rollenband AT FEAL) -Dr. Hahn - otvaranje vani (za obradu profila rama i krila) - Oznaka distributera GU: L-58T370B0019 - Drilling jig for the barrel door hinge (Rollenband AT FEAL) - Dr. Hahn - outward opening (for processing of the frame and leaf profile) - Distributor code GU: L-58T370B0019		
115.016.01 02 03		- Skrivena šarka FEAL-GIESSE za vrata otvaranje unutra - Oznaka proizvođača Giesse: 00750410 -bijela 00750020 -siva 00750500 -crna - Boje: 01- bijela; 02 - siva; 03 - crna - Hide door hinge FEAL-GIESSE (door - inward opening) - Manufacturer code Giesse: 00750410 -white 00750020 -gray 00750500 -black - Color: 01- white; 02 - gray;03 - black	Al.	

Oznaka Code	Izgled-presjek View-cross section	Opis Description	Materijal Material	Napomena Remark
112.015.01 .10		- Dvodijelna šarka OSNO 65 (Türband 4 AT) (bez anker vijaka) - Oznaka proizvođača Dr. Hahn: M901G0477- bijela, bijeli čepovi M90110477 - EV1, crni čepovi - Boje: 01- bijela, bijeli čepovi, 10- EV1, crni čepovi - Two-piece hinge axial distance 65 (Türband 4 AT) (without anchor screws) - Manufacturer code Dr. Hahn: M901G0477 - white, white PVC parts M90110477 - EV1, black PVC parts - Color: 01-white, white PVC parts, 10-EV1, black PVC parts	Al.	
112.016		- Šablon za dvodijelnu šarku OSNO 65 (Türband 4 AT) - Oznaka proizvođača Dr. Hahn: T101A0000 - Drilling jig for two-piece hinge, axial distance 65 (Türband 4 AT) - Manufacturer code Dr. Hahn: T101A0000		
112.017.01 .10		- Trodijelna šarka OSNO 65 (Türband 4 AT) (bez anker vijaka) - Oznaka proizvođača Dr. Hahn: M951G0477 - bijela, bijeli čepovi: M95110477 - EV1, crni čepovi - Boje: 01-bijela, bijeli PVC dijelovi, 10-EV1, crni PVC dijelovi - Three-piece hinge axial distance 65 (Türband 4 AT) (without anchor screws) - Manufacturer code Dr. Hahn: M951G0477 - white, white PVC parts M95110477 - EV1, black PVC parts - Color: 01-white, white PVC parts, 10-EV1, black PVC parts	Al.	
112.018		- Šablon za trodijelnu šarku OSNO 65 (Türband 4 AT) - Oznaka proizvođača Dr. Hahn: T151A0000 - Drilling jig for three-piece hinge axial distance 65 (Türband 4 AT) - Manufacturer code Dr. Hahn: T101A0000		
112.019.01 .10		- Dvodijelna šarka OSNO 91.5 (Türband 4 AT) (bez anker vijaka) - Oznaka proizvođača Dr. Hahn: M905G0477 - bijela, bijeli čepovi: M90510477 - EV1, crni čepovi - Boje: 01-bijela, bijeli PVC dijelovi, 10-EV1, crni PVC dijelovi - Two-piece hinge axial distance 91.5 (Türband 4 AT) (without anchor screws) - Manufacturer code Dr. Hahn: M905G0477 - white, white PVC parts M90510477 - EV1, black PVC parts - Color: 01-white, white PVC parts, 10-EV1, black PVC parts	Al.	

Oznaka Code	Izgled-presjek View-cross section	Opis Description	Materijal Material	Napomena Remark
112.020		- Šablon za dvodijelnu šarku OSNO 91.5 (Türband 4 AT) - Oznaka proizvođača Dr. Hahn: T105A0000 - Drilling jig for two-piece hinge axial distance 91.5 (Türband 4 AT) - Manufacturer code Dr. Hahn: T105A0000		
112.024		- Anker vijak 74 mm (Türband 4 AT) 4 vijka u vrećici - Oznaka proizvođača Dr. Hahn: VP02A0019 - Anchor screw 74 mm (Türband 4 AT) 4 screws - Manufacturer code Dr. Hahn: VP02A0019	Čelik Steel	

SIGURNOSNA BRAVA 35 mm i 45 mm S TRI MJESTA KLJUČANJA - GU SECURY (MR2) - čelik
SAFETY LOCK 35 mm and 45 mm WITH 3 LOCKING POINTS - GU SECURY (MR2) - steel

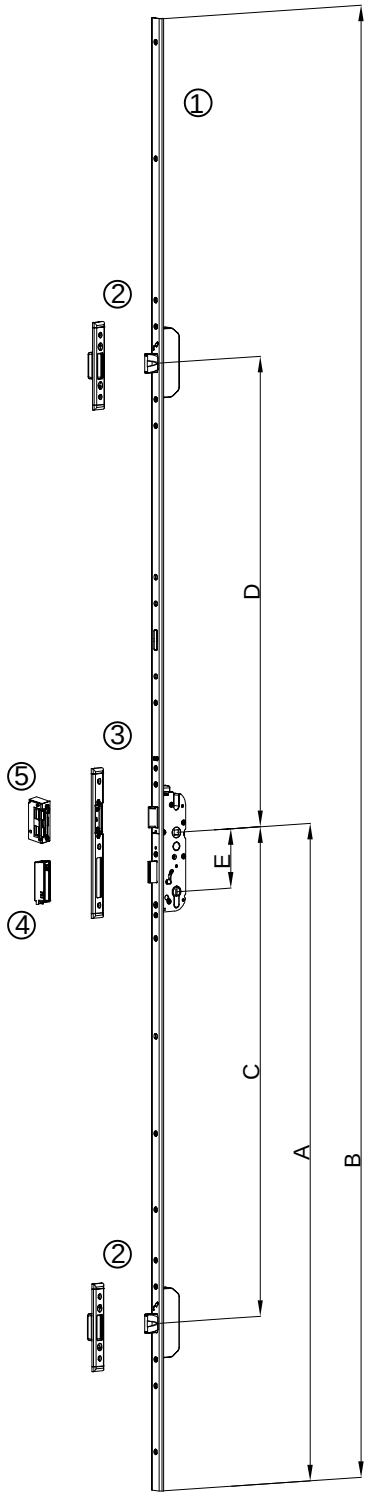




Okov za visine krila 1892 - 2209 mm
Hardware for leaf heights 1892 - 2209 mm

1) Brava GU Secury s masivnim zasunima (MR2)
Multipoint lock with massive bolts GU Secury (MR2)

Oznaka FEAL Code FEAL	Dubina Depth	Potisna ploča Push plate	Visina ručke (A) Handle height (A)	Rastojanje (E) Distance (E)	Četvrtka Quarter	Visina brave (B) Lock height (B)	(C)	(D)	Oznaka proizvođača Manufacturer code
122.016	35	[24x6	1020	92	□8	2285	760	730	6-31542-17-0-1
122.015	45	[24x6	1020	92	□8	2285	760	730	6-31531-17-0-1



2) **122.065**
Prihvatna pločica (U) 24x6 mm
- oznaka proizvođača GU:
6-40032-AC-0-1
Striking plate (U) 24x6 mm
- manufacturer code GU:
6-40032-AC-0-1

3) **122.064** (lijevi) ; **122.063** (desni)
Prihvatni lim (U) 24x6 mm,
- oznaka proizvođača GU:
6-37367-01-L-1 (lijevi);
6-37367-01-R-1 (desni)
122.064 (left) ; **122.063** (right)
Striking plate (U) 24x6 mm,
- manufacturer code GU:
6-37367-01-L-1 (left);
6-37367-01-R-1 (right)

4) **122.030**
Kućište zasuna brave (62 mm)
- oznaka proizvođača GU:
9-48553-03-0-6.....(Element po želji)
Latch bolt casement (62 mm).
- manufacturer code GU:
9-48553-03-0-6.....(Optional part)

5) **122.088**
Elektro otvarač vrata
GU ET8 9-24V,AC/DC, s klizačem za jezičak
- oznaka proizvođača GU: 6-35805-02-0-1
(Elektro otvarač se koristi po želji)
Electrical door opener
GU ET8 9-24V,AC/DC,with latch slide cover
- manufacturer code GU: 6-35805-02-0-1
(Electrical door opener is optional)

Dodatni okov za visine krila 2210-2409 mm
Additional hardware for leaf heights 2210-2409 mm

6) **122.102**
Secury produžetak brave MR2/24x6/300 mm
(dodatno gornje ključanje za visine krila 2210-2409mm)
- oznaka proizvođača GU: 6-39751-15-0-1 (Element po želji)
Secury lock extension MR2/24x6/500 mm
(additional upper locking for leaf heights 2210-2409 mm
- manufacturer code GU: 6-39751-15-0-1 (Optional part)

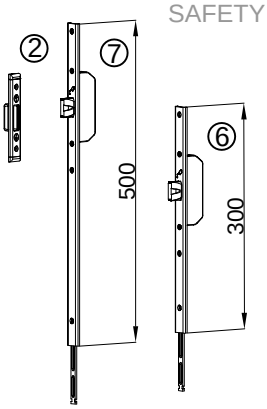
2) **122.065**
Prihvatna pločica (U) 24x6 mm
- oznaka proizvođača GU:
6-40032-AC-0-1
Striking plate (U) 24x6 mm
- manufacturer code GU:
6-40032-AC-0-1

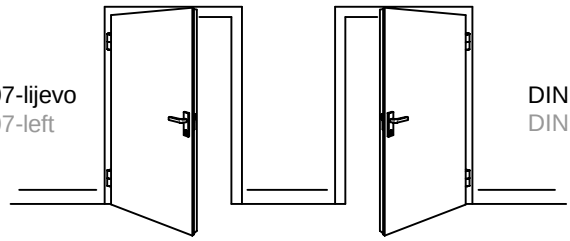
Dodatni okov za visine krila 2410-2800 mm
Additional hardware for leaf heights 2410-2800 mm

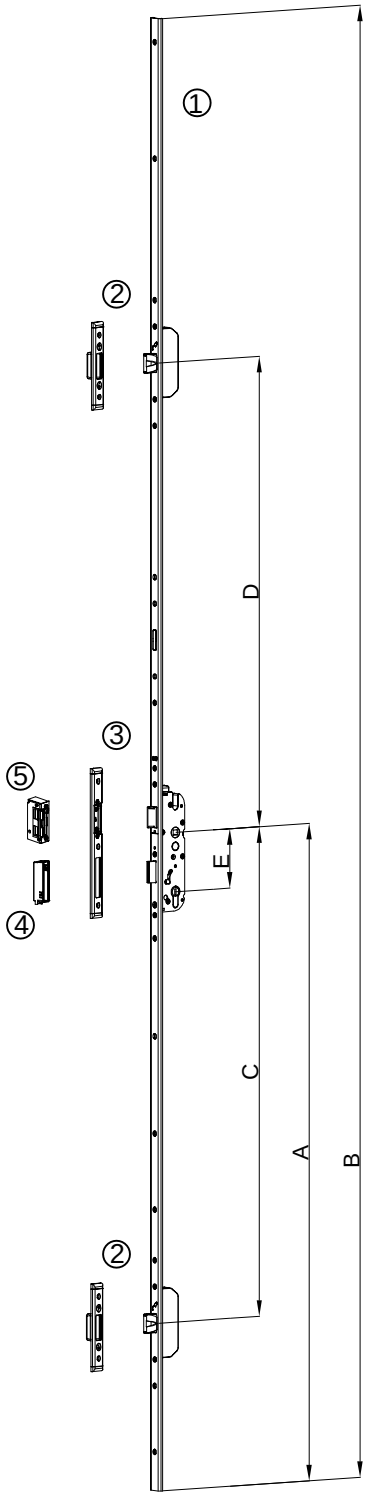
7) **122.083**
Secury produžetak brave MR2/24x6/500 mm
(dodatno gornje ključanje za visine krila 2410-2800 mm)
- oznaka proizvođača GU: 6-37395-15-0-1 (Element po želji)
Secury lock extension MR2/24x6/500 mm
(additional upper locking for leaf heights 2410-2800 mm
- manufacturer code GU: 6-37395-15-0-1 (Optional part)

2) **122.065**
Prihvatna pločica (U) 24x6 mm
- oznaka proizvođača GU:
6-40032-AC-0-1
Striking plate (U) 24x6 mm
- manufacturer code GU:
6-40032-AC-0-1

SIGURNOSNA BRAVA 35 mm i 45 mm S TRI MJESTA KLJUČANJA - GU SECURY (MR2) - inox*
SAFETY LOCK 35 mm and 45 mm WITH 3 LOCKING POINTS - GU SECURY (MR2) - inox*







Okov za visine krila 1892 - 2209 mm
Hardware for leaf heights 1892 - 2209 mm

1) Brava GU Secury s masivnim zasunima (MR2)
Multipoint lock with massive bolts GU Secury (MR2)

Oznaka FEAL Code FEAL	Dubina Depth	Potisna ploča Push plate	Visina ručke (A) Handle height (A)	Rastojanje (E) Distance (E)	Četvrtka Quarter	Visina brave (B) Lock height (B)	(C)	(D)	Oznaka proizvođača Manufacturer code
122.114	35	[24x6	1020	92	□8	2285	760	730	6-31542-17-0-8
122.115	45	[24x6	1020	92	□8	2285	760	730	6-31531-17-0-8

2) **122.128**
Prihvatna pločica (U) 24x6 mm
- oznaka proizvođača GU:
6-40032-AC-0-8
Striking plate (U) 24x6 mm
- manufacturer code GU:
6-40032-AC-0-8

3) **122.130** (lijevi) ; **122.129** (desni)
Prihvatni lim (U) 24x6 mm,
- oznaka proizvođača GU:
6-37367-01-L-8 (lijevi);
6-37367-01-R-8 (desni)
122.130 (left) ; **122.129** (right)
Striking plate (U) 24x6 mm,
- manufacturer code GU:
6-37367-01-L-8 (left);
6-37367-01-R-8 (right)

4) **122.030**
Kućište zasuna brave (62 mm)
- oznaka proizvođača GU:
9-48553-03-0-6.....(Element po želji)
Latch bolt casement (62 mm).
- manufacturer code GU:
9-48553-03-0-6.....(Optional part)

5) **122.088**
Elektro otvarač vrata
GU ET8 9-24V,AC/DC, s klizačem za jezičak
- oznaka proizvođača GU: 6-35805-02-0-1
(Elektro otvarač se koristi po želji)
Electrical door opener
GU ET8 9-24V,AC/DC,with latch slide cover
- manufacturer code GU: 6-35805-02-0-1
(Electrical door opener is optional)

Dodatni okov za visine krila 2210-2409 mm
Additional hardware for leaf heights 2210-2409 mm

6) **122.120**
Secury produžetak brave MR2/24x6/300 mm
(dodatno gornje ključanje za visine krila 2210-2409mm)
- oznaka proizvođača GU: 6-39751-15-0-8 (Element po želji)
Secury lock extension MR2/24x6/500 mm
(additional upper locking for leaf heights 2210-2409 mm
- manufacturer code GU: 6-39751-15-0-8 (Optional part)

2) **122.128**
Prihvatna pločica (U) 24x6 mm
- oznaka proizvođača GU:
6-40032-AC-0-8
Striking plate (U) 24x6 mm
- manufacturer code GU:
6-40032-AC-0-8

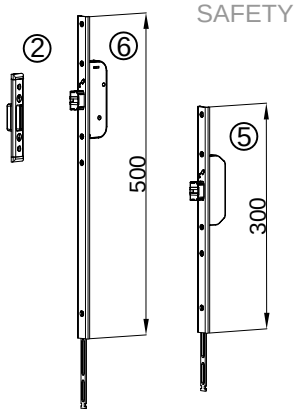
Dodatni okov za visine krila 2410-2800 mm
Additional hardware for leaf heights 2410-2800 mm

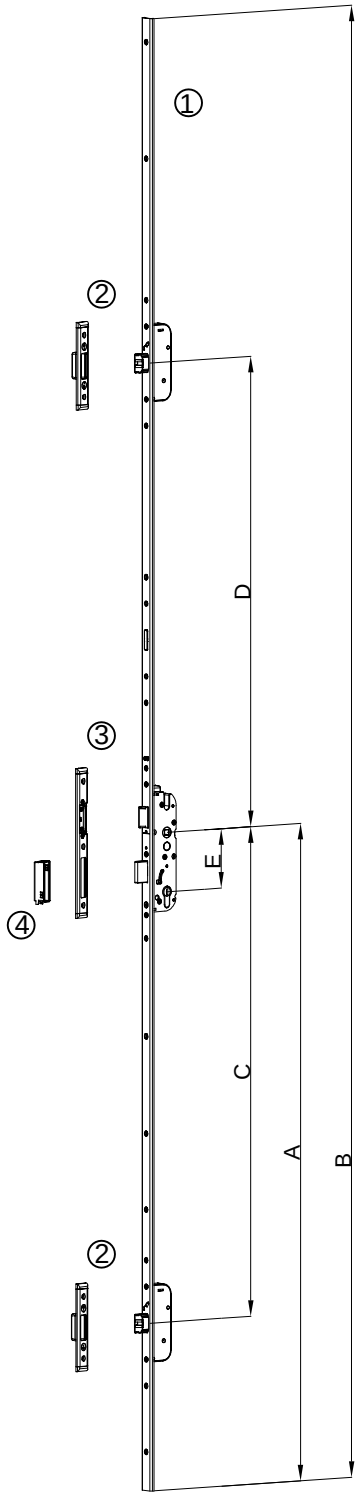
7) **122.122**
Secury produžetak brave MR2/24x6/500 mm
(dodatno gornje ključanje za visine krila 2410-2800 mm)
- oznaka proizvođača GU: 6-37395-15-0-8 (Element po želji)
Secury lock extension MR2/24x6/500 mm
(additional upper locking for leaf heights 2410-2800 mm
- manufacturer code GU: 6-37395-15-0-8 (Optional part)

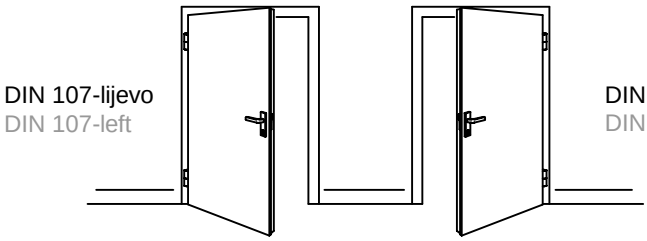
2) **122.128**
Prihvatna pločica (U) 24x6 mm
- oznaka proizvođača GU:
6-40032-AC-0-8
Striking plate (U) 24x6 mm
- manufacturer code GU:
6-40032-AC-0-8

* Preporučuje se korištenje u uvjetima gdje je potrebna visoka antikorozivna zaštita.
* Recommended for use in conditions where high corrosion protection is required.

SIGURNOSNA BRAVA 35mm i 45mm S TRI MJESTA KLJUČANJA - GU SECURY (SECA) - čelik
SAFETY LOCK 35mm and 45 mm WITH 3 LOCKING POINTS - GU SECURY (SECA) - steel







Okov za visine krila 1892 - 2209 mm
Hardware for leaf heights 1892 - 2209 mm

1) Brava GU Secury s automatskim zasunima (SECA)
Multipoint lock with automatic bolts GU Secury (SECA)

Oznaka FEAL Code FEAL	Dubina Depth	Potisna ploča Push plate	Visina ručke (A) Handle height (A)	Rastojanje (E) Distance (E)	Četvrtka Quarter	Visina brave (B) Lock height (B)	(C)	(D)	Oznaka proizvođača Manufacturer code
122.020	35	[24x6	1020	92	□8	2285	760	730	6-28480-31-0-1
122.019	45	[24x6	1020	92	□8	2285	760	730	6-28484-31-0-1

2) **122.065**
Prihvatna pločica (U) 24x6 mm
- oznaka proizvođača GU:
6-40032-AC-0-1
Striking plate (U) 24x6 mm
- manufacturer code GU:
6-40032-AC-0-1

3) **122.064** (lijevi) ; **122.063** (desni)
Prihvatni lim (U) 24x6 mm,
- oznaka proizvođača GU: 6-37367-01-L-1 (lijevi);
6-37367-01-R-1 (desni)
122.064 (left) ; **122.063** (right)
Striking plate (U) 24x6 mm,
- manufacturer code GU: 6-37367-01-L-1 (left);
6-37367-01-R-1 (right)

4) **122.030**
Kućište zasuna brave (62 mm)
- oznaka proizvođača GU:
9-48553-03-0-6 (Element po želji)
Latch bolt casement (62 mm).
- manufacturer code GU:
9-48553-03-0-6 (Optional part)

Dodatni okov za visine krila 2210-2409 mm
Additional hardware for leaf heights 2210-2409 mm

5) **122.103**
Secury produžetak brave SECA/24x6/300 mm
(dodatno gornje ključanje za visine krila 2210-2409mm)
- oznaka proizvođača GU: 6-39750-15-0-1 (Element po želji)
Secury lock extension SECA/24x6/300 m
(additional upper locking for leaf heights 2210-2409 mm
- manufacturer code GU: 6-39750-15-0-1 (Optional part)

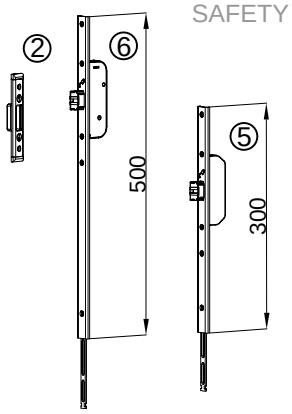
2) **122.065**
Prihvatna pločica (U) 24x6 mm
- oznaka proizvođača GU:
6-40032-AC-0-1
Striking plate (U) 24x6 mm
- manufacturer code GU:
6-40032-AC-0-1

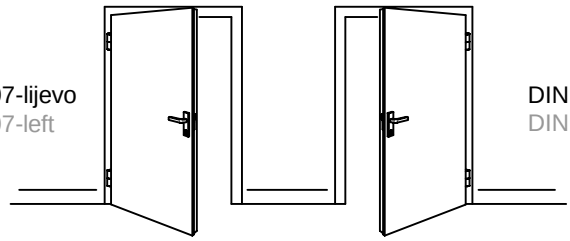
Dodatni okov za visine krila 2410-2800 mm
Additional hardware for leaf heights 2410-2800 mm

6) **122.084**
Secury produžetak brave SECA/24x6/500 mm
(dodatno gornje ključanje za visine krila 2410-2800 mm)
- oznaka proizvođača GU: 6-37394-15-0-1 (Element po želji)
Secury lock extension SECA/24x6/500 mm
(additional upper locking for leaf heights 2410-2800 mm
- manufacturer code GU: 6-37394-15-0-1 (Optional part)

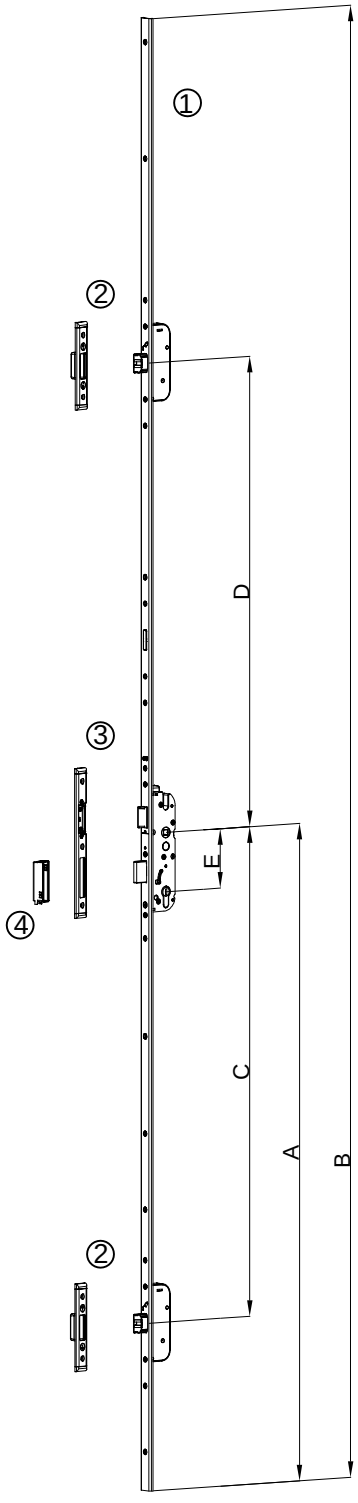
2) **122.065**
Prihvatna pločica (U) 24x6 mm
- oznaka proizvođača GU:
6-40032-AC-0-1
Striking plate (U) 24x6 mm
- manufacturer code GU:
6-40032-AC-0-1

SIGURNOSNA BRAVA 35 mm i 45 mm S TRI MJESTA KLJUČANJA - GU SECURY (SECA) - inox*
SAFETY LOCK 35 mm and 45 mm WITH 3 LOCKING POINTS - GU SECURY (SECA) - inox*





Okov za visine krila 1892 - 2209 mm
Hardware for leaf heights 1892 - 2209 mm



1) Brava GU Secury s automatskim zasunima (SECA)
Multipoint lock with automatic bolts GU Secury (SECA)

Oznaka FEAL Code FEAL	Dubina Depth	Potisna ploča Push plate	Visina ručke (A) Handle height (A)	Rastojanje (E) Distance (E)	Četvrtka Quarter	Visina brave (B) Lock height (B)	(C)	(D)	Oznaka proizvođača Manufacturer code
122.116	35	[24x6	1020	92	□8	2285	760	730	6-28480-31-0-8
122.117	45	[24x6	1020	92	□8	2285	760	730	6-28484-31-0-8

2) **122.128**
Prihvatna pločica (U) 24x6 mm
- oznaka proizvođača GU:
6-40032-AC-0-8
Striking plate (U) 24x6 mm
- manufacturer code GU:
6-40032-AC-0-8

3) **122.130** (Lijevi) ; **122.129** (desni)
Prihvatni lim (U) 24x6 mm,
- oznaka proizvođača GU: 6-37367-01-L-8 (lijevi);
6-37367-01-R-8 (desni)
122.130 (left) ; **122.129** (right)
Striking plate (U) 24x6 mm,
- manufacturer code GU: 6-37367-01-L-8 (left);
6-37367-01-R-8 (right)

4) **122.030**
Kućište zasuna brave (62 mm)
- oznaka proizvođača GU:
9-48553-03-0-6 (Element po želji)
Latch bolt casement (62 mm).
- manufacturer code GU:
9-48553-03-0-6 (Optional part)

Dodatni okov za visine krila 2210-2409 mm
Additional hardware for leaf heights 2210-2409 mm

5) **122.121**
Secury produžetak brave SECA/24x6/300 mm
(dodatno gornje ključanje za visine krila 2210-2409 mm)
- oznaka proizvođača GU: 6-39750-15-0-8 (Element po želji)
Secury lock extension SECA/24x6/300 m
(additional upper locking for leaf heights 2210-2409 mm
- manufacturer code GU: 6-39750-15-0-8 (Optional part)

2) **122.128**
Prihvatna pločica (U) 24x6 mm
- oznaka proizvođača GU:
6-40032-AC-0-8
Striking plate (U) 24x6 mm
- manufacturer code GU:
6-40032-AC-0-8

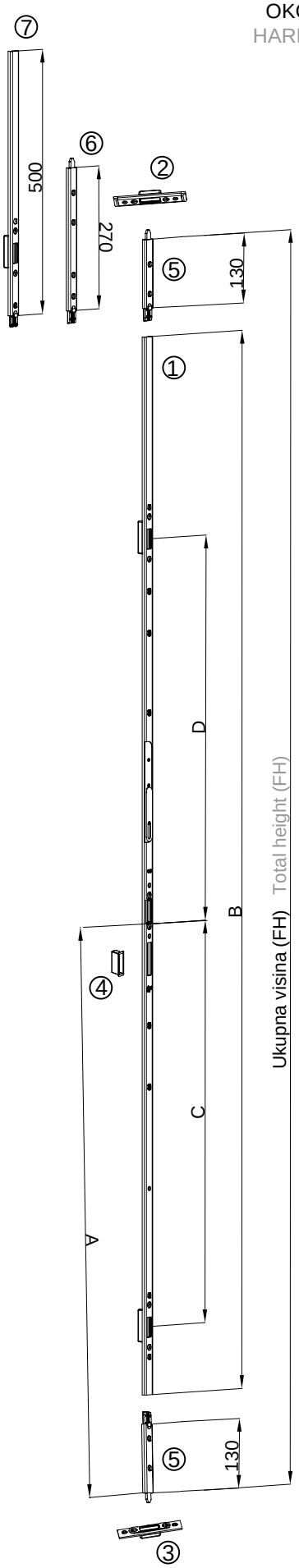
Dodatni okov za visine krila 2410-2800 mm
Additional hardware for leaf heights 2410-2800 mm

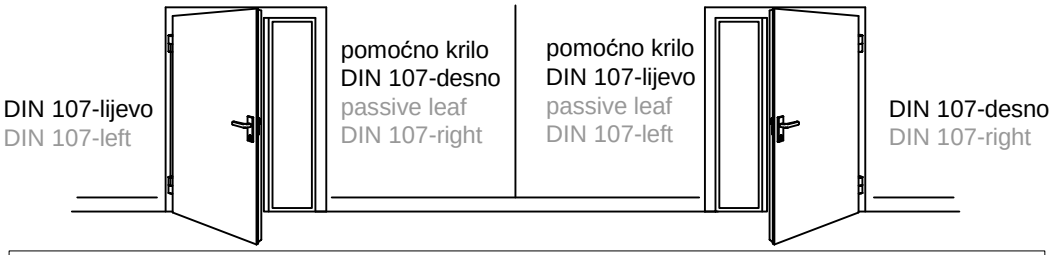
6) **122.123**
Secury produžetak brave SECA/24x6/500 mm
(dodatno gornje ključanje za visine krila 2410-2800 mm)
- oznaka proizvođača GU: 6-37394-15-0-8 (Element po želji)
Secury lock extension SECA/24x6/500 mm
(additional upper locking for leaf heights 2410-2800 mm
- manufacturer code GU: 6-37394-15-0-8 (Optional part)

2) **122.128**
Prihvatna pločica (U) 24x6 mm
- oznaka proizvođača GU:
6-40032-AC-0-8
Striking plate (U) 24x6 mm
- manufacturer code GU:
6-40032-AC-0-8

* Preporučuje se korištenje u uvjetima gdje je potrebna visoka antikorozivna zaštita.
* Recommended for use in conditions where high corrosion protection is required.

OKOV ZA KLJUČANJE POMOĆNOG KRILA ZA BRAVE MR2 I SECA
HARDWARE FOR LOCKING OF PASSIVE LEAF FOR LOCK MR2 AND SECA





Okov za ključanje pomoćnog krila za visine krila 2030 - 2286 mm
Hardware for locking of passive leaf for leaf heights 2030 - 2286 mm

1) Brava za ključanje pomoćnog krila
Multipoint lock with massive bolts GU Secury (MR2)

Oznaka FEAL Code FEAL	DIN smjer* DIN direction*	Potisna ploča Push plate	Zračnost Groove	Visina ručke (A) Handle height (A)	Visina brave (B) Lock height (B)	(C)	(D)	Oznaka proizvođača Manufacturer code
122.025	Lijevo Left	[24x8	12	1020	2000	760	730	6-37900-32-L-1
122.082	Desno Right	[24x8	12	1020	2000	760	730	6-37900-32-R-1

2) **122.065 (čelik); 122.128 (inox)**
Gornja prihvatna pločica (U) 24x6 mm
- oznaka proizvođača GU: 6-40032-AC-0-1 (čelik)
6-40032-AC-0-8 (inox)
Top striking plate (U) 24x6 mm
- manufacturer code GU:6-40032-AC-0-1 (steel)
6-40032-AC-0-8 (inox)

3) **122.080**
Donja prihvatna pločica (ravna) 24x3 mm
- oznaka proizvođača GU: 6-40032-DR-0-1
Bottom striking plate (flat) 24x3 mm
- manufacturer code GU:6-40032-DR-0-1

4) **122.087**
Kućište jezička brave
- oznaka proizvođača GU: 9-43952-01-0-6
Latch bolt casement
- manufacturer code GU:9-43952-01-0-6

5) **122.027** - Element za nastavljanje (130 mm)
- oznaka proizvođača GU: 6-35765-01-0-1
(ugrađuje se gore i dolje)
Shoot bolt unit (130 mm)
- manufacturer code GU: 6-35765-01-0-1
(montage on top and bottom)

Nastavci za ključanje pomoćnog krila za visine krila 2287 - 2329 mm
Shoot bolt units for locking of passive leaf for leaf heights 2287 - 2329 mm

6) **122.026 -** Element za nastavljanje (270 mm)
- oznaka proizvođača GU: 6-35765-41-0-1 ;
(ugrađuje se gore)
Shoot bolt unit (270 mm),
- manufacturer code GU: 6-35765-41-0-1 ; (montage on top)

5) **122.027** - (ugrađuje se dolje)
- (montage on bottom)

Nastavci i produžetak za ključanje pomoćnog krila za visine krila 2330 - 2529 mm
Shoot bolt units and lock extension for locking of passive leaf for leaf heights 2330 - 2529

5) **122.027** - (ugrađuje se gore i dolje)
- (montage on top and bottom)

7) **122.085 (lijevi) (left); 122.086 (desni) (right)**
Produžetak brave za pomoćno krilo 500 mm/U24x8/500NL1
- oznaka proizvođača GU:
6-37596-32-L-1 (lijevi), 6-37596-32-R-1 (desni)
Lock extension for passive leaf 500 mm/U24x8/500NL1
- manufacturer code GU:
6-37596-32-L-1 (left), 6-37596-32-R-1 (right)

Napomena:
Za visine krila od 2330 do 2529 mm potrebno je na glavno krilo postaviti produžetak brave od 300 mm 122.102 (MR2) ili 122.103 (SECA)
Remark:
For leaf heights 2330 - 2529, it is necessary to mount lock extension of 300 mm 122.102 (MR2) or 122.103 (SECA) on the active leaf

Nastavci i produžetak za ključanje pomoćnog krila za visine krila 2530 - 2800 mm
Shoot bolt units and lock extension for locking of passive leaf for leaf heights 2530 - 2800

5) **122.027** - (dolje, gore za visine 2530-2786 mm),
- (bottom, on top for heights 2530-2786 mm)

6) 122.026 - (gore za visine 2787-2800 mm)
- (on top for heights 2787-2800 mm)

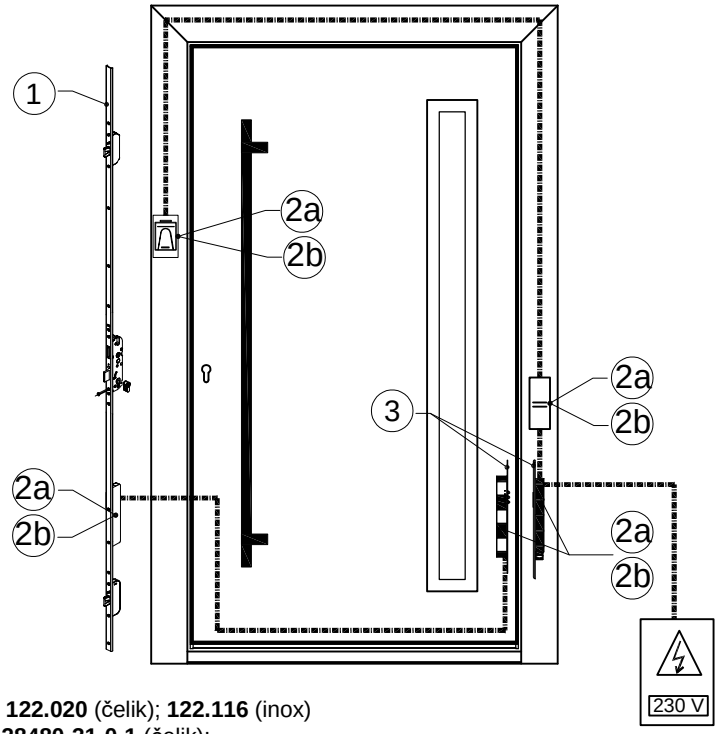
7) **122.085 (lijevi) (left); 122.086 (desni) (right)**

Napomena: Za visine krila iznad 2529 mm, potrebno je na glavno krilo postaviti produžetak brave 500 mm 122.083 (MR2) ili 122.084 (SECA)
Remark: For leaf heights above 2529 mm it is necessary to mount lock extension of 500 mm 122.083 (MR2) or 122.084 (SECA) on the active leaf

* Smjer otvaranja pomoćnog krila
* Passive leaf opening direction

Automatski kontroliran pristup ulaznim vratima s integriranjem upravljačke jedinice u okvir vrata (GU)

Automatically controlled access to the entrance door with the integration of the control unit into the door frame (GU)



1 Brava GU (SECA) - 35 mm **122.020** (čelik); **122.116** (inox)
oznaka proizvođača GU: **6-28480-31-0-1** (čelik);
6-28480-31-0-8 (inox)

Brava GU (SECA) - 45 mm **122.019** (čelik); **122.117** (inox)
oznaka proizvođača GU: **6-28484-31-0-1** (čelik)**;**
6-28484-31-0-8 (inox)

2a **142.059** - Set za automatski kontroliran pristup ulaznim vratima sa skenerom prstiju u okviru vrata
oznaka proizvođača GU: **H-01440-14-0-0**

- Set Secury A-offner elektro motor
  oznaka proizvođača GU: K-18153-01-0-0
- Secureconnect 200/prijenosnik napona i podataka
  oznaka proizvođača GU: B-55600-20-4-6
- Upravljačka jedinica (**skener prstiju** u okviru vrata) - Idencom
  oznaka proizvođača GU: B-55600-23-4-8
- Relej za ugradnju na okvir
  oznaka proizvođača GU: B-55600-21-4-6

2b **142.060** - Set za automatski kontroliran pristup ulaznim vratima s tipkovnicom u okviru vrata
oznaka proizvođača GU: **H-01440-24-0-0**

- Set Secury A-offner elektro motor
  oznaka proizvođača GU: K-18153-01-0-0
- Secureconnect 200/prijenosnik napona i podataka
  oznaka proizvođača GU: B-55600-20-4-6
- Upravljačka jedinica (**tipkovnica** u okviru vrata) - Idencom
  oznaka proizvođača GU: B-55600-20-4-8
- Relej za ugradnju na okvir
  oznaka proizvođača GU: B-55600-21-4-6

3 Prihvatnik na krilu i ramu za Secureconnect 200
142.014 (čelik); **142.065** (inox) (potrebna 2 komada)
oznaka proizvođača GU: **6-35515-04-0-1** (čelik);
6-35515-04-0-8 (inox)

1 Multipoint lock GU (SECA) - 35 mm **122.020** (steel); **122.116** (inox)
manufacturer code GU: **6-28480-31-0-1** (steel);
6-28480-31-0-8 (inox)

Multipoint lock GU (SECA) - 45 mm **122.019** (steel); **122.117** (inox)
manufacturer code GU: **6-28484-31-0-1** (steel);
6-28484-31-0-8 (inox)

2a **142.059** - Set for automatically controlled access to the entrance door with fingerprint scanner in the door frame
manufacturer code GU: **H-01440-14-0-0**

- Set Secury A-offner electric motor
  manufacturer code GU: K-18153-01-0-0
- Secureconnect 200/power and date transmission unit
  manufacturer code GU: B-55600-20-4-6
- Control unit (**fingerprint scanner** in the door frame) - Idencom
  manufacturer code GU: B-55600-23-4-8
- Relay for installation in frame
  manufacturer code GU: B-55600-21-4-6

2b **142.060** - Set for automatically controlled access to the entrance door with code keypad in the door frame
manufacturer code GU: **H-01440-24-0-0**

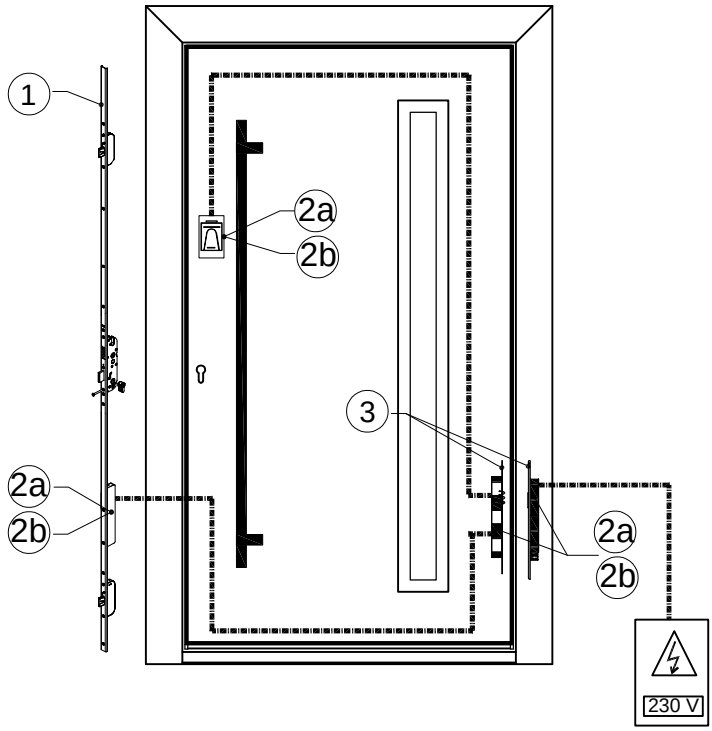
- Set Secury A-offner electric motor
  manufacturer code GU: K-18153-01-0-0
- Secureconnect 200/power and data transmission unit
  manufacturer code GU: B-55600-20-4-6
- Control unit (**code keypad** in the door frame) - Idencom
  manufacturer code GU: B-55600-20-4-8
- Relay for installation in the door frame
  manufacturer code GU: B-55600-21-4-6

3 Acceptor for Secureconnect 200
142.014 (steel); **142.065** (inox) (2 pieces are required**)**
manufacturer code GU: **6-35515-04-0-1** (steel)**;**
6-35515-04-0-8 (inox)

Napomena:
Prilikom odabira seta za automatski kontroliran pristup potrebno je odabrati jedan od dva ponuđena seta, tj. set sa skenerom prstiju (2a) ili set s tipkovnicom (2b).
Note:
When choosing a set for automatic controlled access, it is necessary to choose one of the two offered sets, i.e. set with finger scanner (2a) or set with code keypad (2b).

Automatski kontroliran pristup ulaznim vratima s integriranjem upravljačke jedinice u krilo vrata (GU)

Automatically controlled access to the entrance door with the integration of the control unit into the door sash (GU)



1 Brava GU (SECA) - 35 mm **122.020** (čelik); **122.116** (inox)
oznaka proizvođača GU: **6-28480-31-0-1** (čelik);
6-28480-31-0-8 (inox)
Brava GU (SECA) - 45 mm **122.019** (čelik); **122.117** (inox)
oznaka proizvođača GU: **6-28484-31-0-1** (čelik)**;**
6-28484-31-0-8 (inox)

2a **142.061** - Set za automatski kontroliran pristup ulaznim vratima sa skenerom prstiju u krilu vrata
oznaka proizvođača G-U: **H-01440-01-0-0**

- Set Secury A-offner elektro motor
  oznaka proizvođača GU: K-18153-01-0-0
- Secureconnect 200/prijenosnik napona i podataka
  oznaka proizvođača GU: B-55600-20-4-6
- Upravljačka jedinica (**skener prstiju** u krilu vrata) - Idencom
  oznaka proizvođača GU: B-55600-23-4-8

2b **142.062** - Set za automatski kontroliran pristup ulaznim vratima s tipkovnicom u krilu vrata
oznaka proizvođača GU: **H-01440-51-0-0**

- Set Secury A-offner elektro motor
  oznaka proizvođača GU: K-18153-01-0-0
- Secureconnect 200/prijenosnik napona i podataka
  oznaka proizvođača GU: B-55600-20-4-6
- Upravljačka jedinica (**tipkovnica** u krilu vrata) - Idencom
  oznaka proizvođača GU: B-55600-20-4-8

3 Prihvatnik na krilu i ramu za Secureconnect 200
142.014 (čelik); **142.065** (inox) (potrebna 2 komada)
oznaka proizvođača GU: **6-35515-04-0-1** (čelik);
6-35515-04-0-8 (inox)

1 Multipoint lock GU (SECA) - 35 mm **122.020** (steel); **122.116** (inox)
manufacturer code GU: **6-28480-31-0-1** (steel);
6-28480-31-0-8 (inox)
Multipoint lock GU (SECA) - 45 mm **122.019** (steel); **122.117** (inox)
manufacturer code GU: **6-28484-31-0-1** (steel);
6-28484-31-0-8 (inox)

2a **142.061** - Set for automatically controlled access to the entrance door with fingerprint scanner in the door sash
manufacturer code GU: **H-01440-01-0-0**

- Set Secury A-offner electric motor
  manufacturer code GU: K-18153-01-0-0
- Secureconnect 200/power and date transmission unit
  manufacturer code GU: B-55600-20-4-6
- Control unit (**fingerprint scanner** in the door sash) - Idencom
  manufacturer code GU: B-55600-23-4-8

2b **142.062** - Set for automatically controlled access to the entrance door with code keypad in the door sash
manufacturer code GU: **H-01440-51-0-0**

- Set Secury A-offner electric motor
  manufacturer code GU: K-18153-01-0-0
- Secureconnect 200/power and data transmission unit
  manufacturer code GU: B-55600-20-4-6
- Control unit (**code keypad** in the door sash) - Idencom
  manufacturer code GU: B-55600-20-4-8

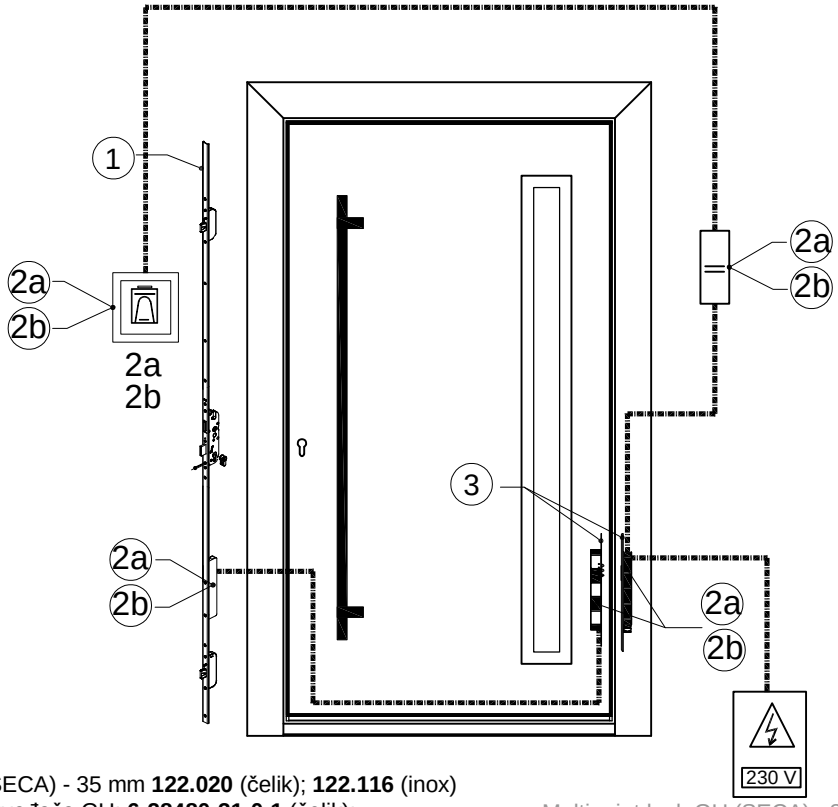
3 Acceptor for Secureconnect 200
142.014 (steel); **142.065** (inox) (2 pieces are required**)**
manufacturer code GU: **6-35515-04-0-1** (steel)**;**
6-35515-04-0-8 (inox)

Napomena:
Prilikom odabira seta za automatski kontroliran pristup potrebno je odabrati jedan od dva ponuđena seta, tj. set sa skenerom prstiju (2a) ili set s tipkovnicom (2b).

Note:
When choosing a set for automatic controlled access, it is necessary to choose one of the two offered sets, i.e. set with finger scanner (2a) or set with code keypad (2b).

Automatski kontroliran pristup ulaznim vratima s integriranjem upravljačke jedinice na zid (GU)

Automatically controlled access to the entrance door with the integration of the control unit into the wall (GU)



1 Brava GU (SECA) - 35 mm **122.020** (čelik); **122.116** (inox)
oznaka proizvođača GU: **6-28480-31-0-1** (čelik);
6-28480-31-0-8 (inox)

Brava GU (SECA) - 45 mm **122.019** (čelik); **122.117** (inox)
oznaka proizvođača GU: **6-28484-31-0-1** (čelik)**;**
6-28484-31-0-8 (inox)

2a **142.063** - Set za automatski kontroliran pristup ulaznim vratima sa skenerom prstiju na zidu
oznaka proizvođača GU: **H-01440-61-0-0**

- Set Secury A-offner elektro motor
  oznaka proizvođača GU: K-18153-01-0-0
- Secureconnect 200/prijenosnik napona i podataka
  oznaka proizvođača GU: B-55600-20-4-6
- Upravljačka jedinica (**skener prstiju** na zidu) - Idencom
  oznaka proizvođača GU: B-55600-23-1-8
- Relej za ugradnju na zid

2b **142.064** - Set za automatski kontroliran pristup ulaznim vratima s tipkovnicom na zidu
oznaka proizvođača GU: **H-01440-73-0-0**

- Set Secury A-offner elektro motor
  oznaka proizvođača GU: K-18153-01-0-0
- Secureconnect 200/prijenosnik napona i podataka
  oznaka proizvođača GU: B-55600-20-4-6
- Upravljačka jedinica (**tipkovnica** na zidu) - Idencom
  oznaka proizvođača GU: B-55600-20-1-8
- Relej za ugradnju u zid

3 Prihvatnik na krilu i ramu za Secureconnect 200
142.014 (čelik); **142.065** (inox) (potrebna 2 komada)
oznaka proizvođača GU: **6-35515-04-0-1** (čelik);
6-35515-04-0-8 (inox)

1 Multipoint lock GU (SECA) - 35 mm **122.020** (steel); **122.116** (inox)
manufacturer code GU: **6-28480-31-0-1** (steel);
6-28480-31-0-8 (inox)

Multipoint lock GU (SECA) - 45 mm **122.019** (steel); **122.117** (inox)
manufacturer code GU: **6-28484-31-0-1** (steel);
6-28484-31-0-8 (inox)

2a **142.063** - Set for automatically controlled access to the entrance door with fingerprint scanner on the wall
manufacturer code GU: **H-01440-61-0-0**

- Set Secury A-offner electric motor
  manufacturer code GU: K-18153-01-0-0
- Secureconnect 200/power and date transmission unit
  manufacturer code GU: B-55600-20-4-6
- Control unit (**fingerprint scanner** on the wall) - Idencom
  manufacturer code GU: B-55600-23-1-8
- Relay for installation in the wall

2b **142.064** - Set for automatically controlled access to the entrance door with code keypad on the wall
manufacturer code GU: **H-01440-73-0-0**

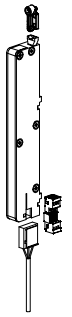
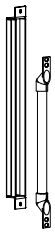
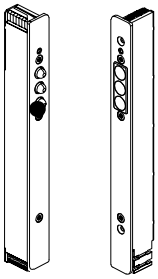
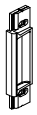
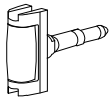
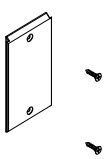
- Set Secury A-offner electric motor
  manufacturer code GU: K-18153-01-0-0
- Secureconnect 200/power and data transmission unit
  manufacturer code GU: B-55600-20-4-6
- Control unit (**code keypad** on the wall) - Idencom
  manufacturer code GU: B-55600-20-1-8
- Relay for installation in the wall

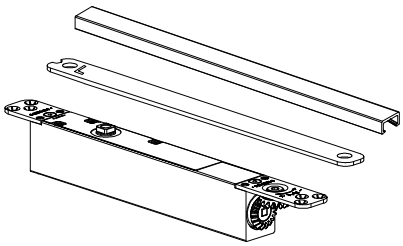
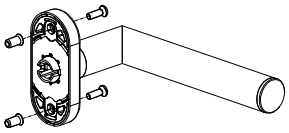
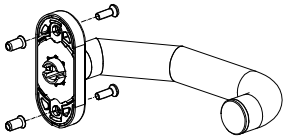
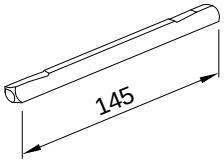
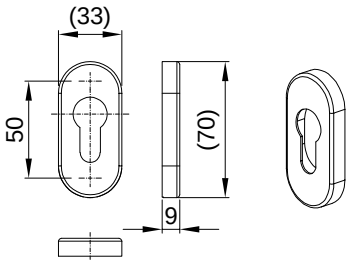
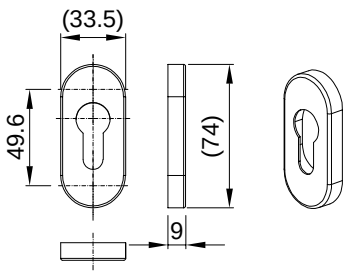
3 Acceptor for Secureconnect 200
142.014 (steel); **142.065** (inox) (2 pieces are required**)**
manufacturer code GU: **6-35515-04-0-1** (steel)**;**
6-35515-04-0-8 (inox)

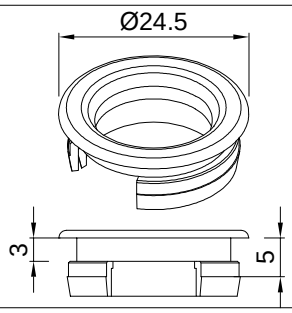
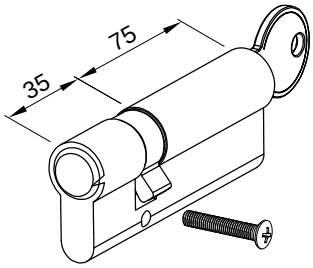
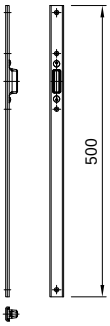
Napomena:
Prilikom odabira seta za automatski kontroliran pristup potrebno je odabrati jedan od dva ponuđena seta, tj. set sa skenerom prstiju (2a) ili set s tipkovnicom (2b).

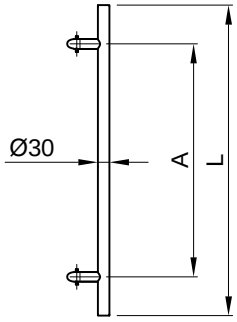
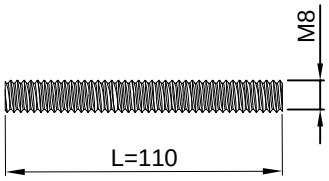
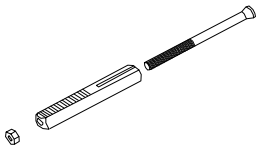
Note:
When choosing a set for automatic controlled access, it is necessary to choose one of the two offered sets, i.e. set with finger scanner (2a) or set with code keypad (2b).

DODACI ZA SIGURNOSNE BRAVE 35 mm i 45 mm S TRI MJESTA KLJUČANJA - GU SECURY (MR2 I SECA)
ACCESSORIES FOR SAFETY LOCKS 35 mm AND 45 mm WITH 3 LOCKING POINTS - GU SECURY (MR2 AND SECA)

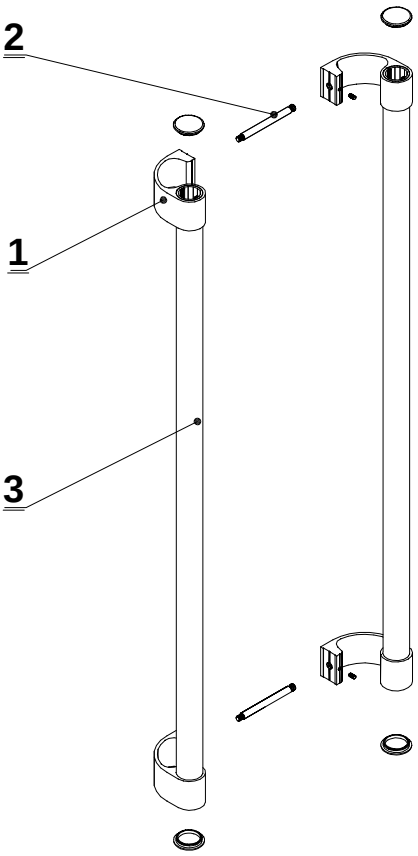
Oznaka Code	Izgled-presjek View-cross section	Opis Description	Materijal Material	Napomena Remark
142.056		- Set Secury A-offner Elektro motor (motorno otvaranje brave SECA) - Oznaka proizvođača GU: K-18153-01-0-0 - Set Secury A-offner electromotor (motorized opening for the SECA lock) - Manufacturer code GU: K-18153-01-0-0		
142.057		- Zaštita kabla 24x260x17 Ø10 do 100° otvaranje - Oznaka proizvođača GU: 6-29854-00-0-0 - Concealed cable duct 24x260x17 Ø10 up to 100° opening - Manufacturer code GU: 6-29854-00-0-0		
142.013		- Secureconnect 200/prijenosnik napona i podataka Oznaka proizvođača GU: B-55600-20-4-6 - Secureconnect 200/ power and data transmission unit Manufacturer code GU: B-55600-20-4-6		
122.042		- Prihvatni dio za valjak (za bravu MR2) - Oznaka proizvođača GU: K-15597-01-0-6 - Receiving part for the roller (for lock MR2) - Manufacturer code GU: K-15597-01-0-6	Al Pvc	
122.040		- Valjak za bravu 35 mm (MR2) - Oznaka proizvođača GU: 6-36144-35-0-1 A - Roller for lock 35 mm (MR2) - Manufacturer code GU: 6-36144-35-0-1 A		
122.041		- Valjak za bravu 45 mm (MR2) - Oznaka proizvođača GU: 6-36144-45-0-1 A - Roller for lock 45 mm (MR2) - Manufacturer code GU: 6-36144-45-0-1 A		
122.056		- Pločica za pravilno vođenje jezička brave kod aluminijskih vrata (otvaranje vani) - Oznaka proizvođača GU-BKS: K-19307-01-0-6 - Profile guard plate for aluminium doors (outward opening) - Manufacturer code GU-BKS: K-19307-01-0-6		

Oznaka Code	Izgled-presjek View-cross section	Opis Description	Materijal Material	Napomena Remark
142.018		- Skriveni zatvarač GU VTS 735+GS VTS 73x20x12 - Oznaka proizvođača GU: K-18758-00-0-1 - Concealed door closer GU VTS 735+GS VTS 73x20x12 - Manufacturer code GU: K-18758-00-0-1		
102.028		- Ručka za vrata s ovalnom rozetom serije BELCANTO H2.0 (s prihvatom četvrtke 8x8mm) - jednostrano ručka - Oznaka proizvođača GU-BKS: B-70130-63-0-8 - Završna obrada: Inox - Door handle with oval rosette serie BELCANTO H2.0 (for spindle 8x8mm) - half lever set - Manufacturer code GU-BKS: B-70130-63-0-8 - Finish: stainless steel		Naručuje se po komadu It is ordered per piece
102.029		- Ručka za vrata s ovalnom rozetom serije RONDO H1.1 (s prihvatom četvrtke 8 mm) - jednostrano ručka - Oznaka proizvođača GU-BKS: B-70130-61-0-8 - Završna obrada: Inox - Door handle with oval rosette serie RONDO H1.1 (for spindle 8x8mm) - half lever set - Manufacturer code GU-BKS: B-70130-61-0-8 - Finish: stainless steel		Naručuje se po komadu It is ordered per piece
102.025		- Četvrtka 8x8 mm - Oznaka proizvođača GU-BKS: B-78400-0O-0-1 (dužina četvrtke L=145 mm) - Square spindle 8x8 mm - Manufacturer code GU-BKS: B-78400-0O-0-1 (spindle length L=145 mm)		
122.098		- Ovalna rozeta za zaštitu cilindra serije BELCANTO - Oznaka proizvođača GU-BKS: B-72730-00-0-8 - Završna obrada: Inox - Oval rosette for cylinder protection BELCANTO series - Manufacturer code GU-BKS: B-72730-00-0-8 - Finish: stainless steel		Naručuje se po komadu It is ordered per piece
122.097		- Ovalna sigurnosna rozeta za zaštitu cilindra - Oznaka proizvođača GU-BKS: B-78820-0R-0-8 - Završna obrada: Inox - Oval security rosette for cylinder protection - Manufacturer code GU-BKS: B-78820-0R-0-8 - Finish: stainless steel		Naručuje se po komadu It is ordered per piece

Oznaka Code	Izgled-presjek View-cross section	Opis Description	Materijal Material	Napomena Remark
122.101		- Okrugla prstenasta rozeta za debljine profila do 5mm (za debljinu panela 3mm) - Oznaka proizvođača GU-BKS: L-58R25-05-0-8 -Round rosette for profile thickness up to 5 mm (for panel thickness up to 3 mm) - Manufacturer code GU-BKS: L-58R25-05-0-8	Inox	
122.095		- Uložak (cilindar) serije 88 - Oznaka proizvođača GU-BKS: B 8800 0560 (dužina cilindra 35-75mm) - Lock insert (cylinder) series 88 - Manufacturer code GU-BKS: B 8800 0560 (cylinder length 35-75mm)	Ni	
122.106		- Jednodijelna prihvatna ploča MR/SECA U 24x6, 2310/730/760 - lijeva - Oznaka proizvođača GU : 6-40033-FE-L-1 - One-piece striker MR/SECA U 24x6, 2310/730/760 - left - Manufacturer code GU: 6-40033-FE-L-1	Čelik Steel	
122.107		- Jednodijelna prihvatna ploča MR/SECA U 24x6, 2310/730/760 - desna - Oznaka proizvođača GU : 6-40033-FE-R-1 - One-piece striker MR/SECA U 24x6, 2310/730/760 - right - Manufacturer code GU: 6-40033-FE-R-1	Čelik Steel	
122.131		- Produžetak jednodijelne prihvatne ploče MR/SECA U 24x6, 500mm - Oznaka proizvođača GU: 6-40057-AC-0-1 - One-piece striker extension MR/SECA U 24x6, 500 mm - Manufacturer code: GU: 6-40057-AC-0-1	Čelik Steel	
122.105		- Prihvatni lim U24x6 fiksni (lijevi/desni) - Oznaka proizvođača GU : B-90000-26-0-8 - Striker U24x6 fixed (left/right) - Manufacturer code GU: B-90000-26-0-8	Inox	

Oznaka Code	Izgled-presjek View-cross section	Opis Description	Materijal Material	Napomena Remark
102.030		- Jednostrani kosi rukohvat L=800 mm, A=600 mm - Oznaka proizvođača GU-BKS: B-78820-0C-0-8 - Push/pull handle with sloping supports 45°, L=800 mm, A=600 mm - Manufacturer code GU-BKS: B-78820-0C-0-8	Inox	
102.031		- Navojna šipka L=110 mm za povezivanje dva jednostrana rukohvata (za dubinu krila 76-95 mm) - Oznaka proizvođača GU-BKS: B-78820-0J-0-8 - Set screw M8 for fastening on both sides L=110 mm (for door thickness 76-95 mm) - Manufacturer code GU-BKS: B-78820-0J-0-8		
102.026		- Četvrtka 8 mm za jednostranu ručku - Oznaka proizvođača GU: L-58PF04401Q08ZN07 (dužina četvrtke L=70 mm) - Square spindle 8 mm for one-sided door handle - Manufacturer code GU: L-58PF04401Q08ZN07 (square spindle length L=70 mm)		

RUKOHVAT ZA VRATA (OBOSTRANO)
DOOR PULL HANDLE (BOTH SIDES)



1. Art. **100.019** ..... kom 1
   Artikl sadržava:
   -nosač rukohvata, vanjski art. 391.182 kom 2
   -nosač rukohvata, unutarnji art. 391.181 kom 2
   -čep za profil rukohvata art. 375.075 kom 4
   -vijak imbus M6x10 DIN 914 art. 431.342 kom 2
   -vijak imbus M5x4 DIN 913 art. 431.805 kom 4

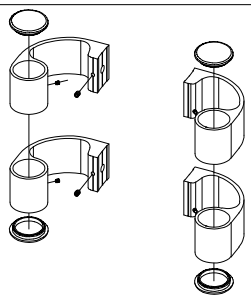
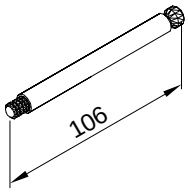
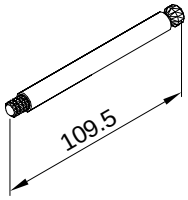
2. Art. **391.177**
   -inox osovina (L= 106 mm) ..... kom 2
   ili Art. **391.180**
   -inox osovina (L= 109.5 mm) ..... kom 2

3. Profil rukohvata vrata **F-0829** ..... kom 2
   Profil F-0829 se pila na mjeru - prema zahtjevu kupca,
   a isporučuje se u standardnoj mjeri - 6500 mm

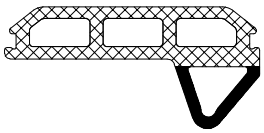
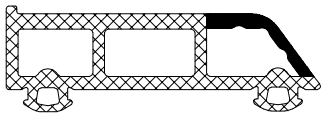
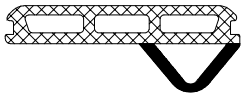
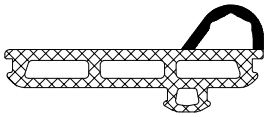
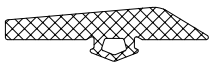
1. Art. **100.019** ..... pcs 1
   Elements of products:
   -handrail carrier, outside art. 391.182 pcs 2
   -handrail carrier, inside art. 391.181 pcs 2
   -plug for profile of handrail art. 375.075 pcs 4
   -screw M6x10 DIN 914 art. 431.342 pcs 2
   -screw M5x4 DIN 913 art. 431.805 pcs 4

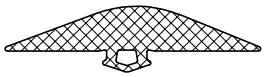
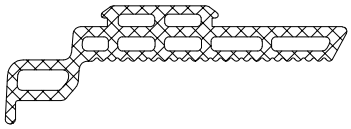
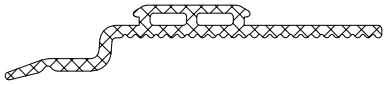
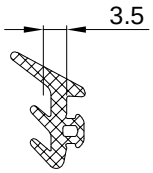
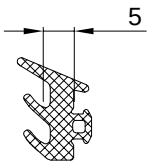
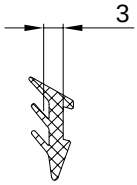
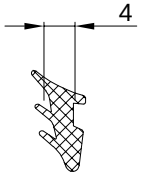
2. Art. **391.177**
   -inox shaft (L= 106 mm) ..... pcs 2
   or Art. **391.180**
   -inox shaft (L= 109.5 mm) ..... pcs 2

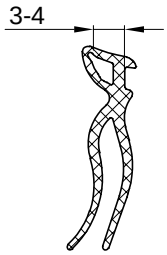
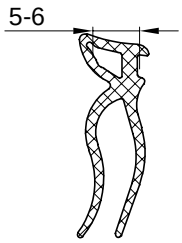
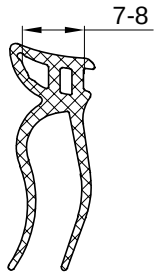
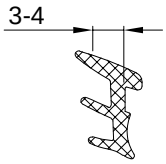
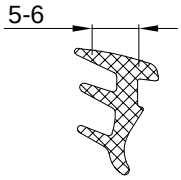
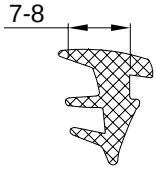
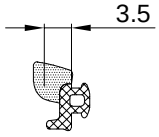
3. Handrail profile of door **F-0829** ..... pcs 2
   The profile F-0829 is cutted at dimension- according to
   request of customer and delivering in standard dimension-6500 mm

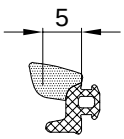
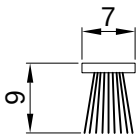
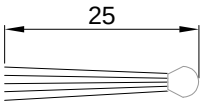
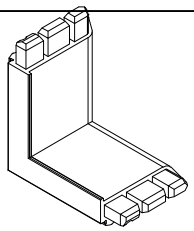
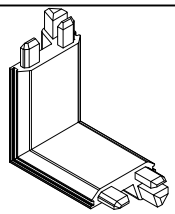
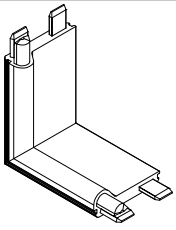
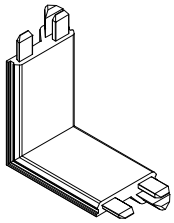
Oznaka Code	Izgled-presjek View-cross section	Opis Description	Materijal Material	Napomena Remark
100.019 01 02 03		- Nosač rukohvata F-0829 - Boje: 01- bijela; 02 - siva;03 - crna - Carrier handrail F-0829 - Color: 01- white; 02 - gray;03 - black		
391.178		- Inox osovina (L=106 mm) - Inox shaft (L=106 mm)	Inox Inox	
391.180		- Inox osovina (L=109.5 mm) za Termo 85 VP (obostrani lim) - Inox shaft (L=109.5 mm) for Termo 85 VP (both side sash)	Inox Inox	

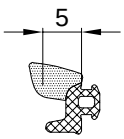
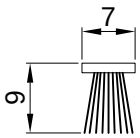
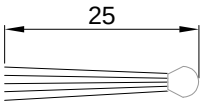
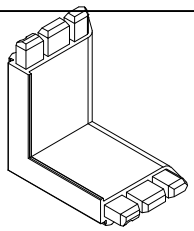
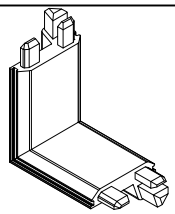
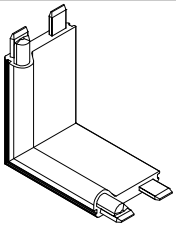
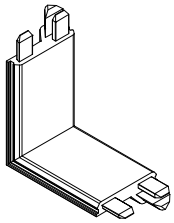
Brtvila
Gaskets

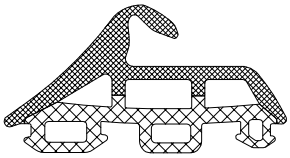
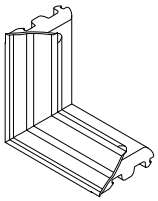
Oznaka Code	Izgled-presjek View- cross section	Opis Description	Materijal Material	Napomena Remark
338.006		- Centralna brtva krila - otvaranje unutra - Central gasket-sash-inward opening	EPDM	70 ShA 0.7 g/cm³
338.004		- Centralna brtva rama - otvaranje unutra - Central gasket-frame-inward opening	EPDM	70 ShA 0.7 g/cm³
338.010		- Centralna brtva krila - otvaranje vani - Central gasket-sash-outward opening	EPDM	70 ShA 0.7 g/cm³
338.009		- Centralna brtva rama - otvaranje vani - Central gasket-frame-outward opening	EPDM	70 ShA 0.7 g/cm³
328.006		- Brtva u krilu - Rebate gasket	EPDM	60±5 (ShA)
317.002		- Brtva u krilu - Rebate gasket	EPDM + Spužvasti EPDM EPDM + Foam EPDM	60 ShA + 0.90 kg/m³
331.013		- Brtva u pragu - otvaranje unutra - Threshold gasket - inward opening	EPDM	71 (ShA)

Oznaka Code	Izgled-presjek View- cross section	Opis Description	Materijal Material	Napomena Remark
331.012		- Brtva u pragu - otvaranje vani - Threshold gasket - outward opening	EPDM	71 (ShA)
348.004		- Razdjelna brtva panelna ispuna - Gasket (between sash and panel/ Termo 85 VP)	EPDM	70±5 (ShA)
348.003		- Razdjelna brtva staklena ispuna - Gasket (between sash ang glass panel/ Termo 85 VP)	EPDM	70±5 (ShA)
328.002		- Brtva prema staklu /vanjska/ - Glazing gasket /external/	EPDM	60±5 (ShA)
328.003		- Brtva prema staklu /vanjska/ - Glazing gasket /external/	EPDM	60±5 (ShA)
318.001		- Brtva prema staklu /unutarnja/ - Glazing gasket /internal/	EPDM	70±5 (ShA)
318.002		-Brtva prema staklu /unutarnja/ -Glazing gasket /internal/	EPDM	70±5 (ShA)

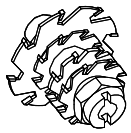
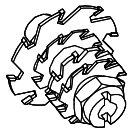
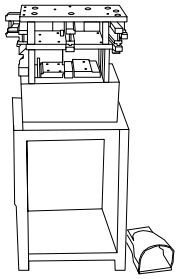
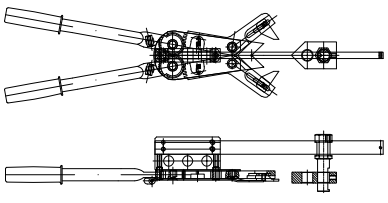
Oznaka Code	Izgled-presjek View- cross section	Opis Description	Materijal Material	Napomena Remark
311.003		- Brtva prema staklu /unutarnja,nosi 3-4 mm/ - Glazing gasket /internal, 3-4 mm/	EPDM	70±5 (ShA)
311.004		- Brtva prema staklu /unutarnja,nosi 5-6 mm/ - Glazing gasket /internal, 5-6 mm/	EPDM	70±5 (ShA)
311.005		- Brtva prema staklu /unutarnja,nosi 7-8 mm/ - Glazing gasket /internal, 7-8 mm/	EPDM	70±5 (ShA)
318.015		- Brtva prema staklu /unutarnja/ - Glazing gasket /internal/	EPDM	70±5 (ShA)
318.016		- Brtva prema staklu /unutarnja/ - Glazing gasket /internal/	EPDM	70±5 (ShA)
318.017		- Brtva prema staklu /unutarnja/ - Glazing gasket /internal/	EPDM	70±5 (ShA)
328.202		- Brtva prema staklu /vanjska/ - Glazing gasket /exterior/	EPDM + spužvasti EPDM EPDM + foam EPDM	60±5ShA 0.6±0.15 g/cm³

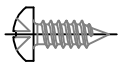
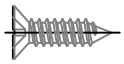
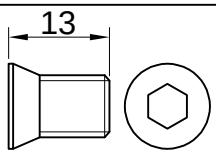
Oznaka Code	Izgled-presjek View- cross section	Opis Description	Materijal Material	Napomena Remark
328.203		- Brtva prema staklu /vanjska/ - Glazing gasket /exterior/	EPDM + spužvasti EPDM EPDM + foam EPDM	60±5ShA 0.6±0.15 g/cm³
347.003		- Četkasta brtva 7x9, (crna) - Oznaka proizvođača Schlegel: 2A773288016CJ - Brush seal 7x9, (black) - Manufacturer code Schlegel: 2A773288016CJ	PP	
347.001		- Četkasta brtva 25 mm, L=2000 mm, (crna) (Stara oznaka: Z 802) - Oznaka proizvođača Schlegel: 2U929288 - Brush gasket 25 mm, L=2000 mm, (black) (Former code: Z 802) - Manufacturer code Schlegel: 2U929288		
363.093		-Kutni umetak za centralnu brtvu 338.004 -Za profil rama (otvaranje unutra) -Corner insert for central gasket 338.004 -For frame profile (inward opening)	EPDM	30 ShA
363.094		-Kutni umetak za centralnu brtvu 338.006 -Za profil krila (otvaranje unutra) -Corner insert for central gasket 338.006 -For sash profile (inward opening)	EPDM	30 ShA
363.095		-Kutni umetak za centralnu brtvu 338.009 -Za profil rama (otvaranje vani) -Corner insert for central gasket 338.009 -For frame profile (outward opening)	EPDM	30 ShA
363.096		-Kutni umetak za centralnu brtvu 338.010 -Za profil krila (otvaranje vani) -Corner insert for central gasket 338.010 -For sash profile (outward opening)	EPDM	30 ShA

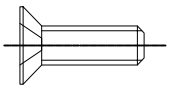
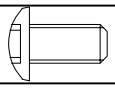
Oznaka Code	Izgled-presjek View- cross section	Opis Description	Materijal Material	Napomena Remark
328.203		- Brtva prema staklu /vanjska/ - Glazing gasket /exterior/	EPDM + spužvasti EPDM EPDM + foam EPDM	60±5ShA 0.6±0.15 g/cm³
347.003		- Četkasta brtva 7x9, (crna) - Oznaka proizvođača Schlegel: 2A773288016CJ - Brush seal 7x9, (black) - Manufacturer code Schlegel: 2A773288016CJ	PP	
347.001		- Četkasta brtva 25 mm, L=2000 mm, (crna) (Stara oznaka: Z 802) - Oznaka proizvođača Schlegel: 2U929288 - Brush gasket 25 mm, L=2000 mm, (black) (Former code: Z 802) - Manufacturer code Schlegel: 2U929288		
363.093		-Kutni umetak za centralnu brtvu 338.004 -Za profil rama (otvaranje unutra) -Corner insert for central gasket 338.004 -For frame profile (inward opening)	EPDM	30 ShA
363.094		-Kutni umetak za centralnu brtvu 338.006 -Za profil krila (otvaranje unutra) -Corner insert for central gasket 338.006 -For sash profile (inward opening)	EPDM	30 ShA
363.095		-Kutni umetak za centralnu brtvu 338.009 -Za profil rama (otvaranje vani) -Corner insert for central gasket 338.009 -For frame profile (outward opening)	EPDM	30 ShA
363.096		-Kutni umetak za centralnu brtvu 338.010 -Za profil krila (otvaranje vani) -Corner insert for central gasket 338.010 -For sash profile (outward opening)	EPDM	30 ShA

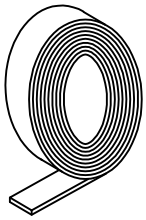
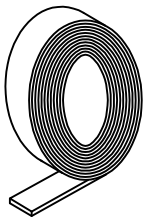
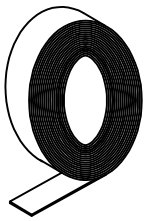
Oznaka Code	Izgled-presjek View- cross section	Opis Description	Materijal Material	Napomena Remark
338.050		- Centralna brtva - za nadsvjetlo - Central gasket - for top light	EPDM + spužvasti EPDM EPDM + foam EPDM	70 ShA 0.9 g/cm³
368.002		- Kutni umetak za centralnu brtvu 338.050 - Angle insert for central gasket 338.050	EPDM EPDM	

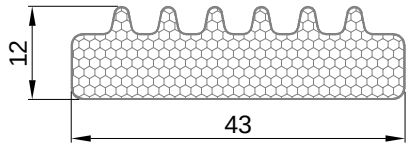
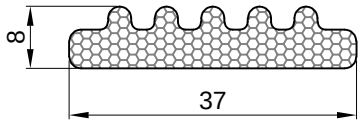
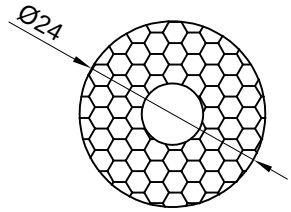
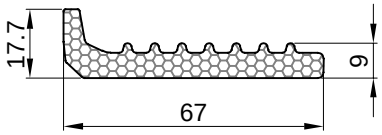
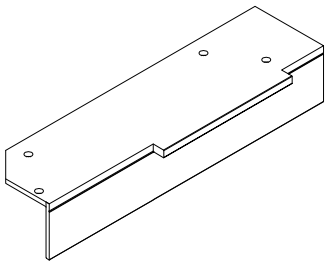
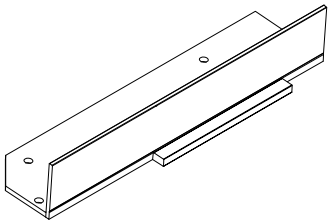
Dodaci
Accessories

Oznaka Code	Izgled-presjek View- cross section	Opis Description	Materijal Material	Napomena Remark
220.013		- Grupa glodala za obradu prečke FT-0574F, FT-0575F, FT-0576F na prečku i prečki prema ramu FT-0513F - Milling tool for processing transom FT-0574F, FT-0575F, FT-0576F to the transom and frame FT-0513F	Čelik Steel	
220.012		- Grupa glodala za obradu prečke prema krilima FT-0561F i FT-0562F - Milling tool for processing transom to the sash FT-0561F and FT-0562F	Čelik Steel	
220.017		- Grupa glodala za obrade prečke FT-0576F prema prečki FT-0580F i ramu FT-0557F - Milling tool for processing transom FT-0576F to the transom FT-0580F and frame FT-0557F	Čelik Steel	
220.026		- Grupa glodala za obrade prečke FT-0580F prema istoj prečki i profilu FT-0557F - Milling tool for processing transom FT-0580F to the transom and profile FT-0557F	Čelik Steel	
220.044		- Grupa glodala za obrade prečki prema ramu FT-2555F i prema prečki FT-2577F - Milling tool for processing transom to the frame FT-2555F and transom FT-2577F	Čelik Steel	
210.005		- Štanca za vrata Termo 85 VS i VP - Stara oznaka: S5 - Puniching machine for door Termo 85 VS i VP - Former code: S5		
240.001		- Kliješta za kutne spojnice - Stara oznaka: kliješta - 83064 - Manual crimping tool - Former code: crimper - 83064		

Oznaka Code	Opis Description	Izgled-presjek View- cross section	Materijal Material	Napomena Remark
433.002	Vijak 3.5x9.5 DIN 7981 Screw 3.5x9.5 DIN 7981		Inox A2	
433.004	Vijak 3.5x16 DIN 7981 Screw 3.5x16 DIN 7981		Inox A2	
433.015	Vijak 3.9x9.5 DIN 7981 Screw 3.9x9.5 DIN 7981		Inox A2	
433.016	Vijak 3.9x13 DIN 7981 Screw 3.9x13 DIN 7981		Inox A2	
433.017	Vijak 3.9x16 DIN 7981 Screw 3.9x16 DIN 7981		Inox A2	
433.018	Vijak 3.9x19 DIN 7981 Screw 3.9x19 DIN 7981		Inox A2	
433.029	Vijak 4.2x16 DIN 7981 Screw 4.2x16 DIN 7981		Inox A2	
433.042	Vijak 4.8x16 DIN 7981 Screw 4.8x16 DIN 7981		Inox A2	
433.045	Vijak 4.8x25 DIN 7981 Screw 4.8x25 DIN 7981		Inox A2	
433.092	Vijak 3.5x16 DIN 7982 Screw 3.5x16 DIN 7982		Inox A2	
433.093	Vijak 3.5x19 DIN 7982 Screw 3.5x19 DIN 7982		Inox A2	
433.094	Vijak 3.5x22 DIN 7982 Screw 3.5x22 DIN 7982		Inox A2	
433.096	Vijak 3.5x32 DIN 7982 Screw 3.5x32 DIN 7982		Inox A2	
433.099	Vijak 3.5x50 DIN 7982 Screw 3.5x50 DIN 7982		Inox A2	
433.117	Vijak 4.2x16 DIN 7982 Screw 4.2x16 DIN 7982		Inox A2	
433.130	Vijak 4.8x19 DIN 7982 Screw 4.8x19 DIN 7982		Inox A2	
433.131	Vijak 4.8x22 DIN 7982 Screw 4.8x22 DIN 7982		Inox A2	
431.327	Vijak M5x6 DIN 914 Screw M5x6 DIN 914		Inox A2	
431.340	Vijak M6x6 DIN 914 Screw M6x6 DIN 914		Inox A2	
431.342	Vijak M6x10 DIN 914 Screw M6x10 DIN 914		Inox A2	
431.266	Vijak M8x13 Tip Feal Screw M8x13 Typ Feal		Inox A2	

Oznaka Code	Opis Description	Izgled-presjek View- cross section	Materijal Material	Napomena Remark
431.280	Vijak M5x10 DIN 7991 Screw M5x10 DIN 7991		Inox A2	
431.281	Vijak M5x12 DIN 7991 Screw M5x12 DIN 7991		Inox A2	
431.904	Vijak M5x10 ISO 7380 Screw M5x10 ISO 7380		Inox A2	

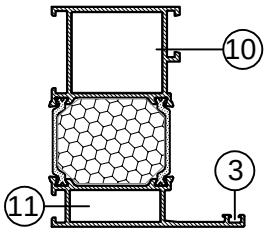
Oznaka Code	Izgled-presjek View- cross section	Opis Description	Materijal Material	Napomena Remark
414.001		- TEROSON 8519P-primer HENKEL - Na očišćenu površinu nanijeti primer te ostaviti u stanju mirovanja 30 min - TEROSON 8519P-primer HENKEL - The surfaces to be coated must be dry, free of oil, dust, grease and other components		
414.002		- TEROSON MS 9399 -ljepilo HENKEL - Na impregniranu površinu nanijeti lepilo zalijepiti te ostaviti u stanju mirovanja 24 sata - TEROSON MS 9399 -sealant HENKEL - The surfaces to be coated must be dry, free of oil, dust, grease and other components		
412.001		- Obostrano ljepljiva traka Coroplast-SIKA d=3 mm - Distancna ljepljiva traka između panela(stakla) i okvira krila vrata - Double-sided adhesive tape Coroplast-SIKA d=3 mm - Double-sided adhesive tape between door panel and sash		
413.002		- Obostrano ljepljiva traka Wurth d=2 mm (art.894 700 202) - Distancna ljepljiva traka između panela(stakla) i okvira krila vrata - Double-sided adhesive tape Wurth d= mm (art.894 700 202) - Double-sided adhesive tape between door panel and sash		
413.001		- Obostrano ljepljiva traka Wurth d=1 mm (art. 894 909 004) - Obostrano ljepljiva traka za dekorativno staklo u aluminijskom panelu - Double-sided adhesive tape Wurth d=1 mm (art. 894 909 004) - Double-sided adhesive tape for decorative glass in aluminium panel for door		

Oznaka Code	Izgled-presjek View- cross section	Opis Description	Materijal Material	Napomena Remark
340.013		-Izolacijska ispuna s ljepljivom trakom (43x12) (spužvasta ispuna po opsegu stakla) -Insulation foam with adhesive tape (43x12) (foam insulation around the glass)	XPE	
348.002		- Izolacijska ispuna s ljepljivom trakom (37x8) (spužvasta ispuna po opsegu stakla) - Insulation foam with adhesive tape (37x8) (foam insulation around the glass)	XPE	
340.035		- Izolacijska ispuna Nomatec Ø24 mm (spužvasta ispuna po opsegu stakla/panela) - Oznaka proizvođača NMC: 3000166 - Instulation foam Nomatec Ø24 mm (foam insulation around glass/panel) - Manufacterer code NMC: 3000166	XPE	
340.142	 **M 1:2**	- Izolacijska ispuna s ljepljivom trakom (67x9) (spužvasta ispuna po opsegu stakla) - Insulation foam with adhesive tape (67x9) (foam insulation around the glass)	XPE	
521.526		- Donji čep za profil skrivenog rukohvata F-1880 - Bottom cap for concealed handle profile F-1880	Al.	
521.527		- Gornji čep za profil skrivenog rukohvata F-1880 - Top cap for concealed handle profile F-1880	Al.	

Obrada i montaža
Processing and montage

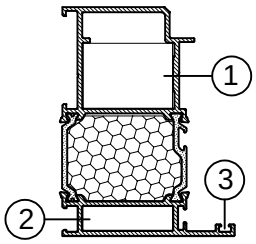
PRIKAZ KUTNIH SPOJNICA U PROFILIMA
DISPLAY OF CORNER BRACKETS IN PROFILES

FT-0513F



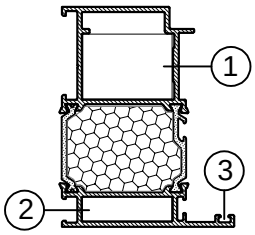
10	710.144
	710.145
11	710.091
3	730.001

FT-0556F



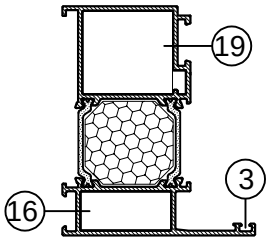
1	710.142
	710.143
2	710.141
3	730.001

FT-0551F



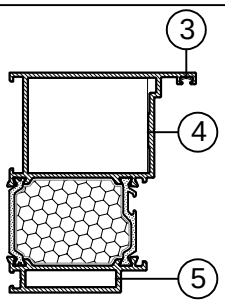
1	710.142
	710.143
2	710.141
3	730.001

FT-0557F



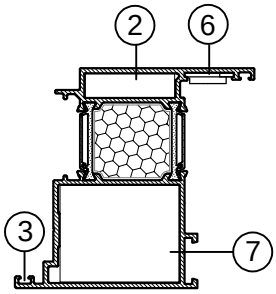
19	710.125
	710.126
16	710.172
	710.173
3	730.001

FT-0552F



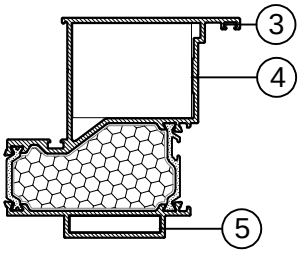
4	710.130
	710.131
5	710.140
3	730.001

FT-0561F



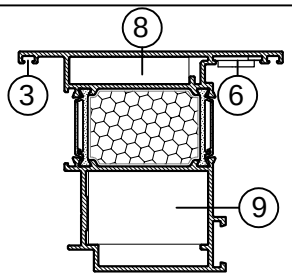
7	710.135
	710.136
2	710.141
3	730.001
6	731.010

FT-0553F



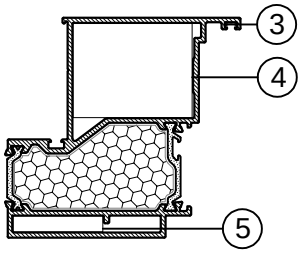
4	710.130
	710.131
3	730.001
5	710.140

FT-0562F



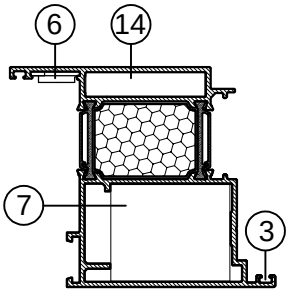
9	710.062
	710.133
8	710.134
3	730.001
6	731.010

FT-0554F



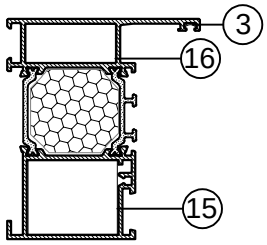
4	710.130
	710.131
3	730.001
5	710.140

FT-0563F



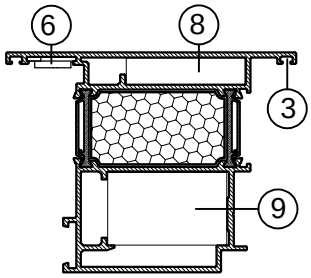
14	710.169
6	731.010
7	710.135
	710.136
3	730.001

FT-2555F



15	710.059
	710.072
	730.009
16	710.172
	710.173
3	730.001

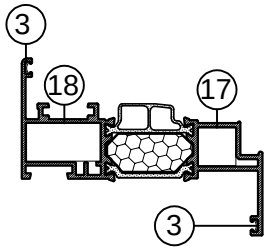
FT-0564F



8	710.134
6	731.010
9	710.062
	710.133
3	730.001

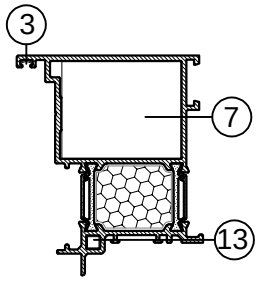
PRIKAZ KUTNIH SPOJNICA U PROFILIMA
DISPLAY OF CORNER BRACKETS IN PROFILES

FT-0565F



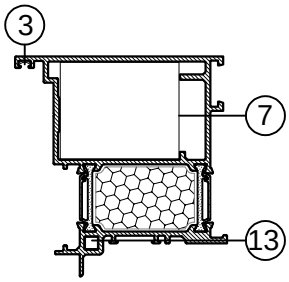
17	710.484
	710.485
18	710.450
	710.458
	730.008
3	730.001

FT-0591F



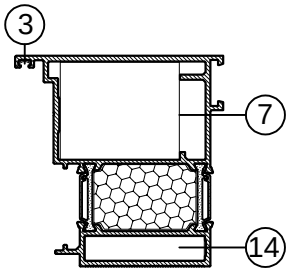
7	710.135
	710.136
3	730.001
13	710.203

FT-0592F



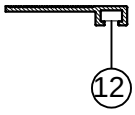
7	710.135
	710.136
3	730.001
13	710.203

FT-0593F



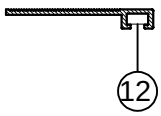
7	710.135
	710.136
14	710.169
3	730.001

F-1093



12	710.015

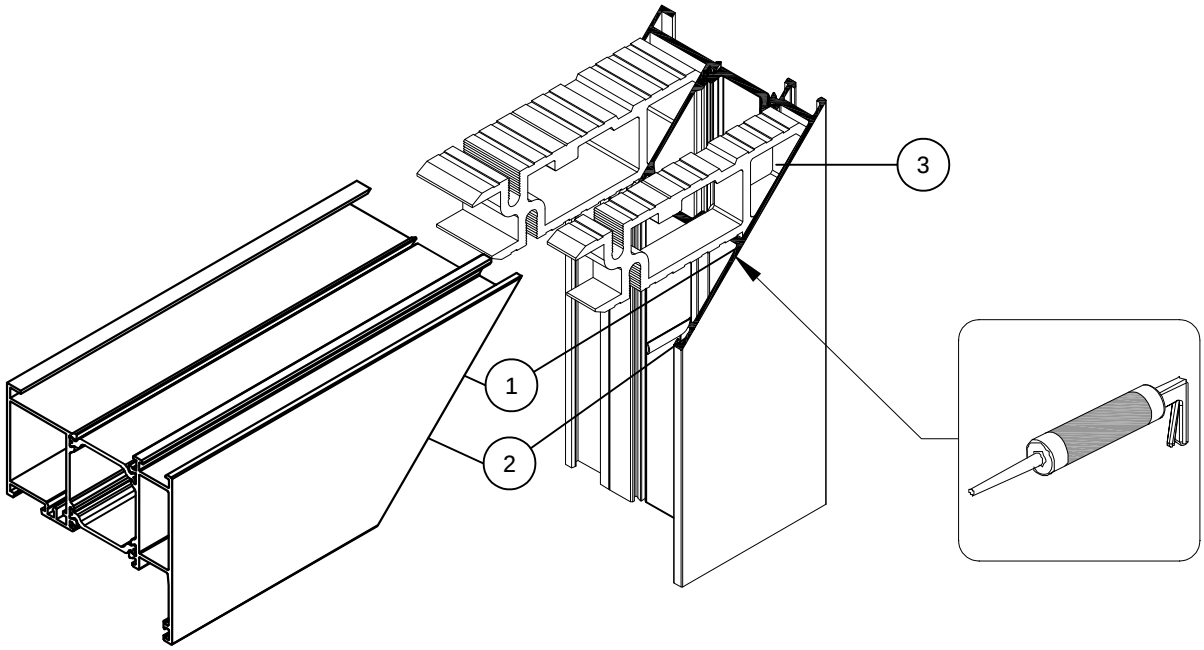
F-1205



12	710.015

SPAJANJE PROFILA kutnim spojnicama POD KUTEM OD 90°

CONNECTION OF PROFILES WITH CORNER BRACKETS AT 90° ANGLE



POSTUPAK SPAJANJA PROFILA:

1. Sve površine koje se spajaju-rezove očistiti i odmastiti odgovarajućim sredstvom /npr. "Henkel" - *Teroson VR 20 ili Teroson FL+* /.
2. Premazati sve površine koje se spajaju ljepilom za metal /npr. "Henkel" - *Teroson MS 939* /.
3. Ljepilo za metal ubrizgati u komore za kutnik (po opsegu komore)
4. Profile s kutnim spojnicama izravnati i spojiti
5. Dio ljepila koji iscuri između rezova očistiti sredstvom za čišćenje i odmašćivanje /npr. "Henkel" - *Teroson VR 20 ili Teroson FL+* /.

NAPOMENA:

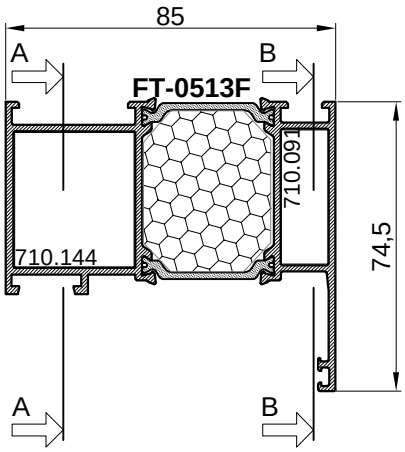
Ovaj postupak spajanja profila primjenjiv je za sve Feal-ove kutnike i njima odgovarajuće komore. Lijepljenjem rezova i kutnika ljepilima za metal, osigurava se potrebna zrako- i vodonepropusnosti spoja kao i dodatna mehanička čvrstoća spoja.

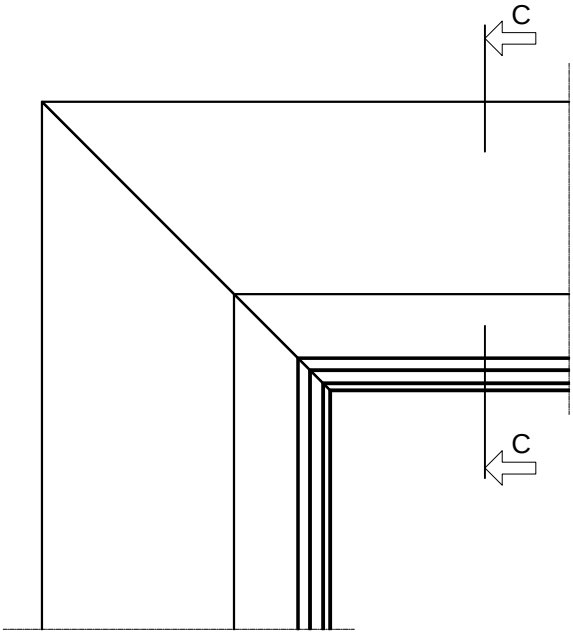
PROFILE CONNECTION PROCEDURE:

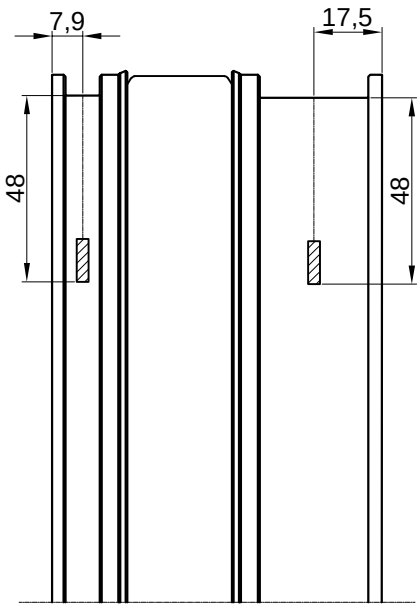
1. Clean and degrease all connecting surfaces with suitable products /e.g. "Henkel" - *Teroson VR 20 or Teroson FL+* /.
2. Smear connecting all surfaces with metal glue /e.g. "Henkel" - *Teroson MS 939* /.
3. Inject metal glue into chambers for the corner bracket (on chamber edges)
4. Level profiles with corner brackets and connect
5. Leaked glue that comes from the joints remove with cleaning and degreasing products /e.g. "Henkel" - *Teroson VR 20 ili Teroson FL+* /.

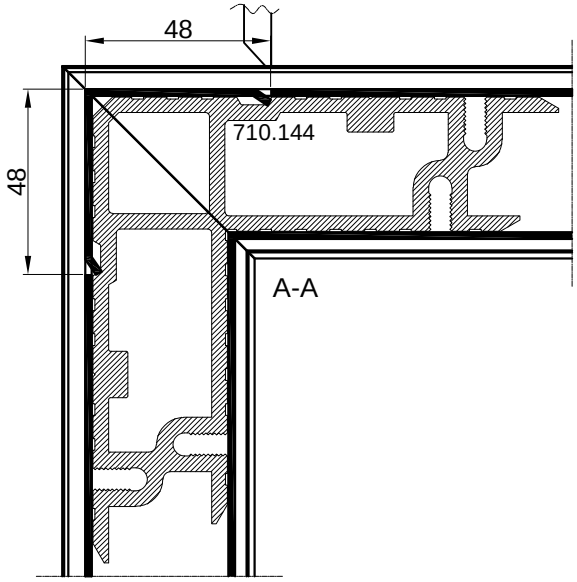
NOTE:

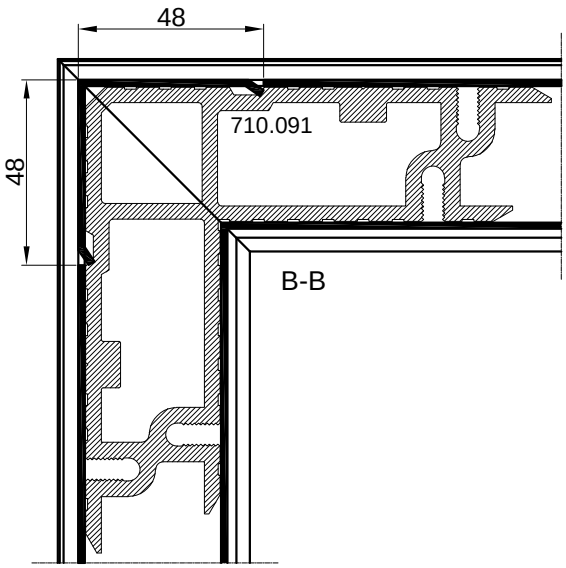
This profile connection procedure is applicable for all Feal corner brackets and their appropriate chambers. By gluing the profile and corner brackets with a metal glue, necessary air and water tightness of the joint as well as additional mechanical properties is ensured

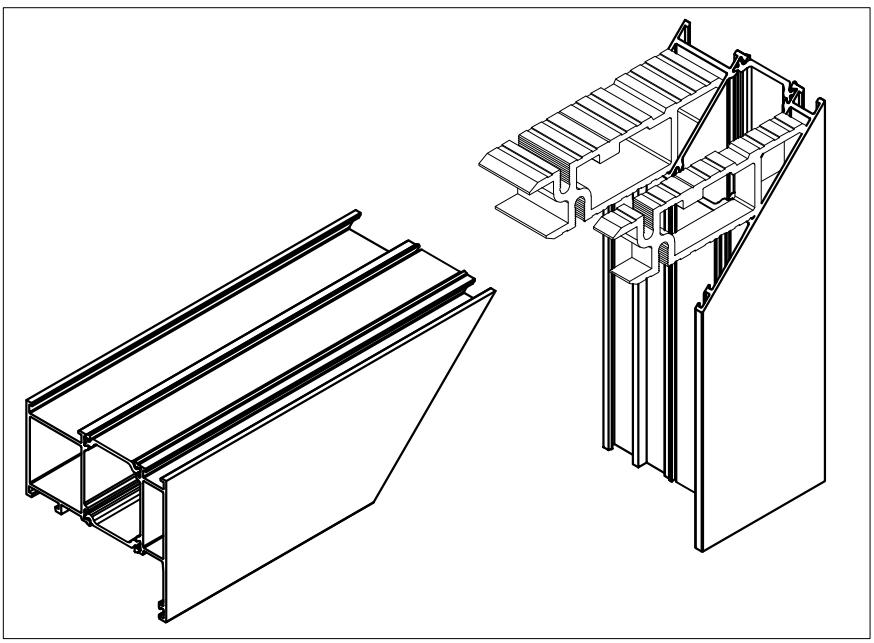

85
A
B
FT-0513F
710.091
710.144
74,5
A
B

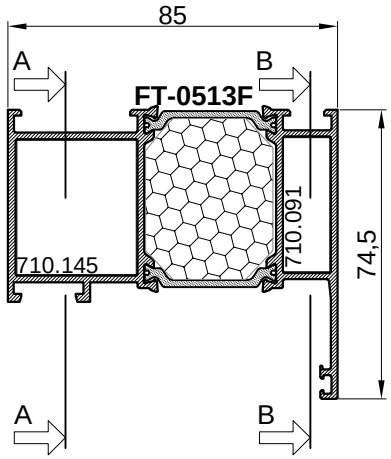

C
C

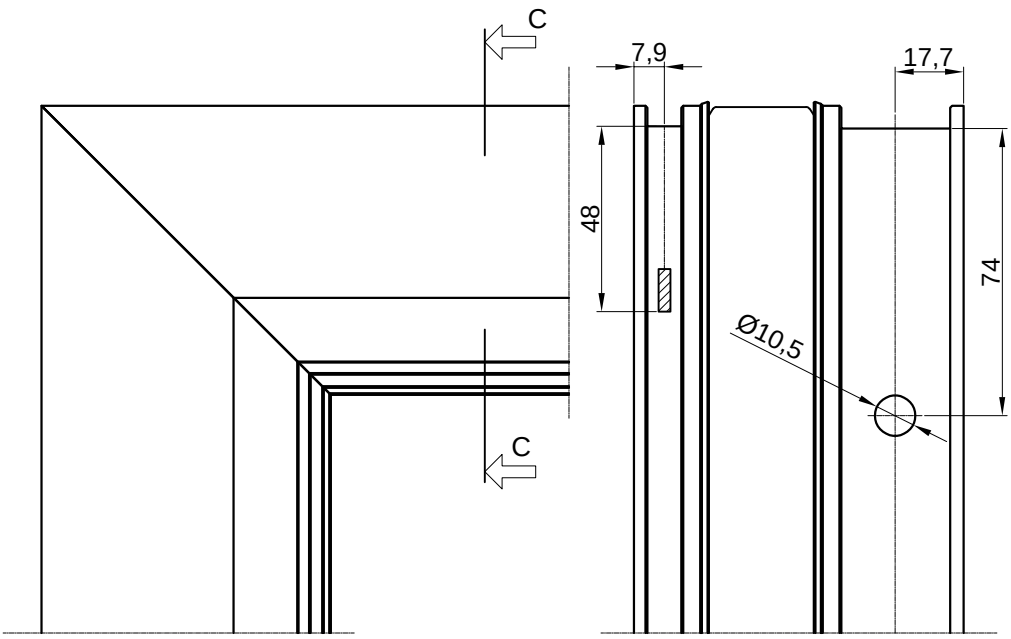

7,9
17,5
48
48

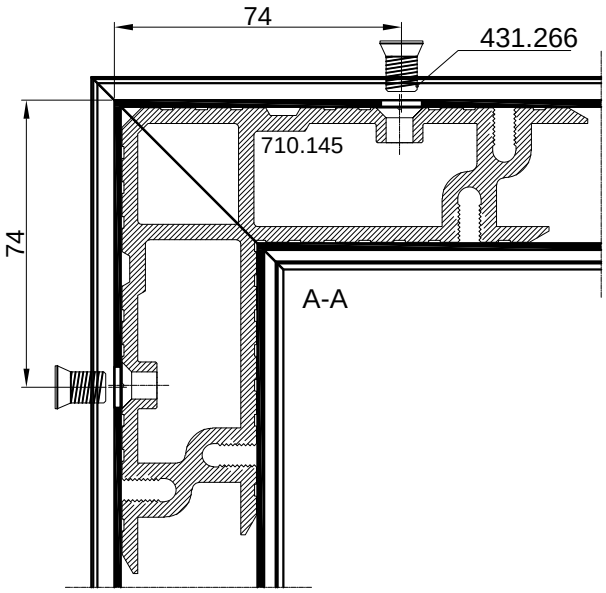

48
48
710.144
A-A

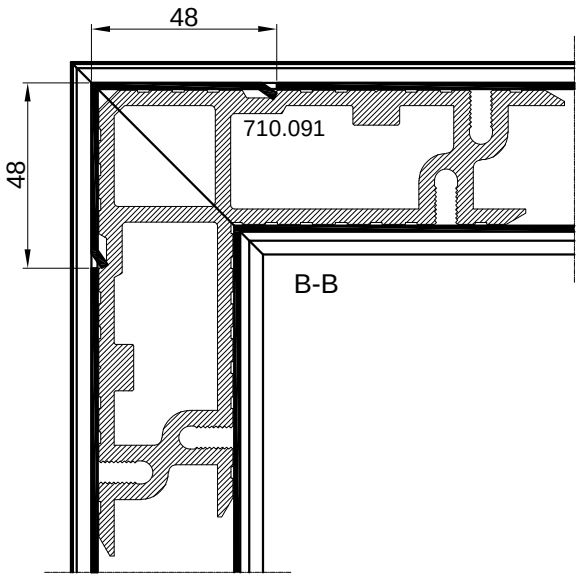

48
48
710.091
B-B

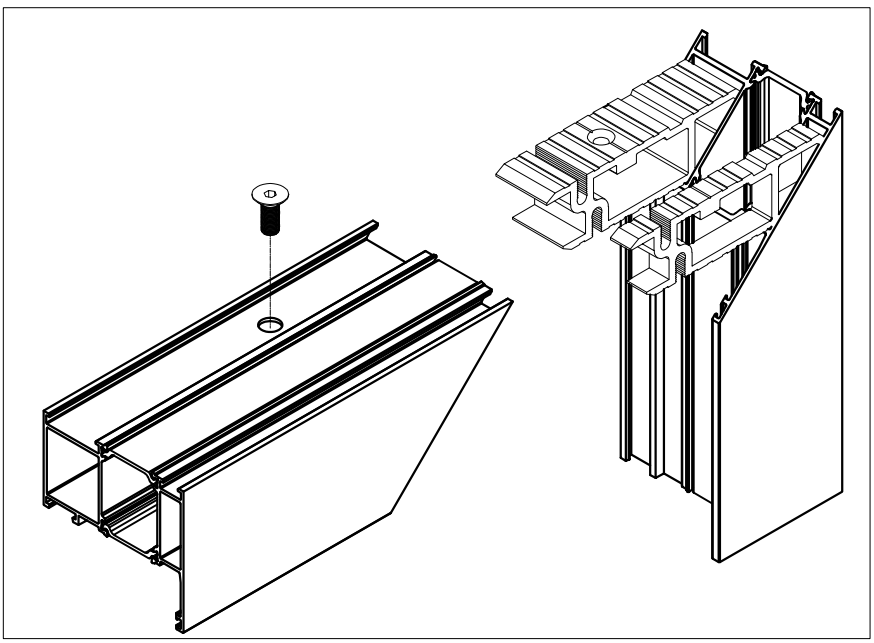


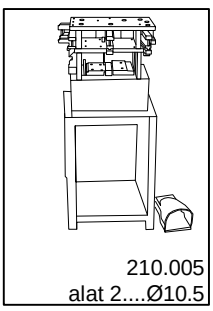

85
A
B
FT-0513F
710.091
710.145
74,5
A
B

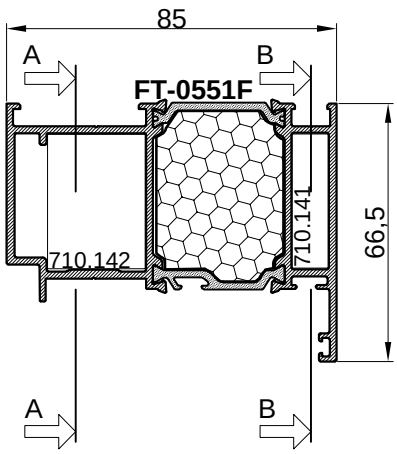

C
7,9
17,7
48
74
Ø10,5
C

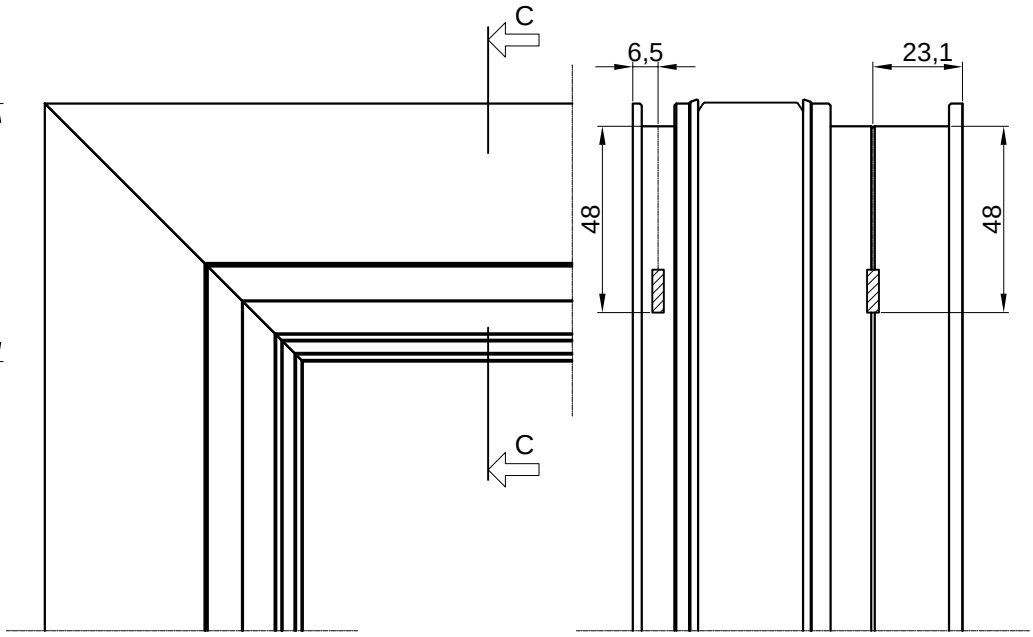

74
431.266
710.145
74
A-A

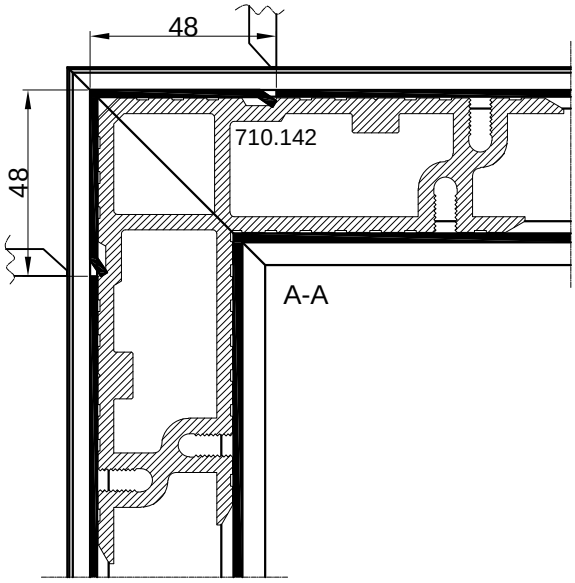

48
710.091
48
B-B

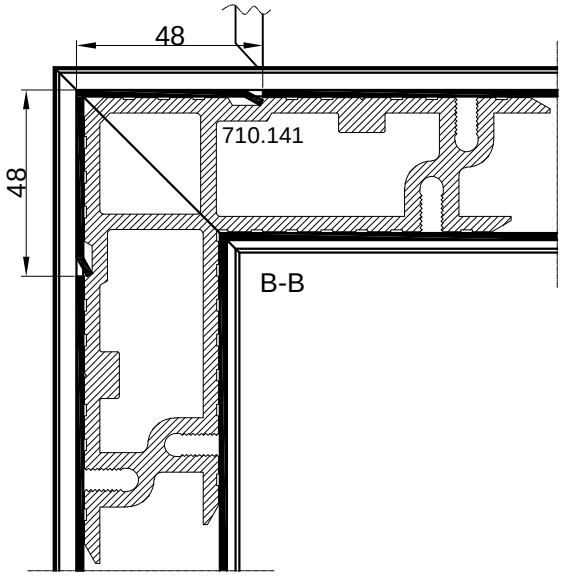


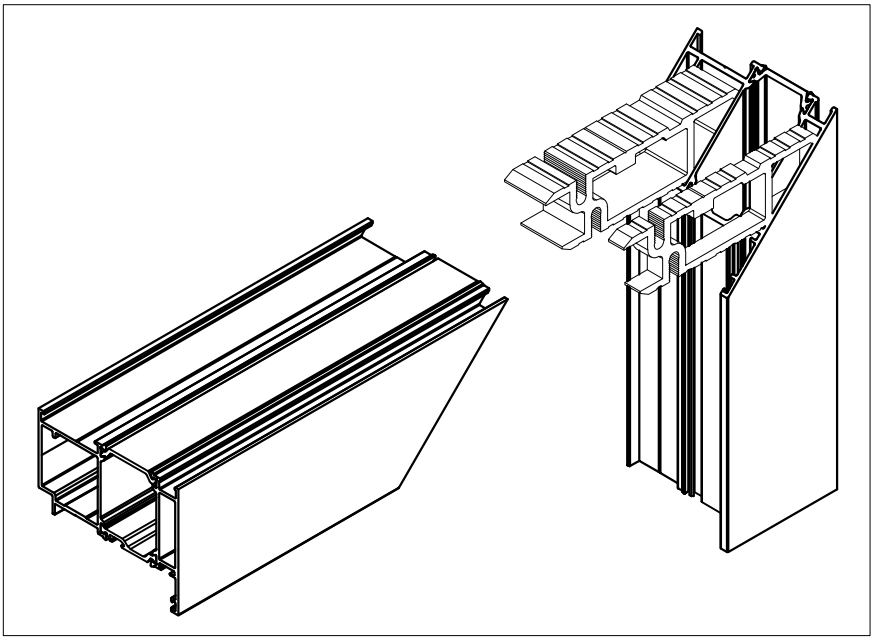

210.005
alat 2....Ø10.5

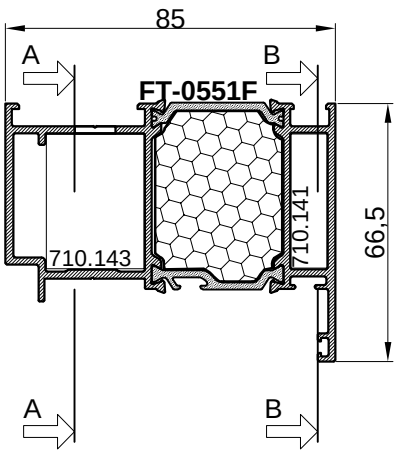

85
A
B
FT-0551F
710.142
710.141
66,5
A
B

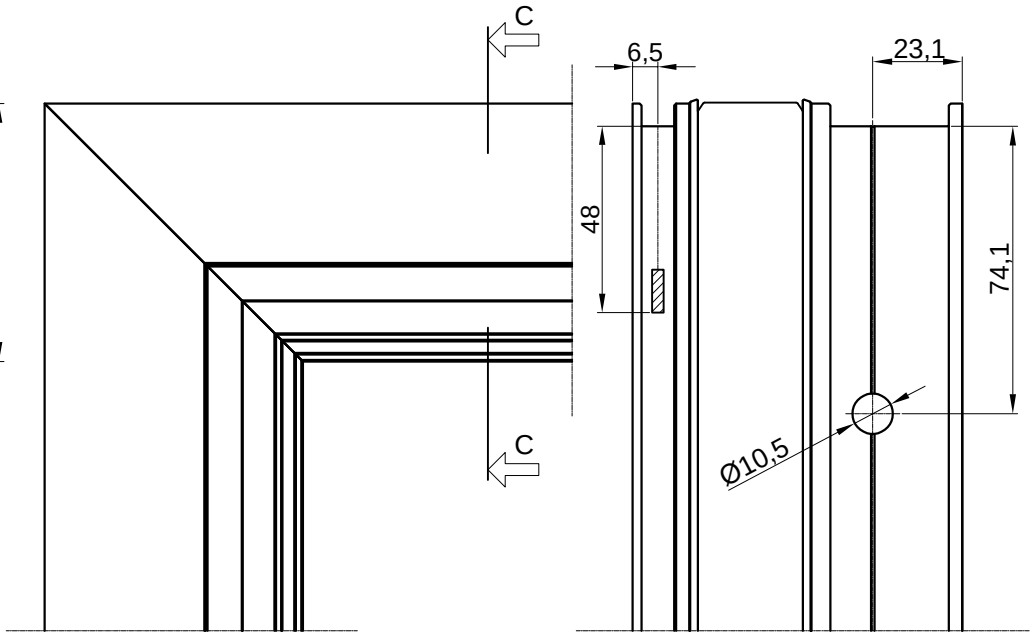

C
6,5
23,1
48
48
C

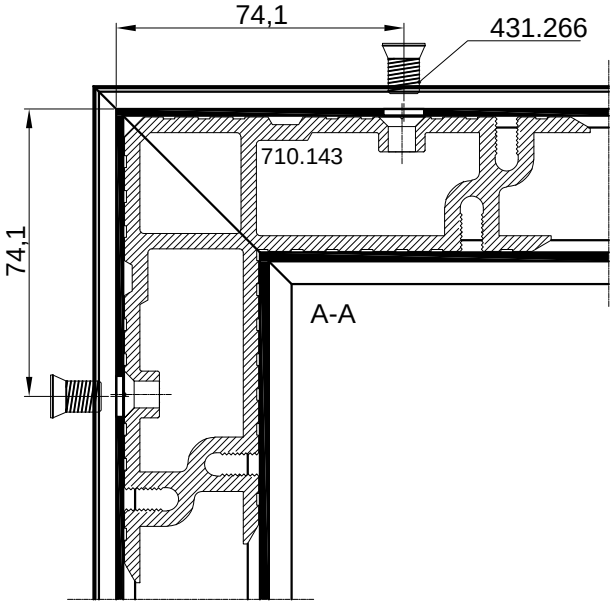

48
48
710.142
A-A

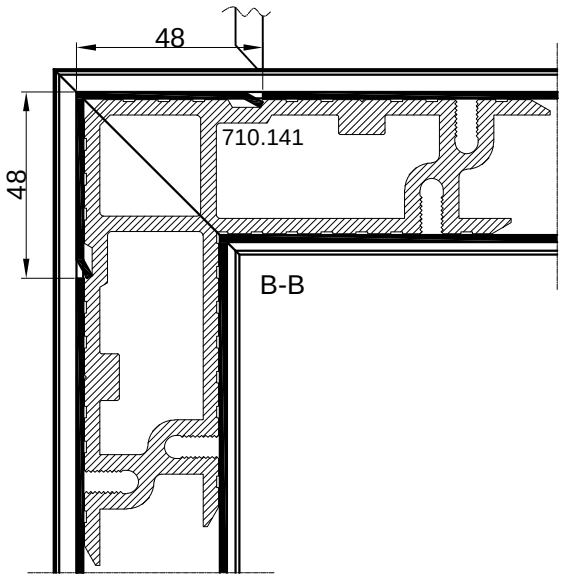

48
48
710.141
B-B

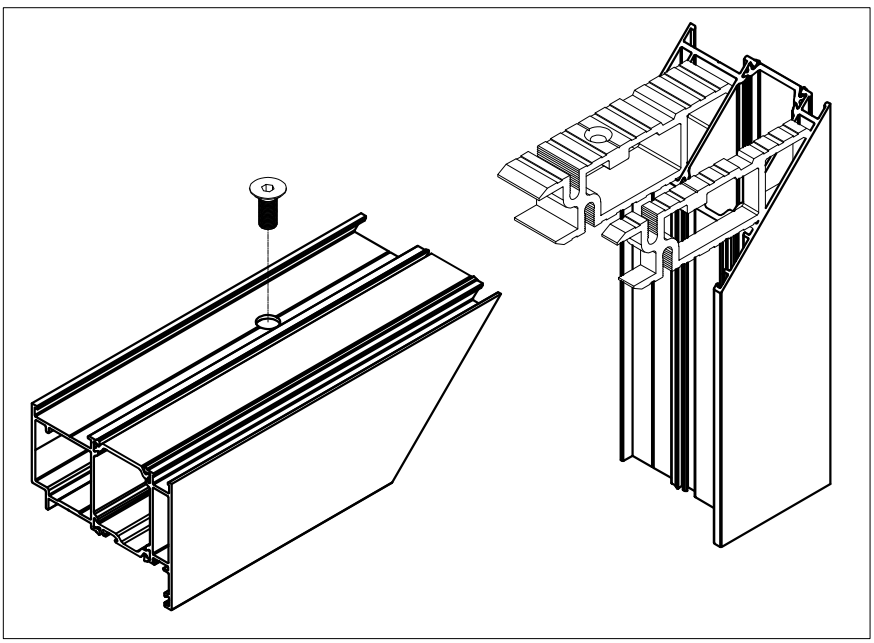


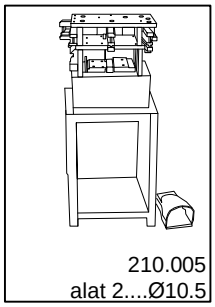

85
A
B
FT-0551F
710.143
710.141
66,5
A
B

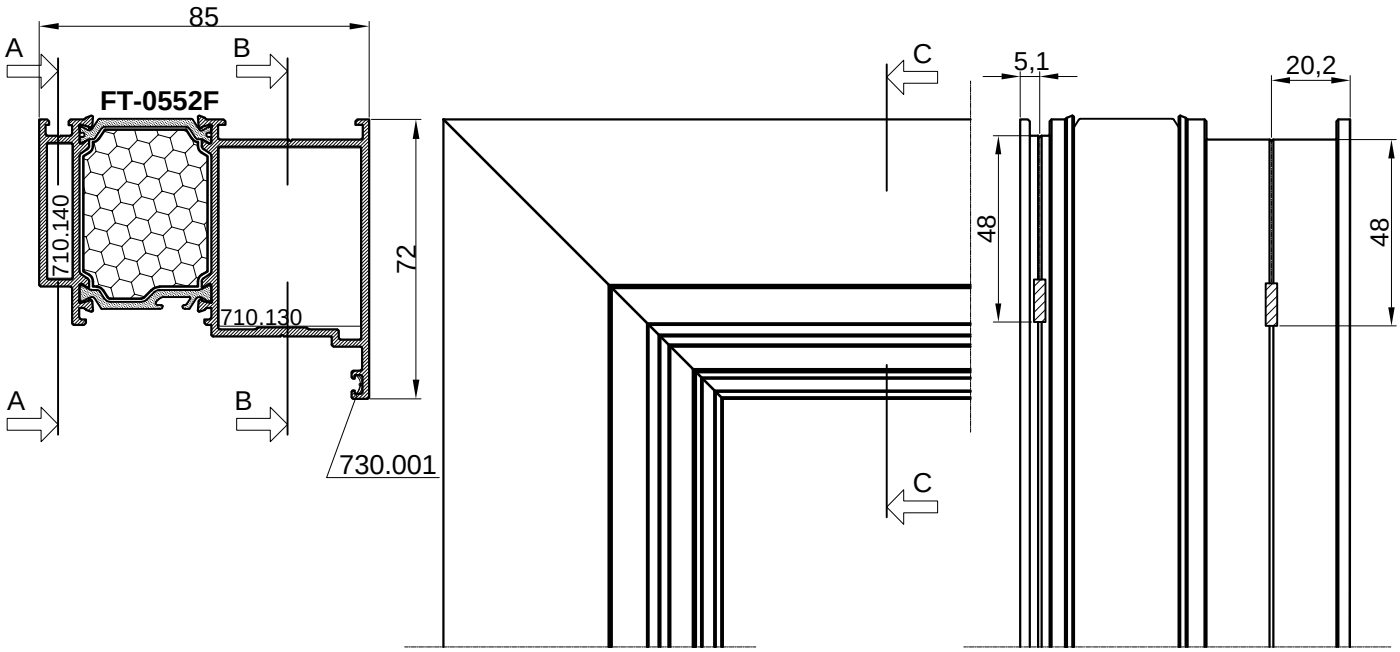

C
6,5
23,1
48
74,1
Ø10,5
C

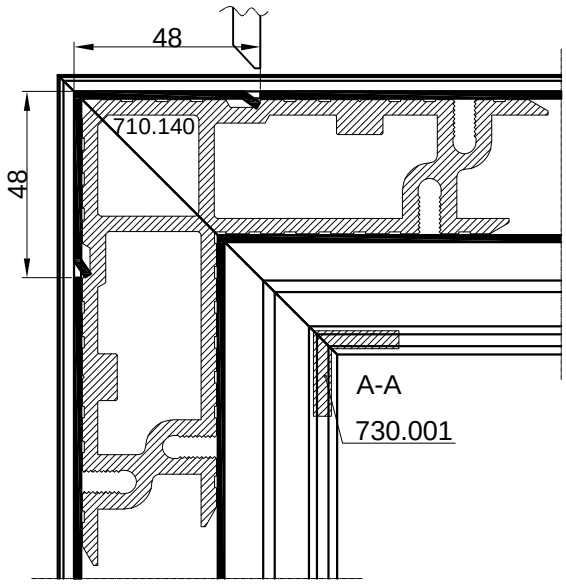

74,1
431.266
710.143
74,1
A-A

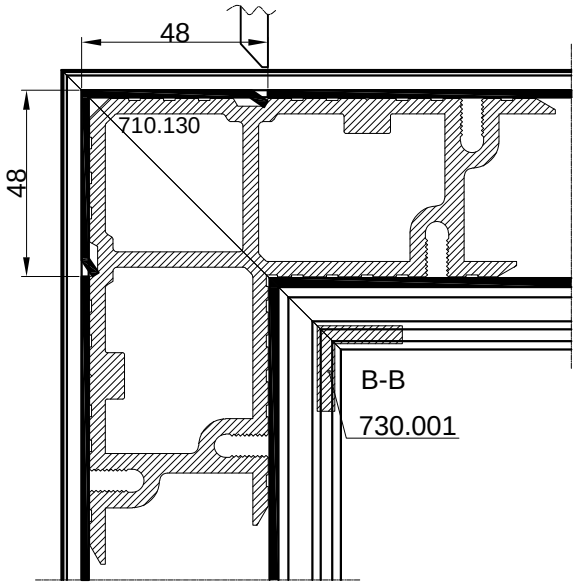

48
710.141
48
B-B

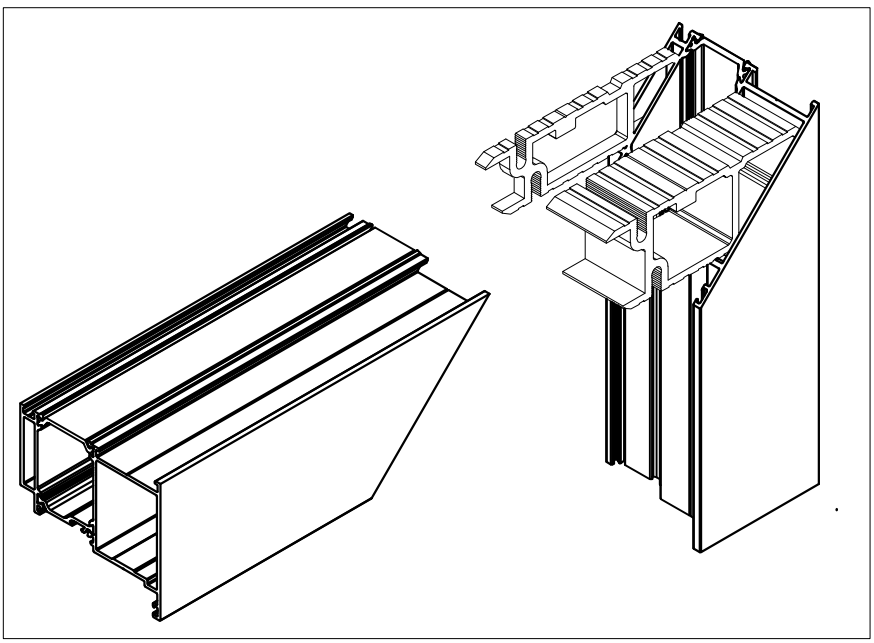


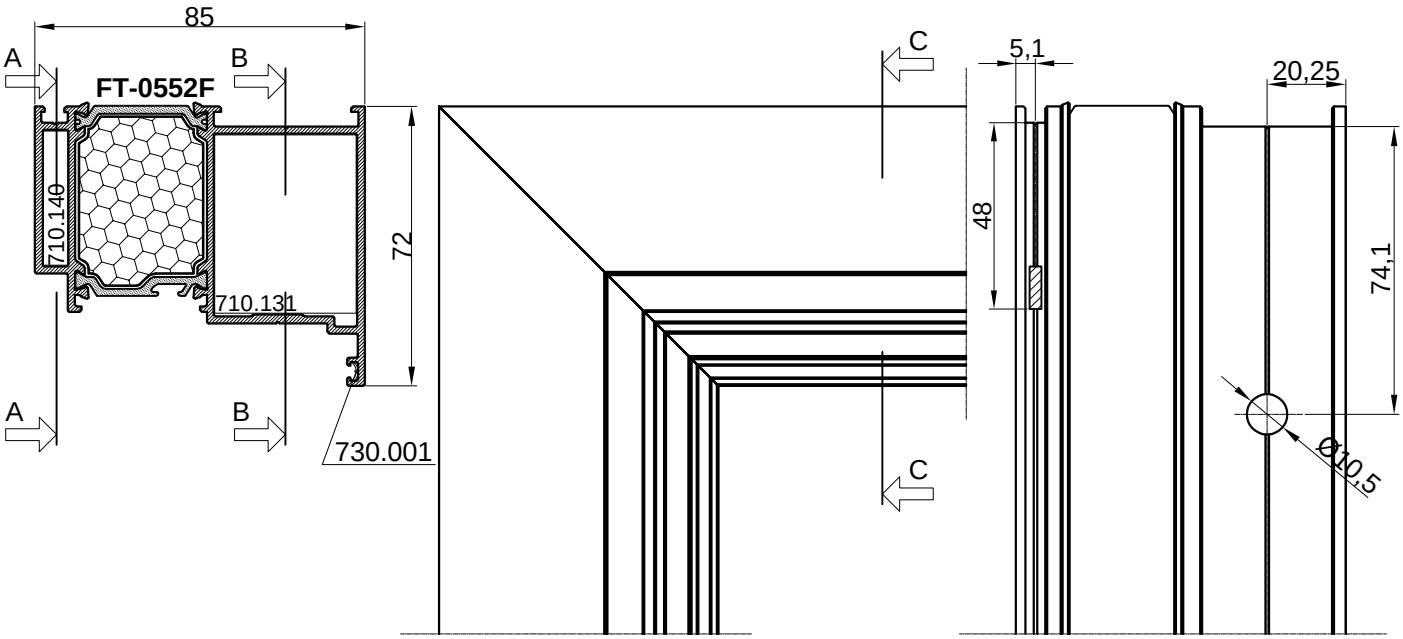

210.005
alat 2....Ø10.5

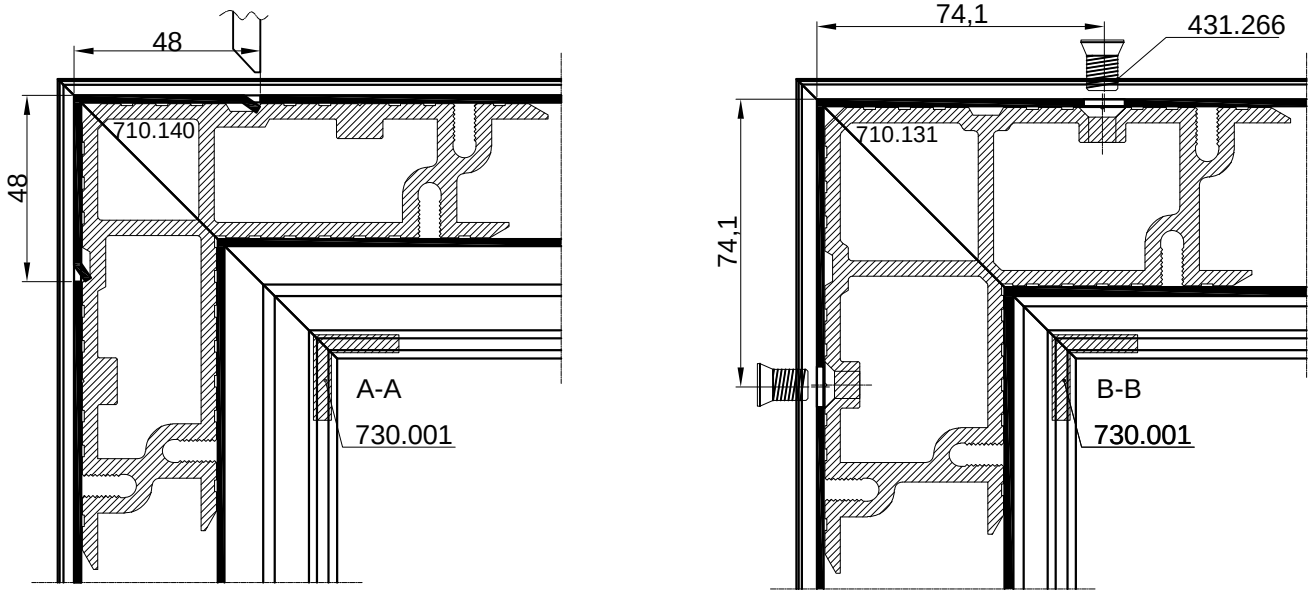

85
A
B
FT-0552F
710.140
710.130
72
730.001
C
5,1
20,2
48
48

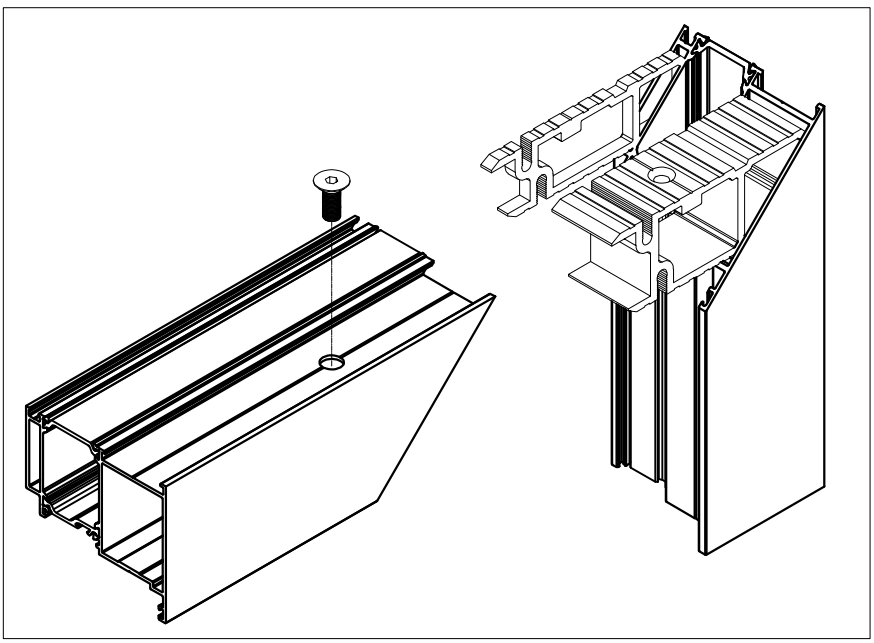

48
48
710.140
A-A
730.001

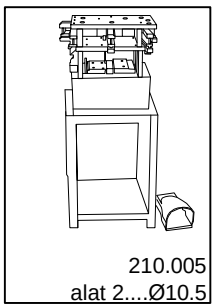

48
48
710.130
B-B
730.001

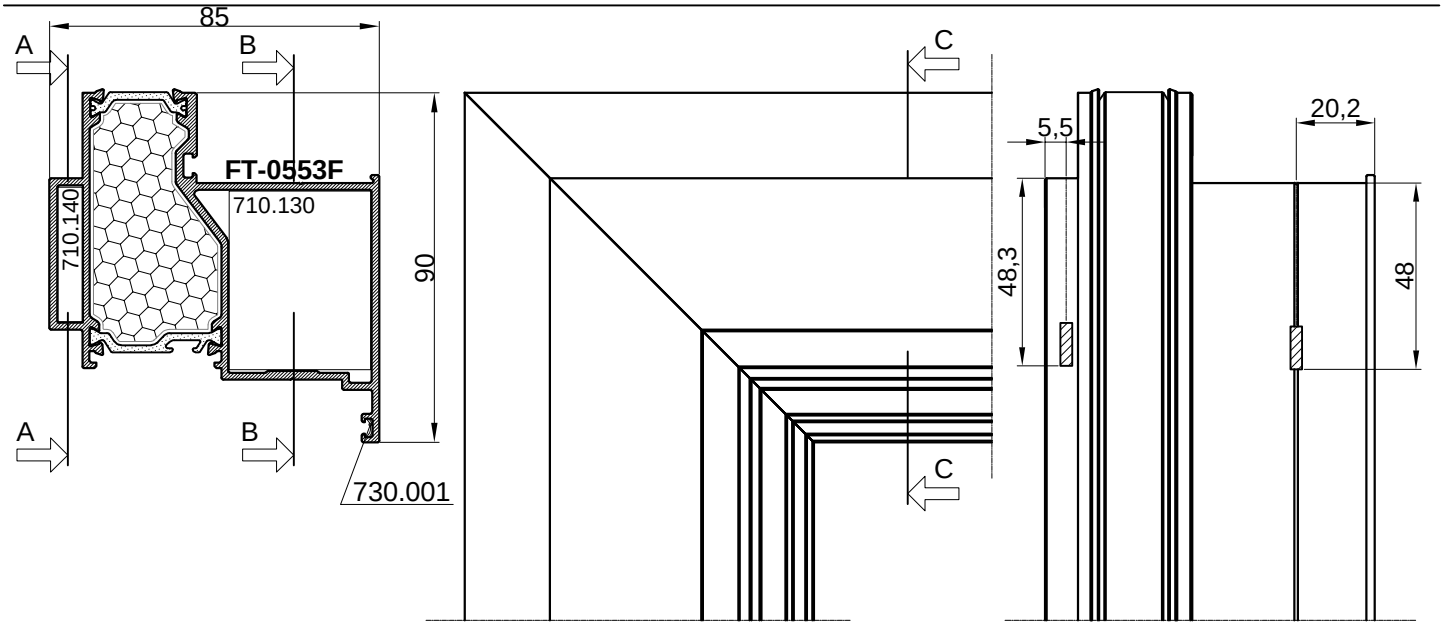


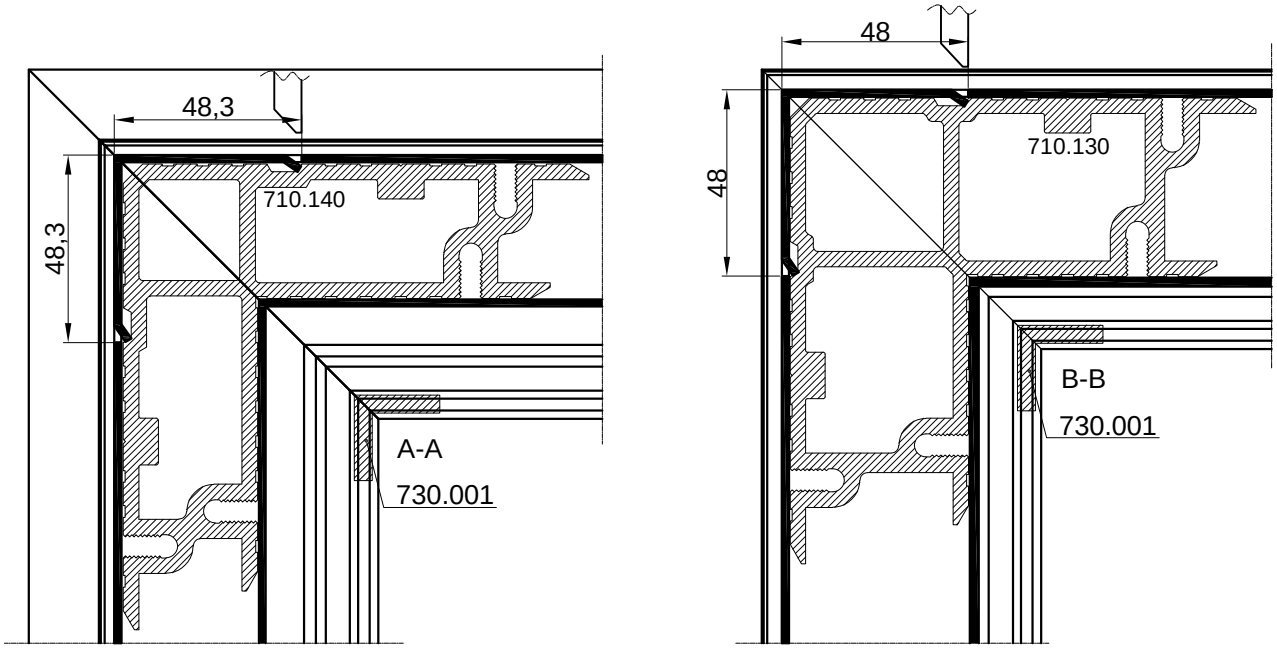

85
A
B
FT-0552F
710.140
710.131
72
730.001
C
5,1
20,25
48
74,1
Ø10,5

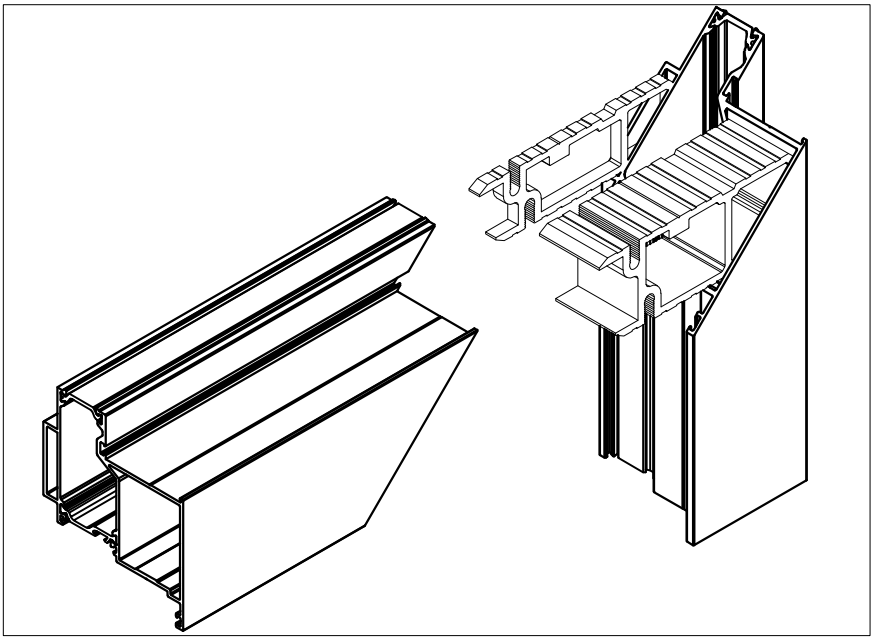

48
710.140
48
A-A
730.001
74,1
431.266
710.131
74,1
B-B
730.001

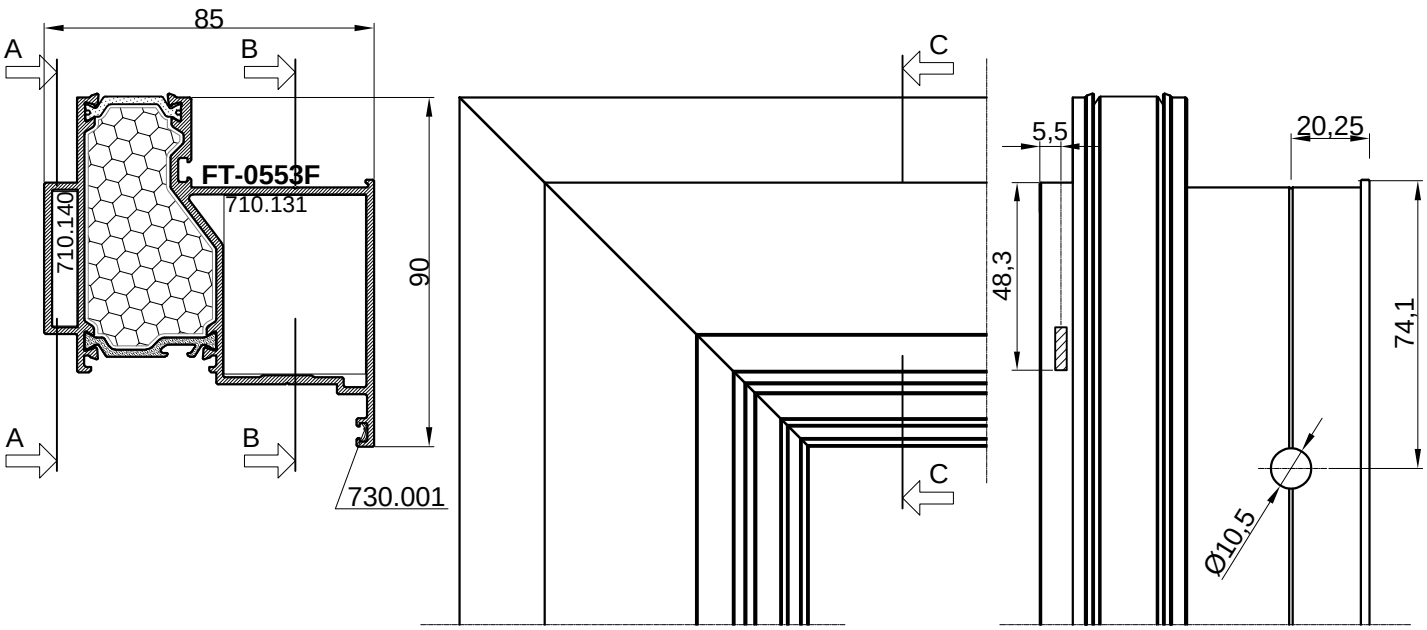


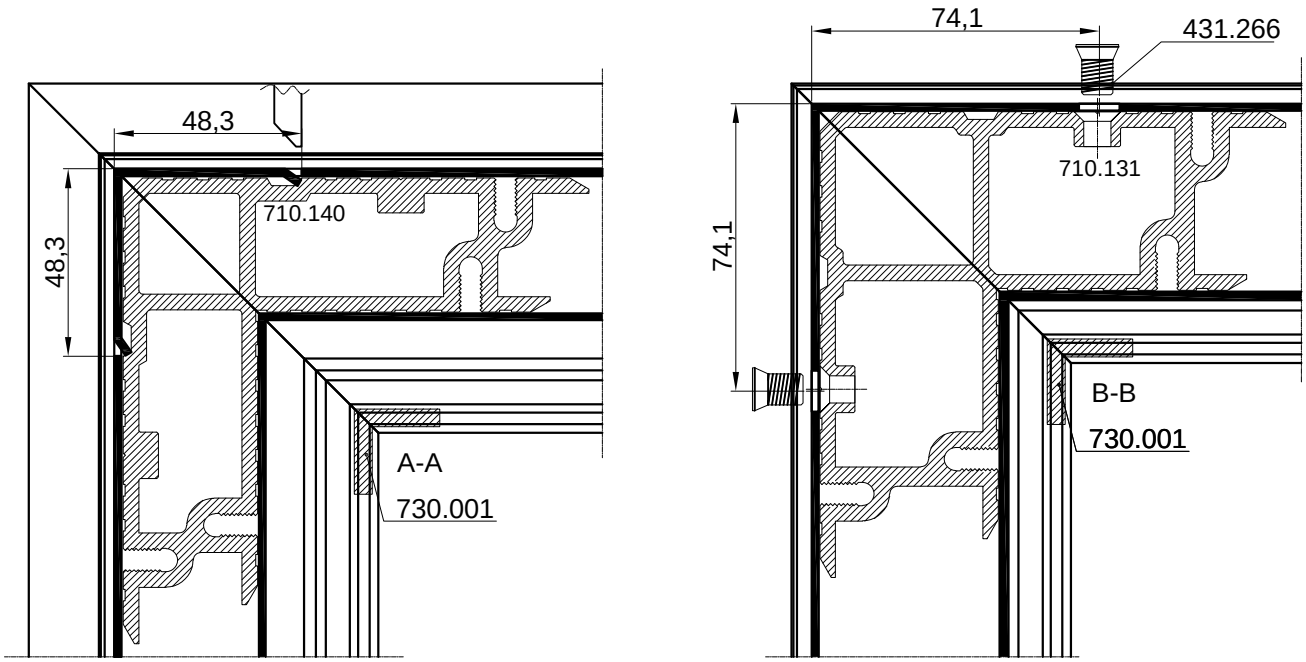

210.005
alat 2....Ø10.5


85
A
B
FT-0553F
710.130
710.140
90
730.001
C
5,5
20,2
48,3
48

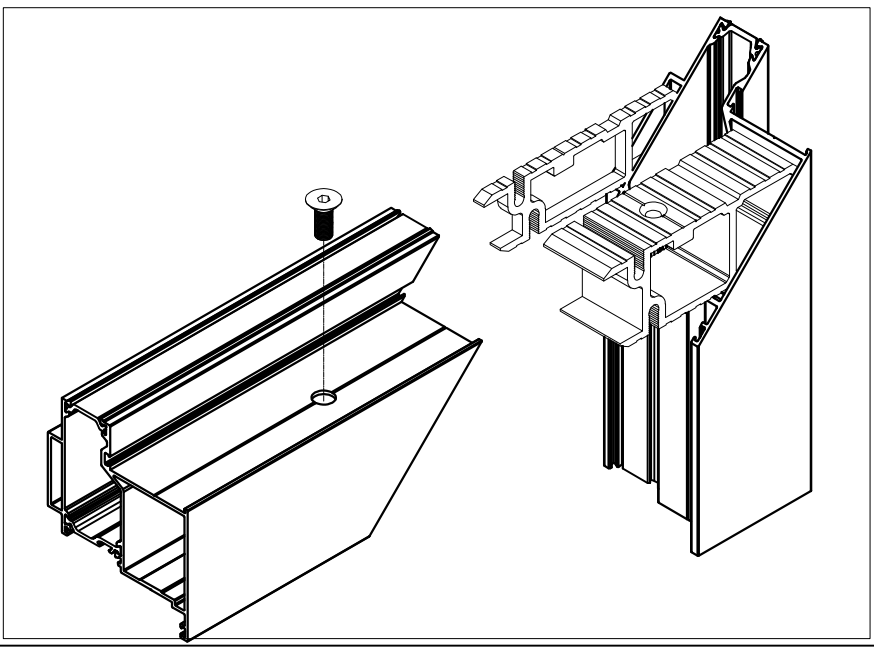

48,3
48,3
710.140
A-A
730.001
48
48
710.130
B-B
730.001

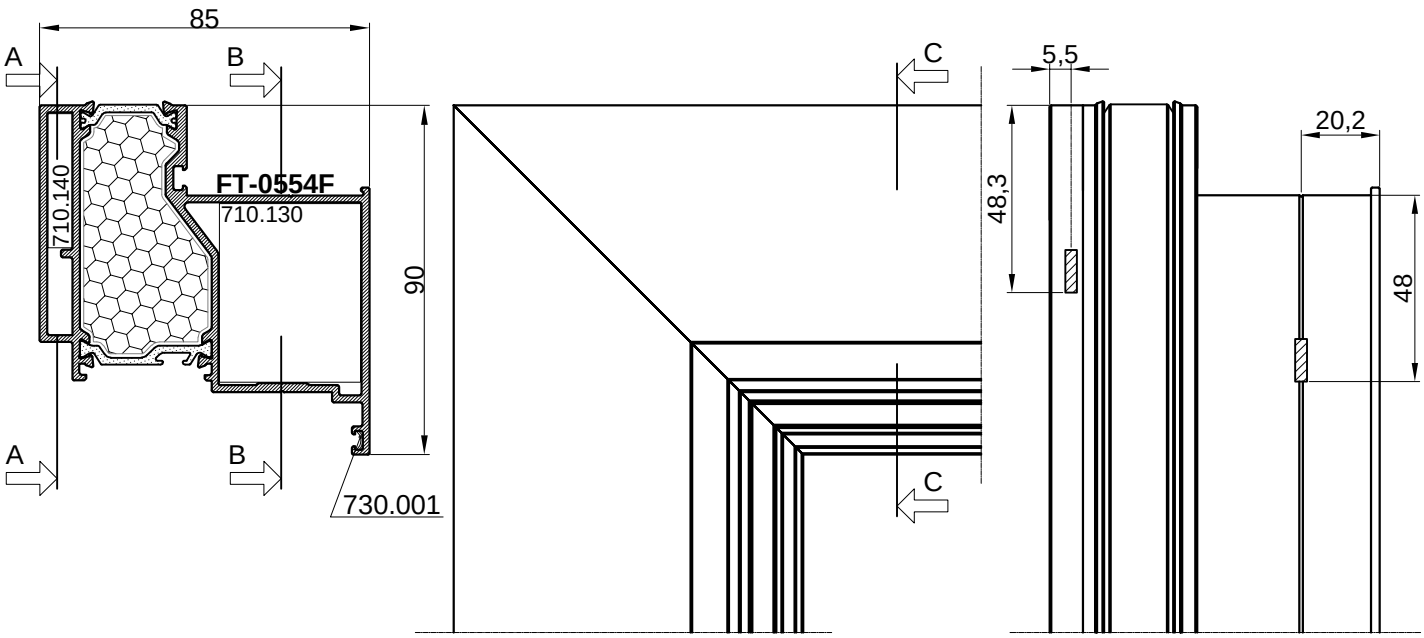


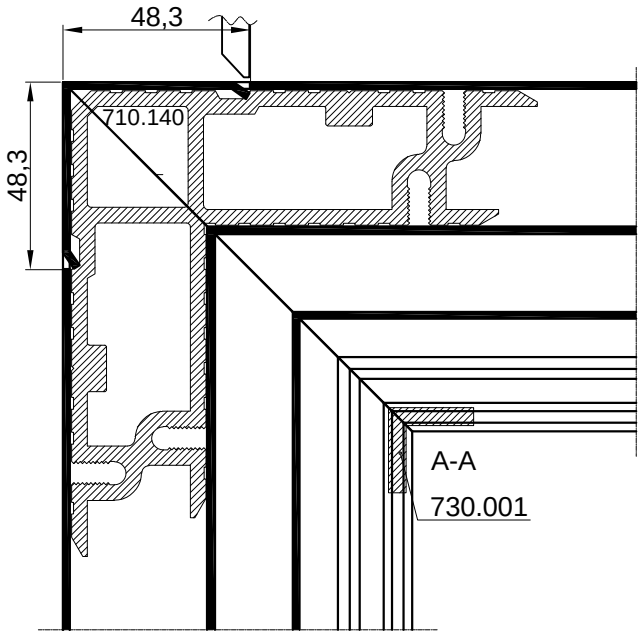

85
A
B
FT-0553F
710.131
710.140
90
730.001
C
5,5
20,25
48,3
74,1
Ø10,5

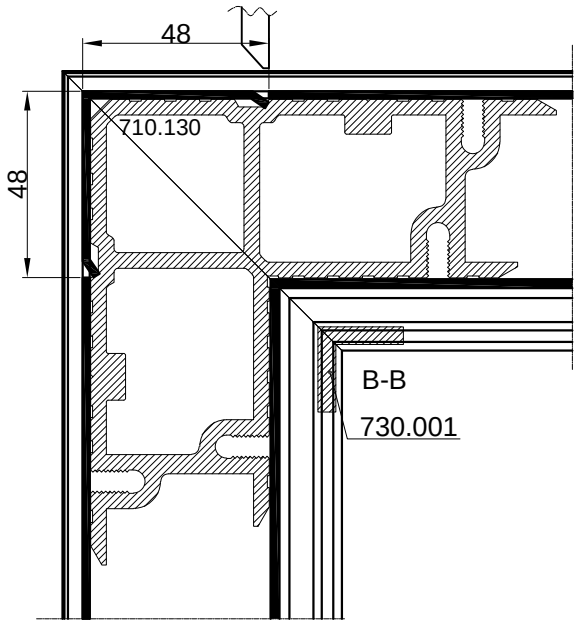

48,3
710.140
48,3
A-A
730.001
74,1
431.266
710.131
74,1
B-B
730.001

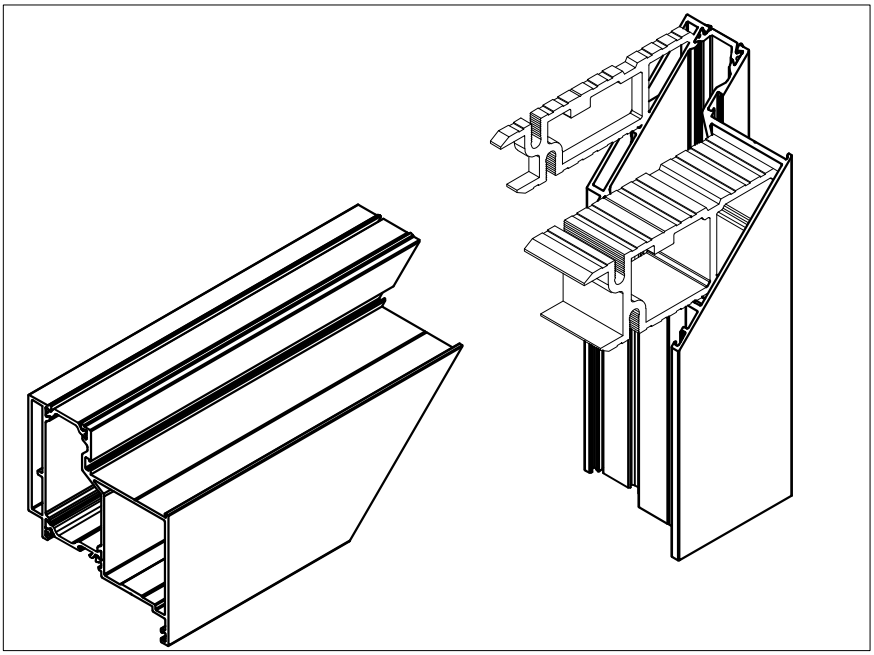

210.005
alat 2....Ø10.5

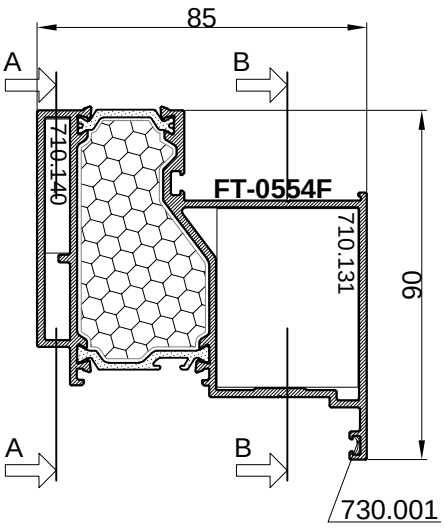


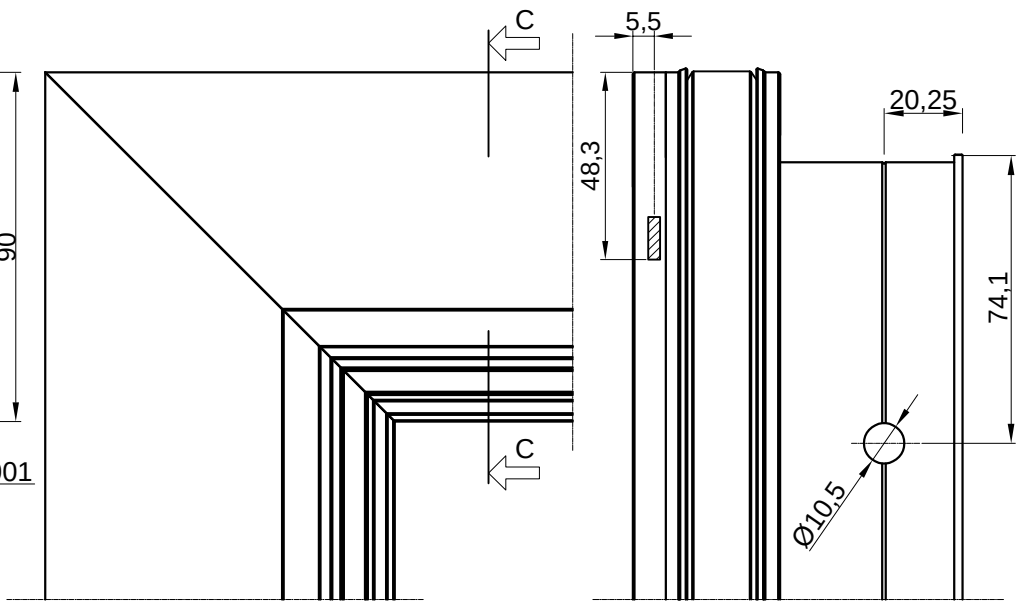

85
A
B
710.140
FT-0554F
710.130
90
730.001
C
5,5
48,3
20,2
48

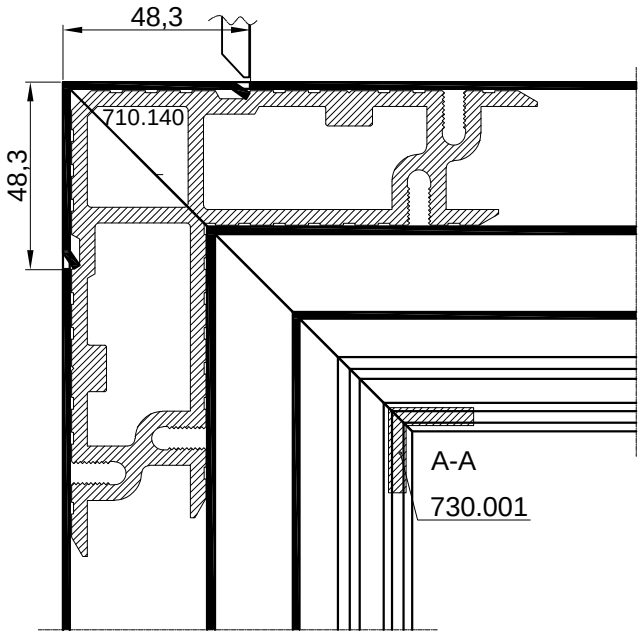

48,3
710.140
48,3
A-A
730.001

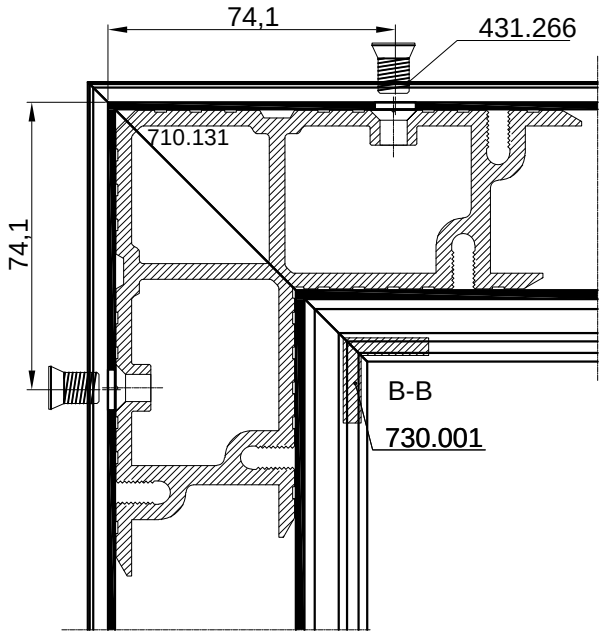

48
710.130
48
B-B
730.001

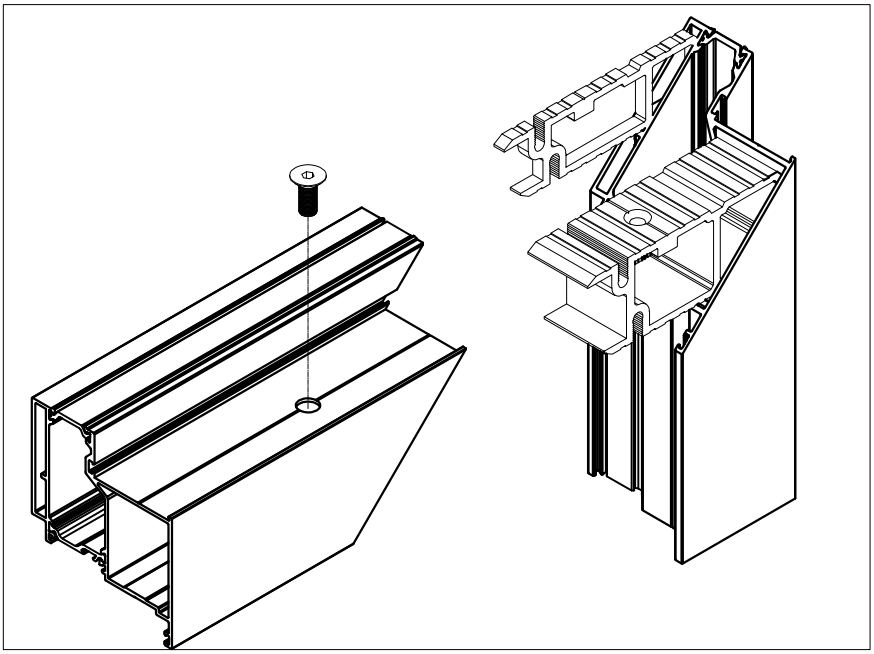


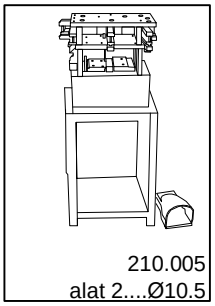

85
A
B
710.140
FT-0554F
710.131
90
A
B
730.001

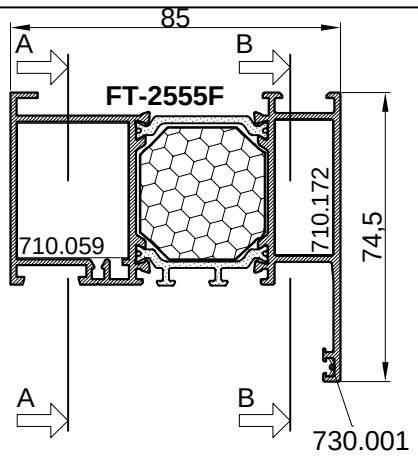

C
5,5
48,3
20,25
74,1
C
Ø10,5

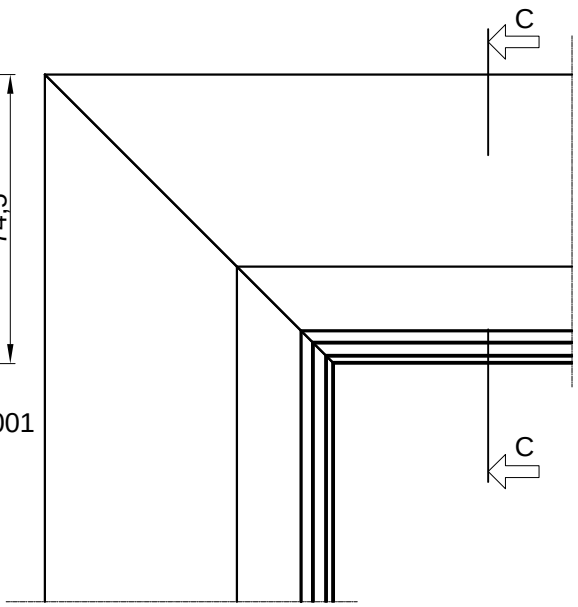

48,3
48,3
710.140
A-A
730.001

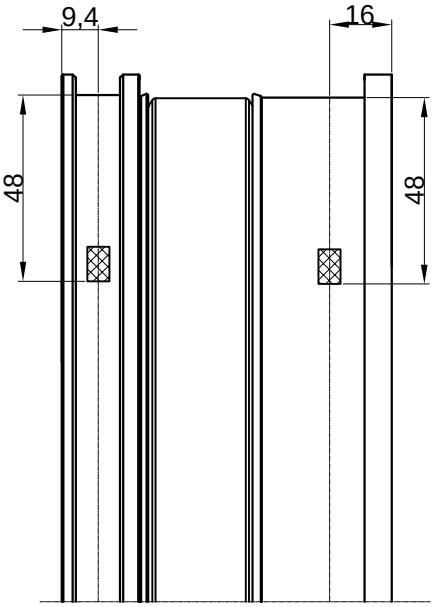

74,1
431.266
74,1
710.131
B-B
730.001

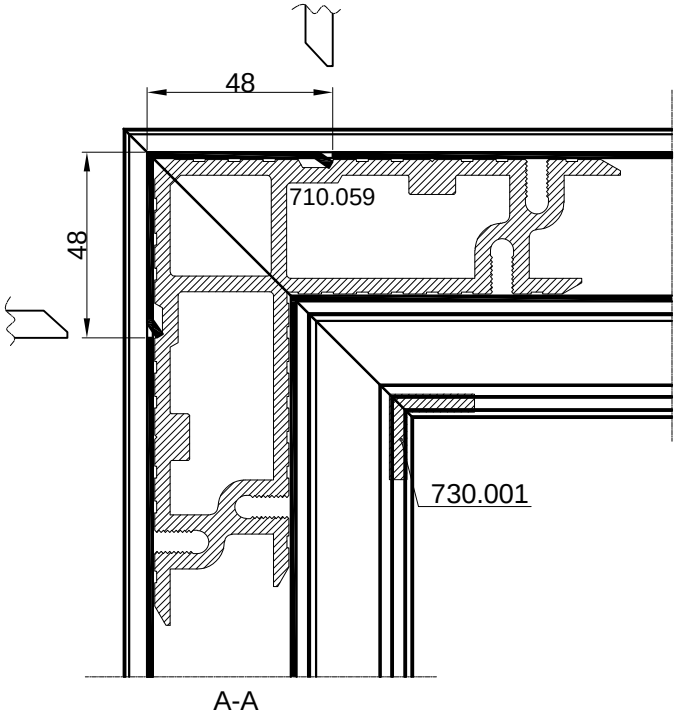



210.005
alat 2....Ø10.5

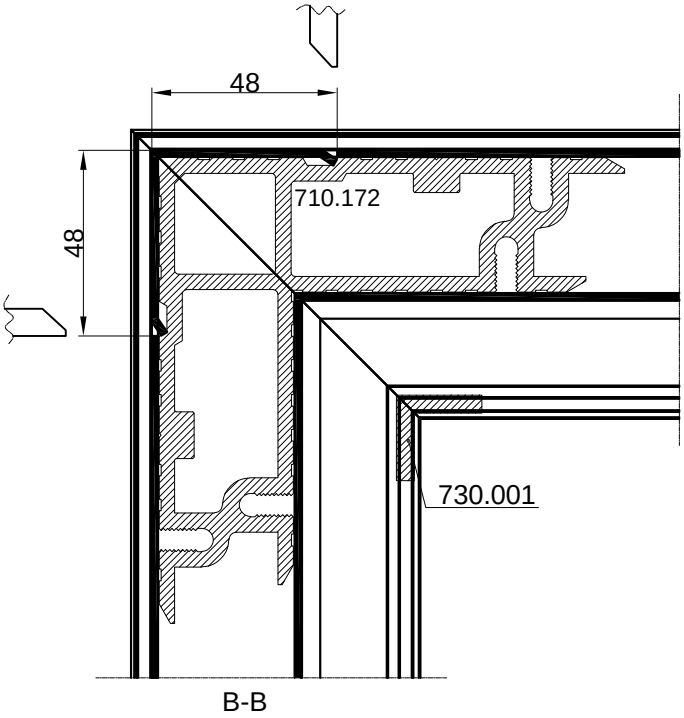

85
A
B
FT-2555F
710.059
710.172
74,5
A
B
730.001


C
C

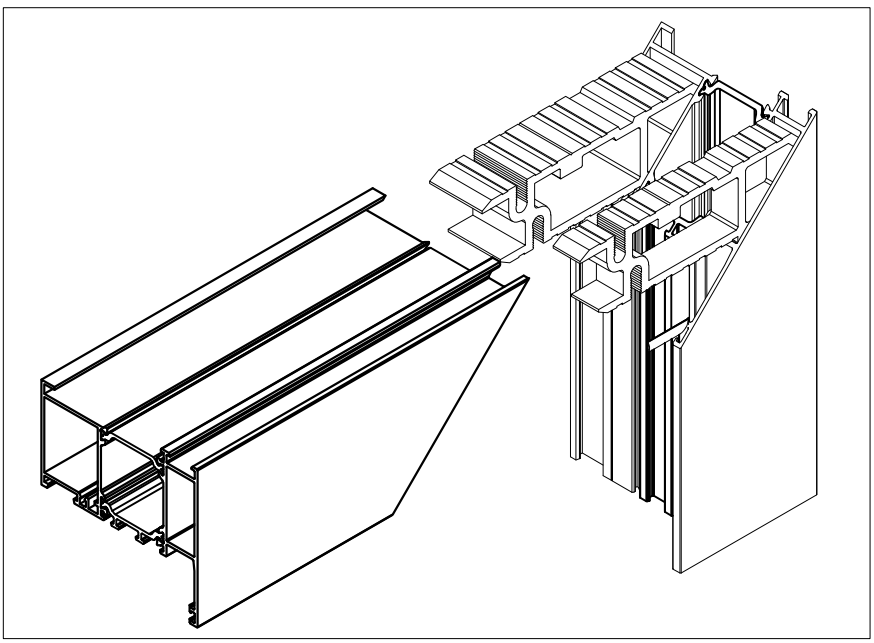

9,4
16
48
48

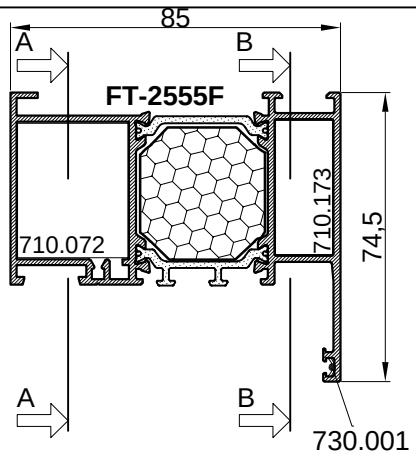

48
48
710.059
730.001

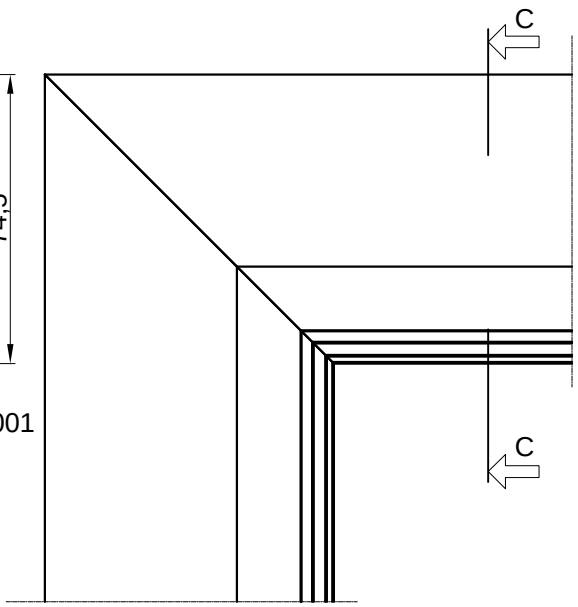
A-A

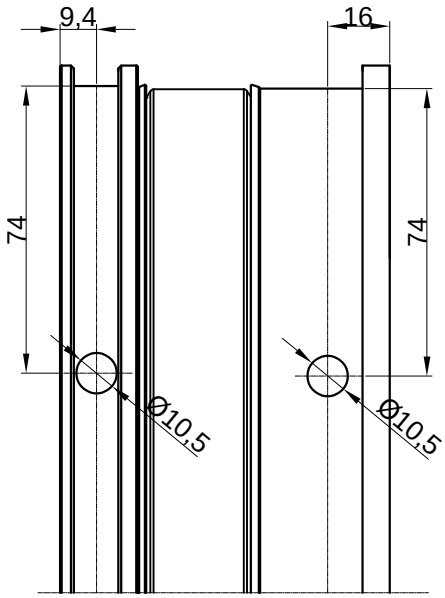

48
48
710.172
730.001

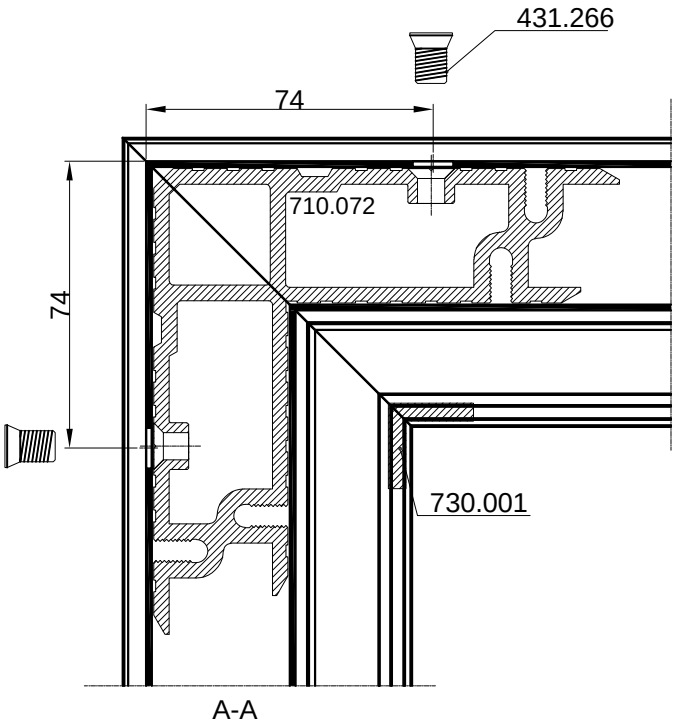
B-B



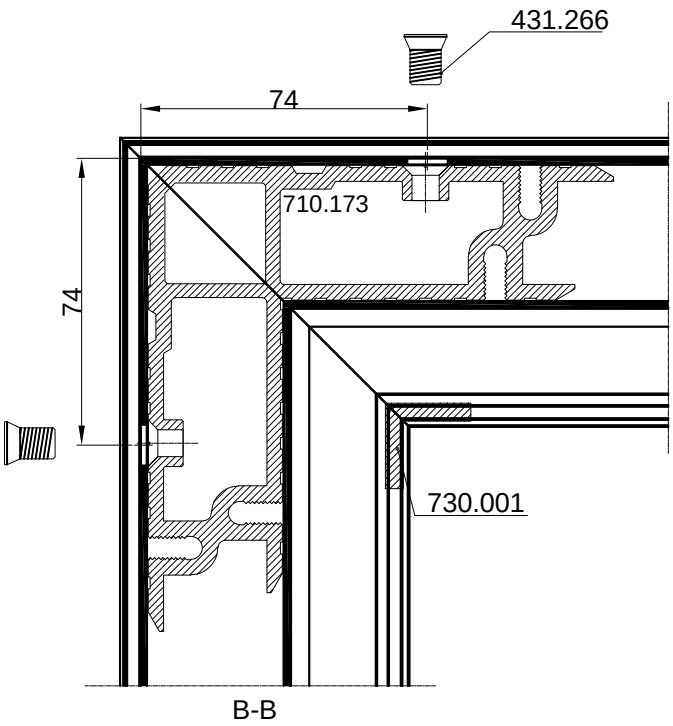

85
A
B
FT-2555F
710.072
710.173
74,5
A
B
730.001


C
C

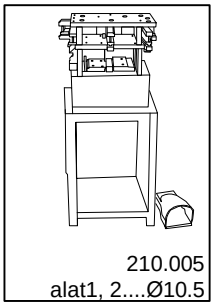

9,4
16
74
74
Ø10,5
Ø10,5

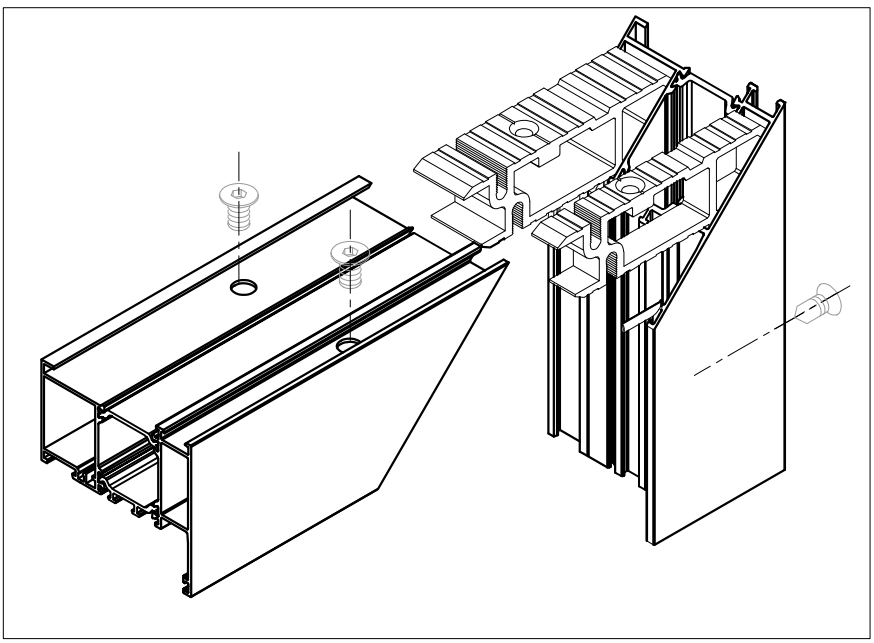

431.266
74
710.072
74
730.001

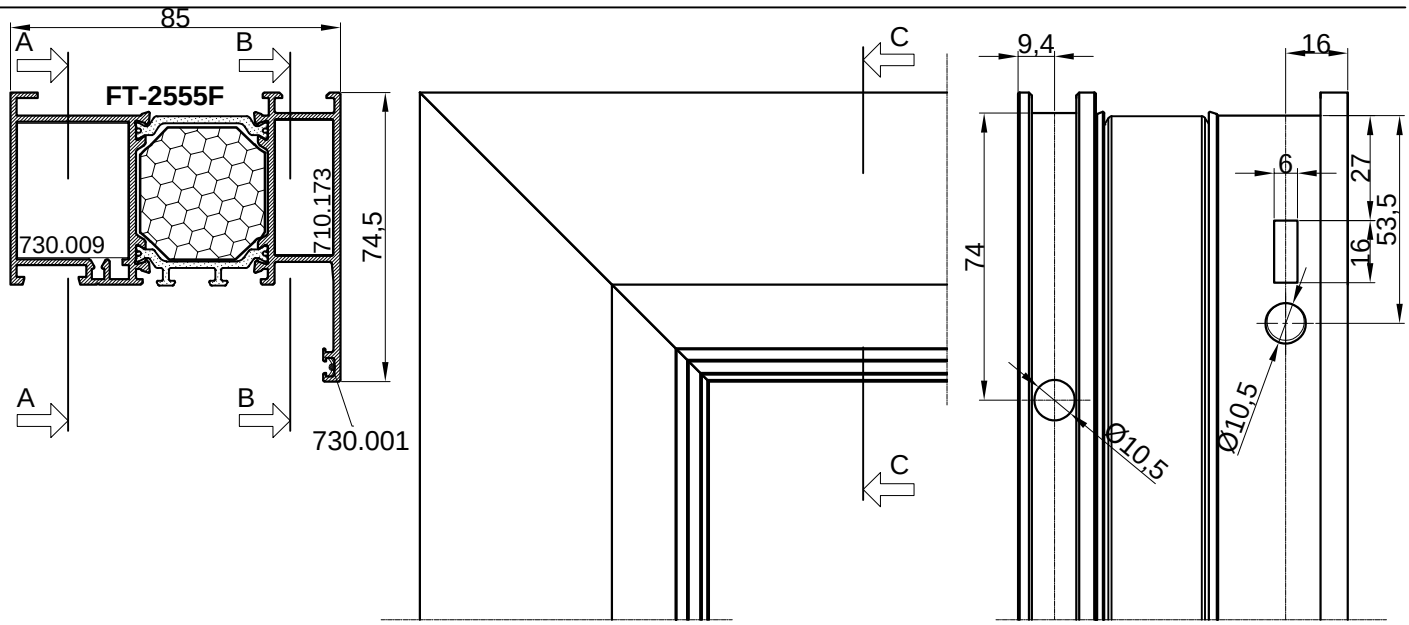
A-A

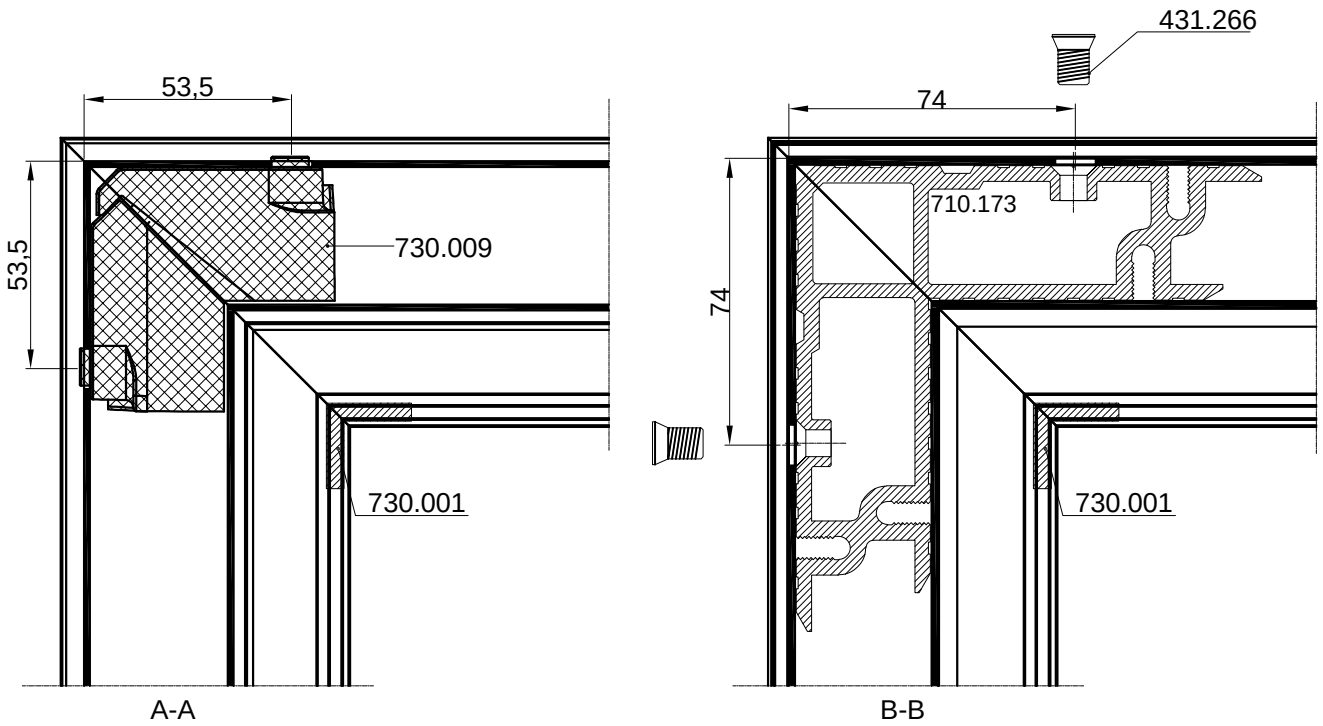

431.266
74
710.173
74
730.001

B-B


210.005
alat1, 2....Ø10.5

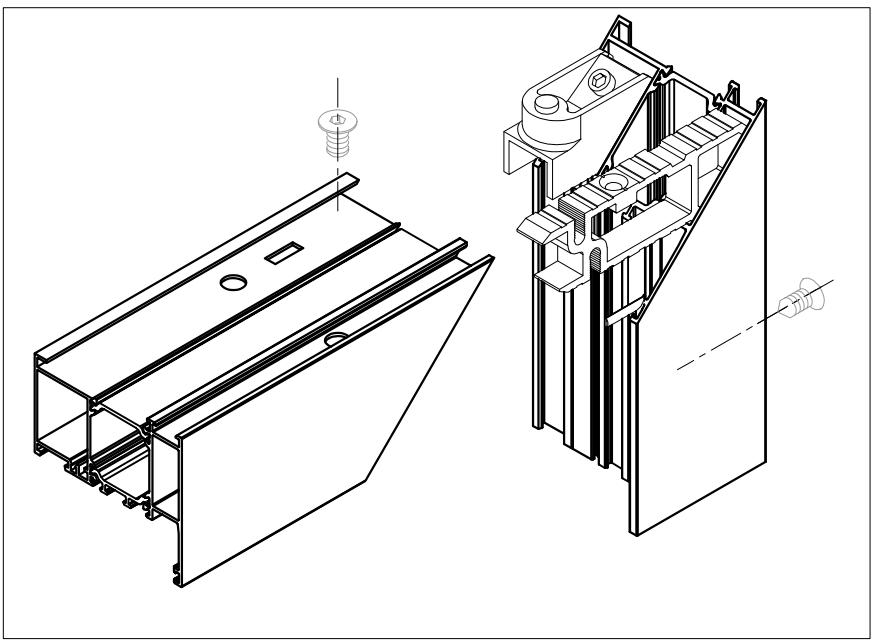


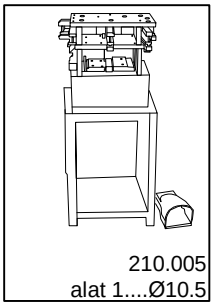

85
A
B
FT-2555F
730.009
710.173
74,5
730.001
C
9,4
16
74
6
27
53,5
16
Ø10,5
Ø10,5

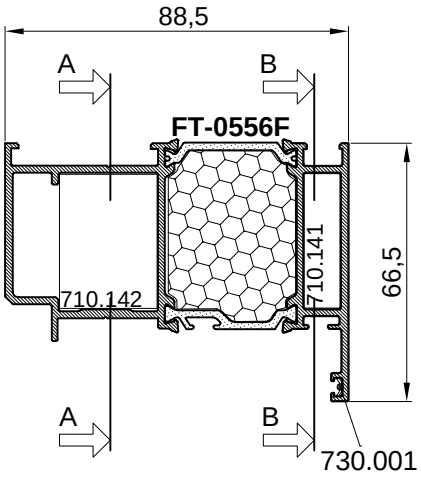

431.266
53,5
53,5
730.009
730.001
74
710.173
74
730.001

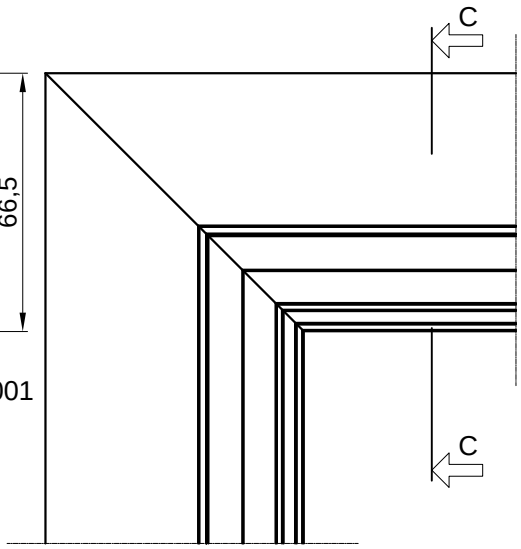
A-A

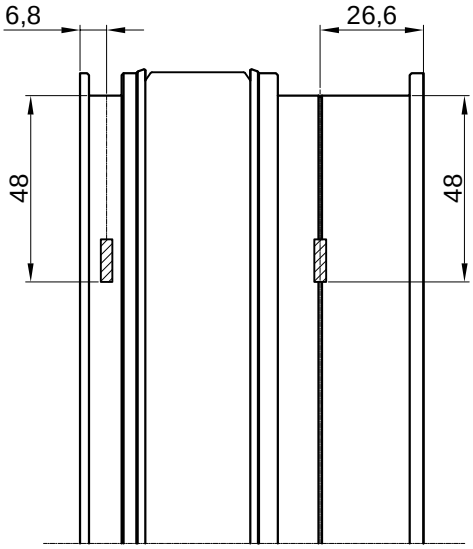
B-B

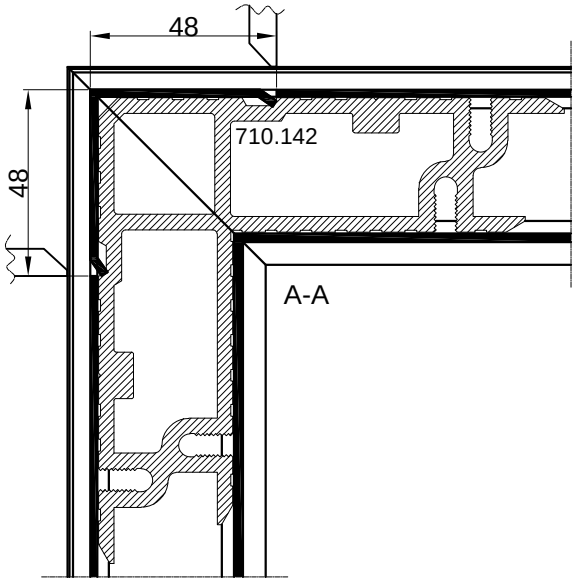


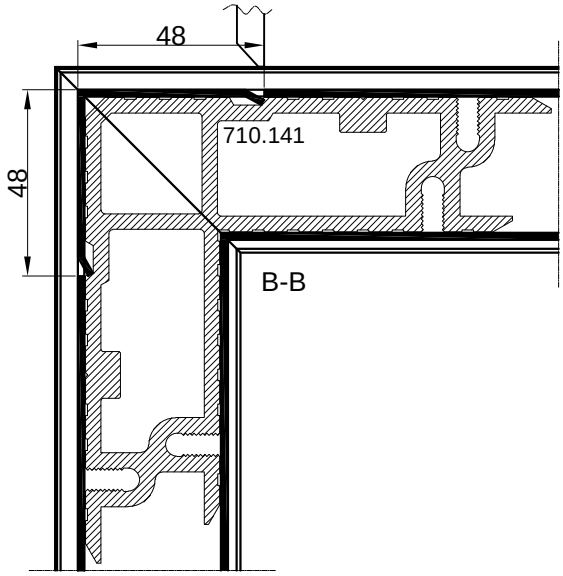

210.005
alat 1....Ø10.5

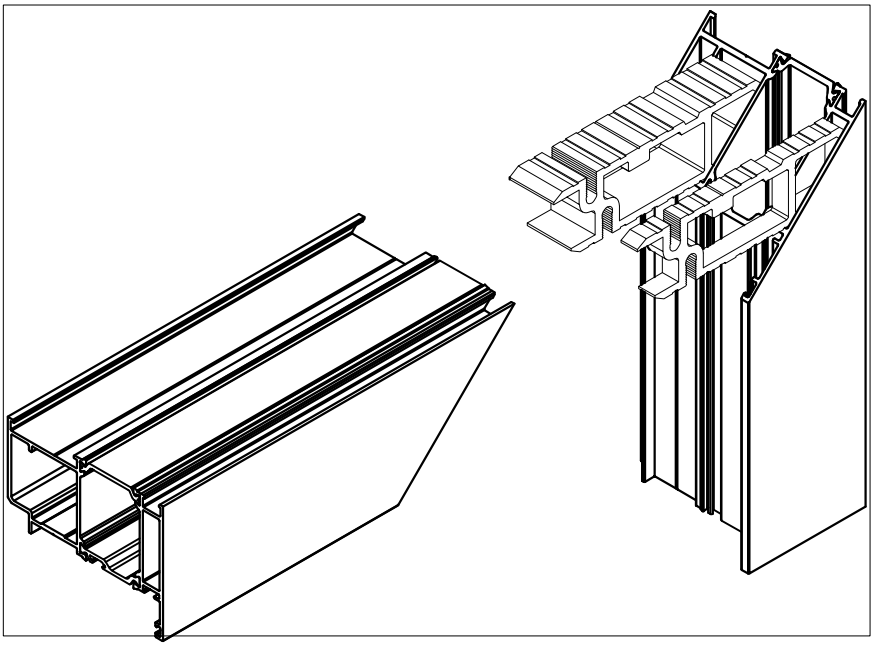

88,5
A
B
FT-0556F
710.142
710.141
66,5
A
B
730.001

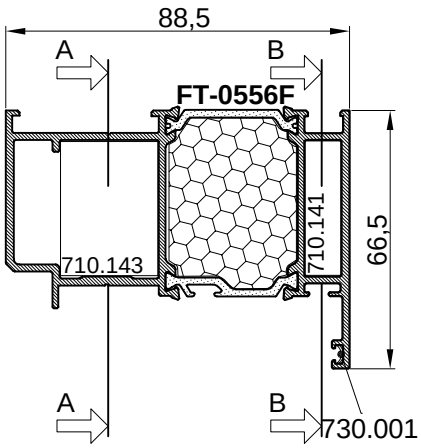

C
C

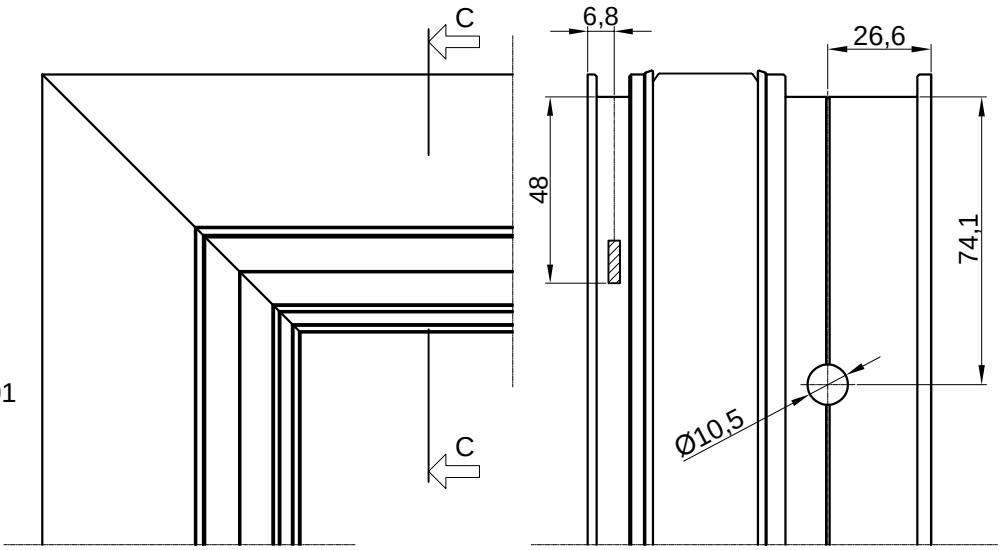

6,8
26,6
48
48

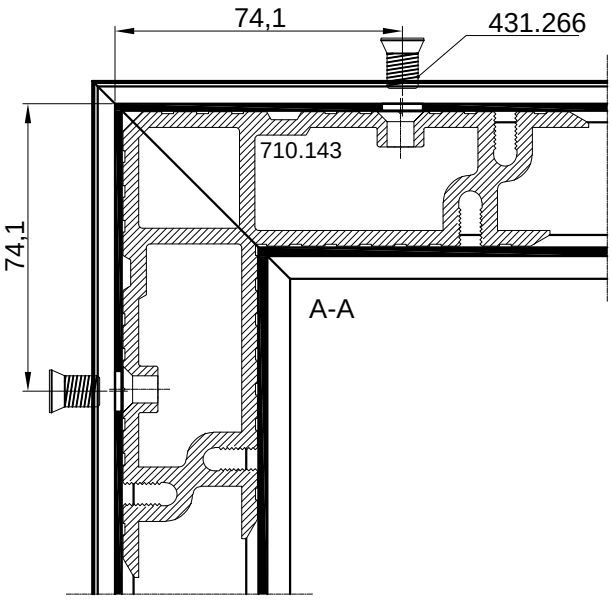

48
48
710.142
A-A

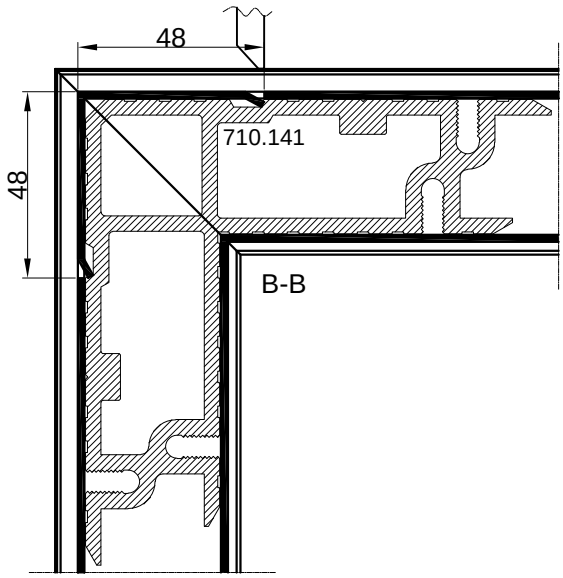

48
48
710.141
B-B

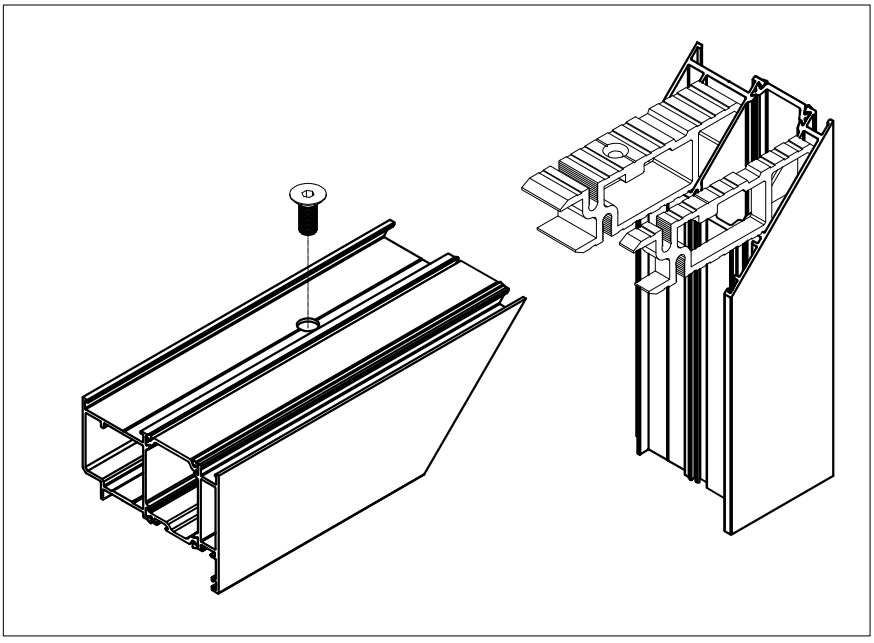


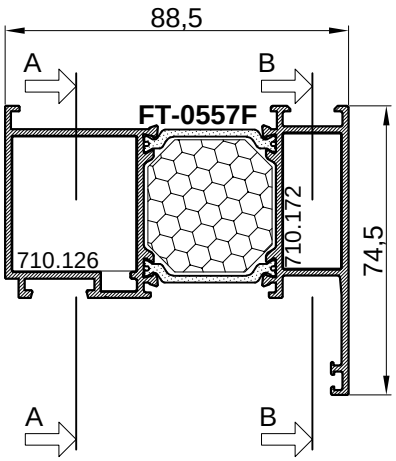

88,5
A
B
FT-0556F
710.143
710.141
66,5
A
B
730.001

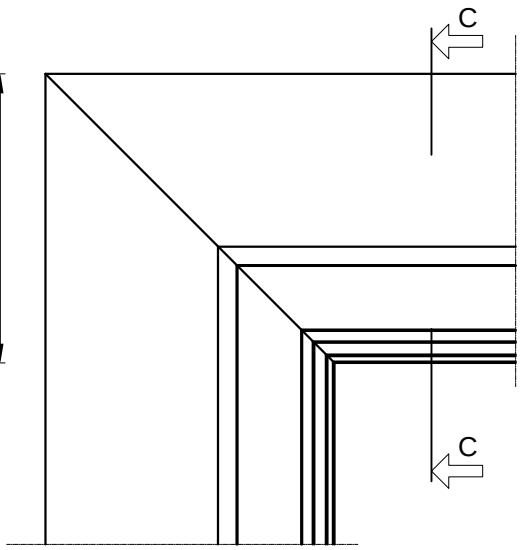

C
6,8
26,6
48
74,1
Ø10,5
C

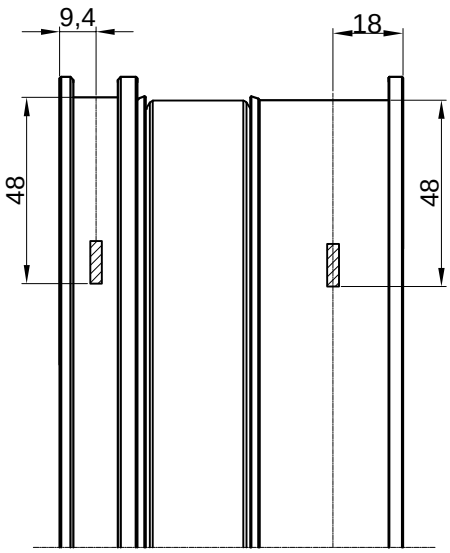

74,1
431.266
710.143
74,1
A-A

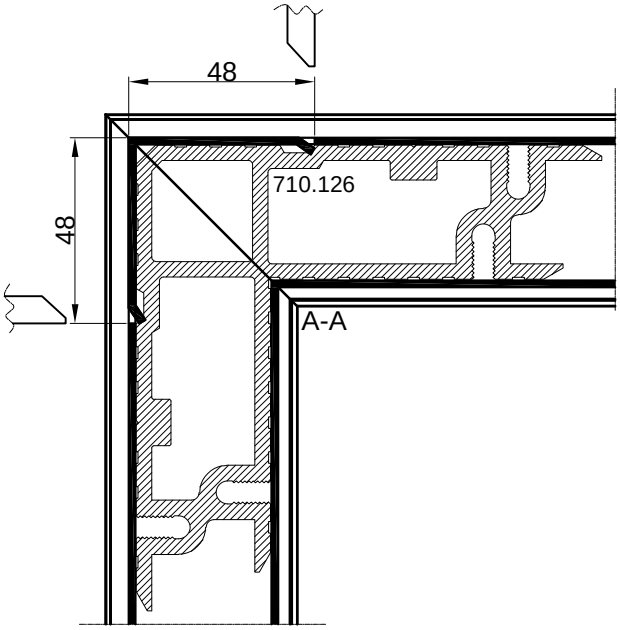

48
710.141
48
B-B

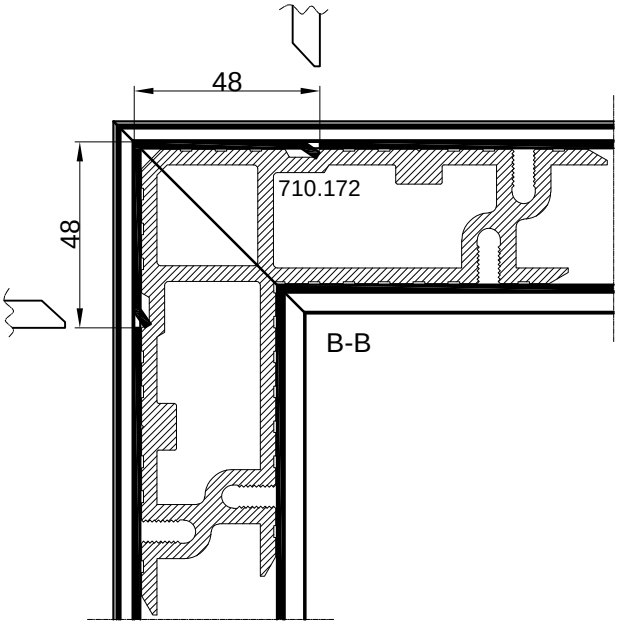


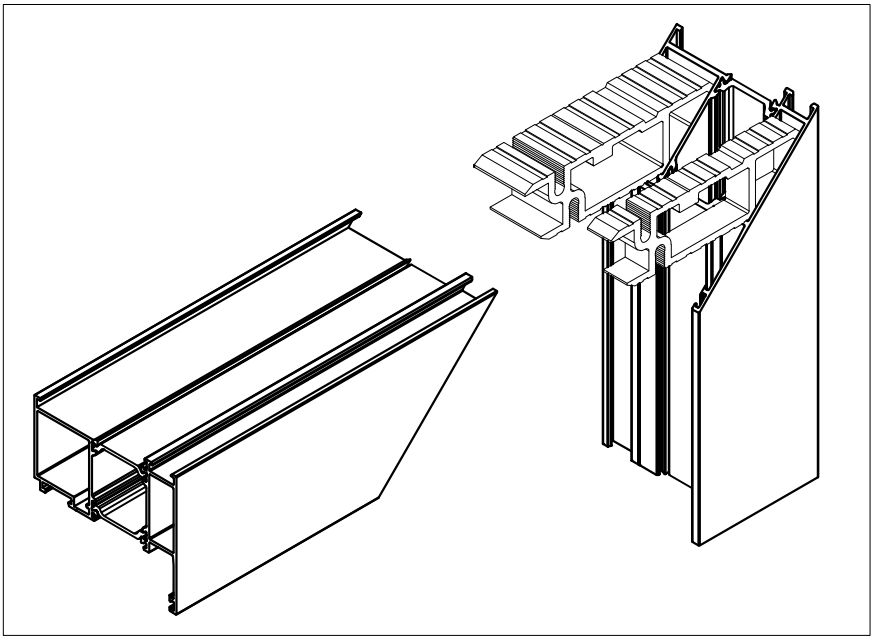

88,5
A
B
FT-0557F
710.172
710.126
74,5
A
B

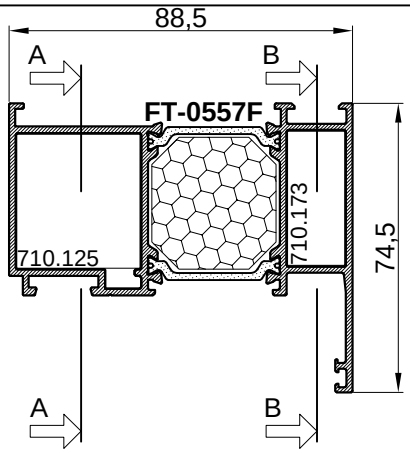

C
C

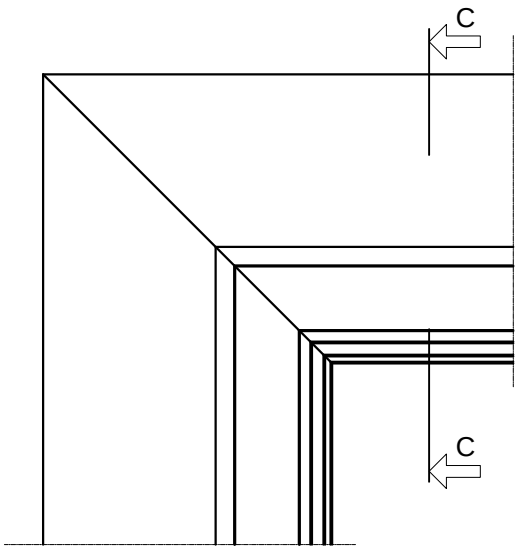

9,4
18
48
48

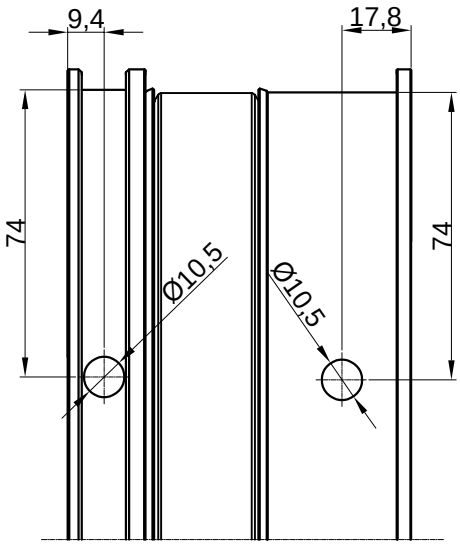

48
48
710.126
A-A

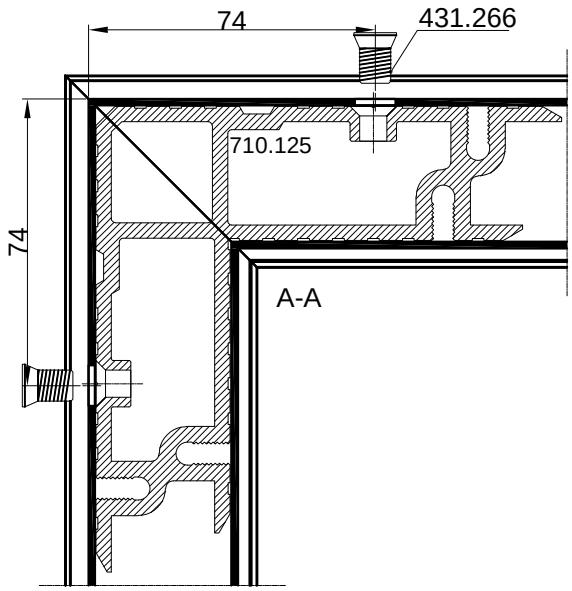

48
48
710.172
B-B

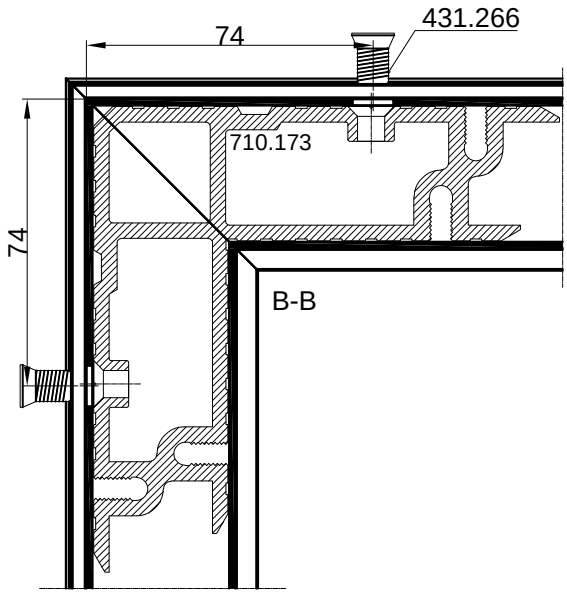


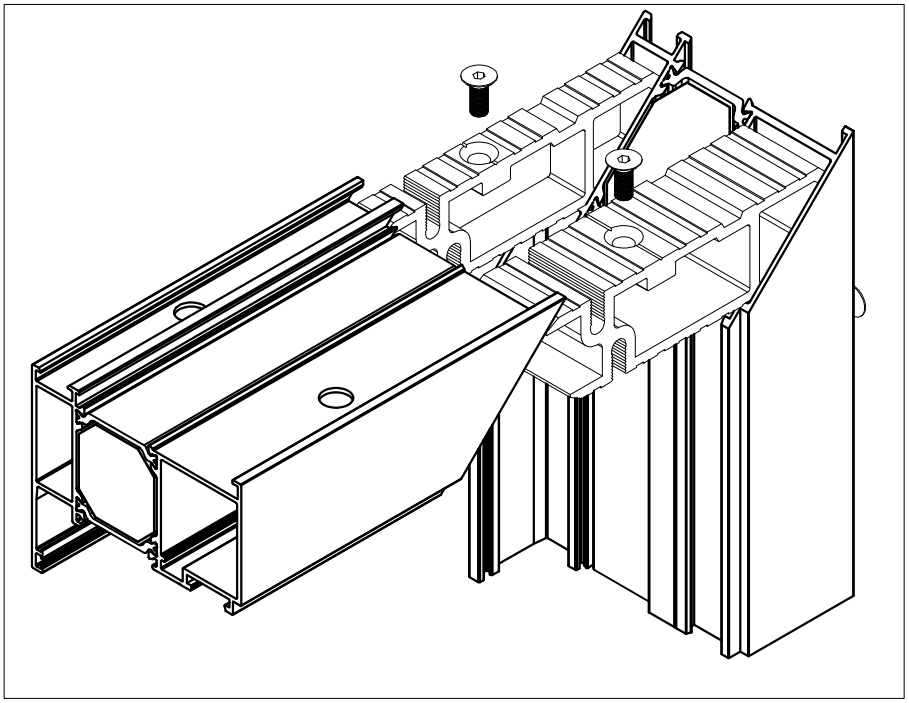

88,5
A
B
FT-0557F
710.173
710.125
74,5
A
B

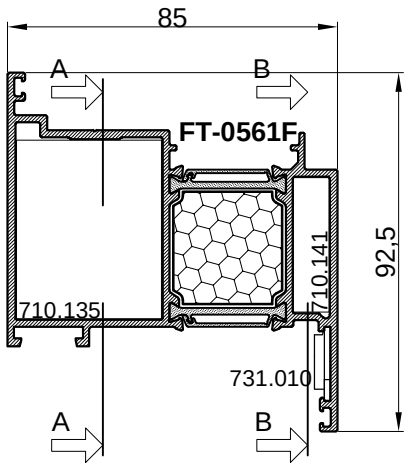

C
C

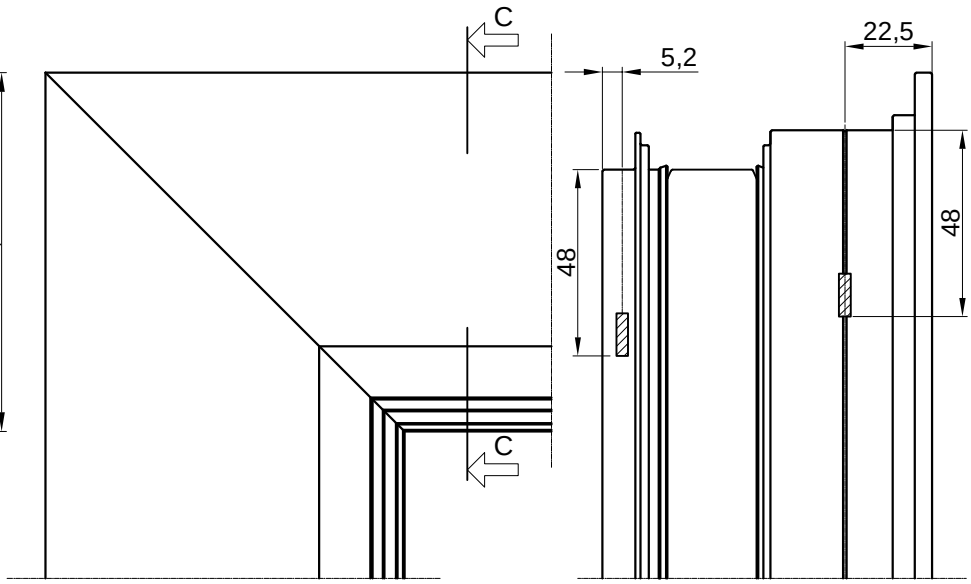

9,4
17,8
74
Ø10,5
Ø10,5
74

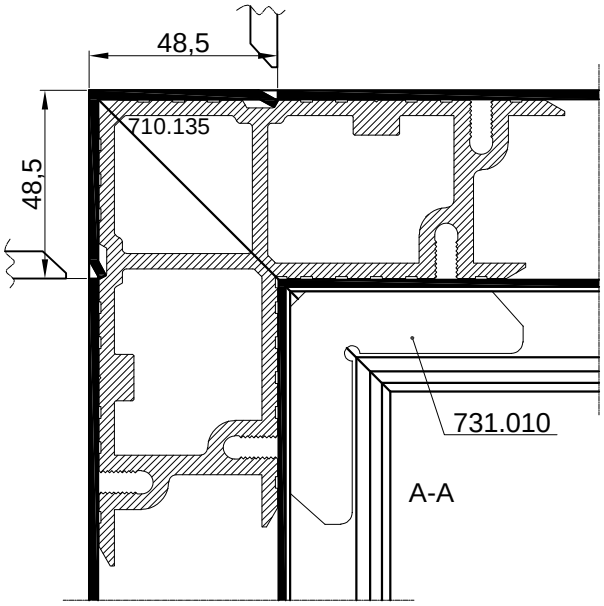

74
431.266
710.125
74
A-A

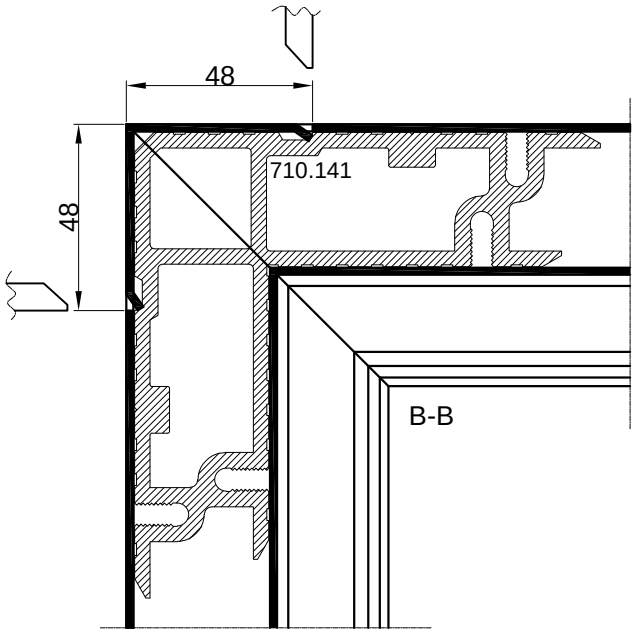

74
431.266
710.173
74
B-B

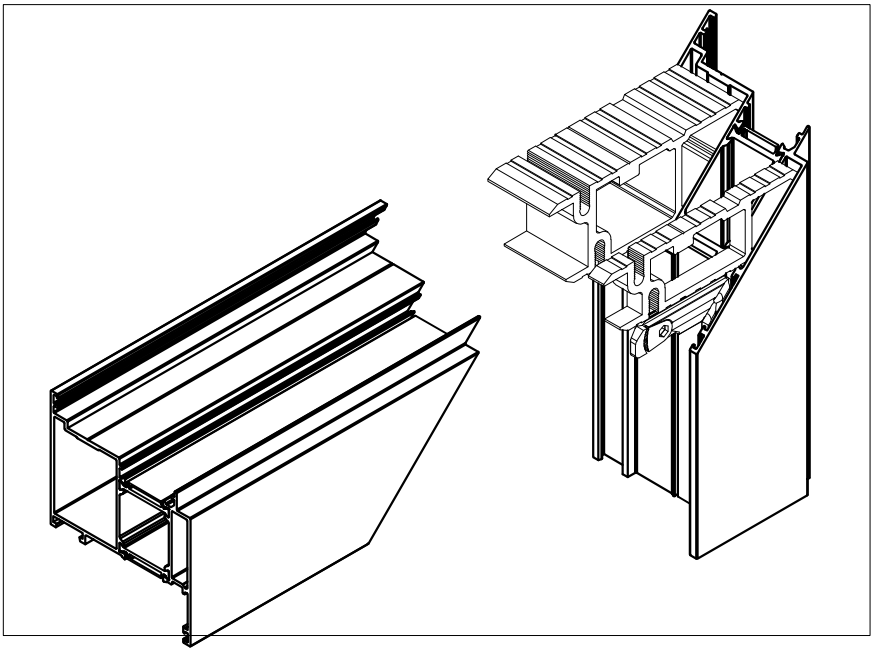


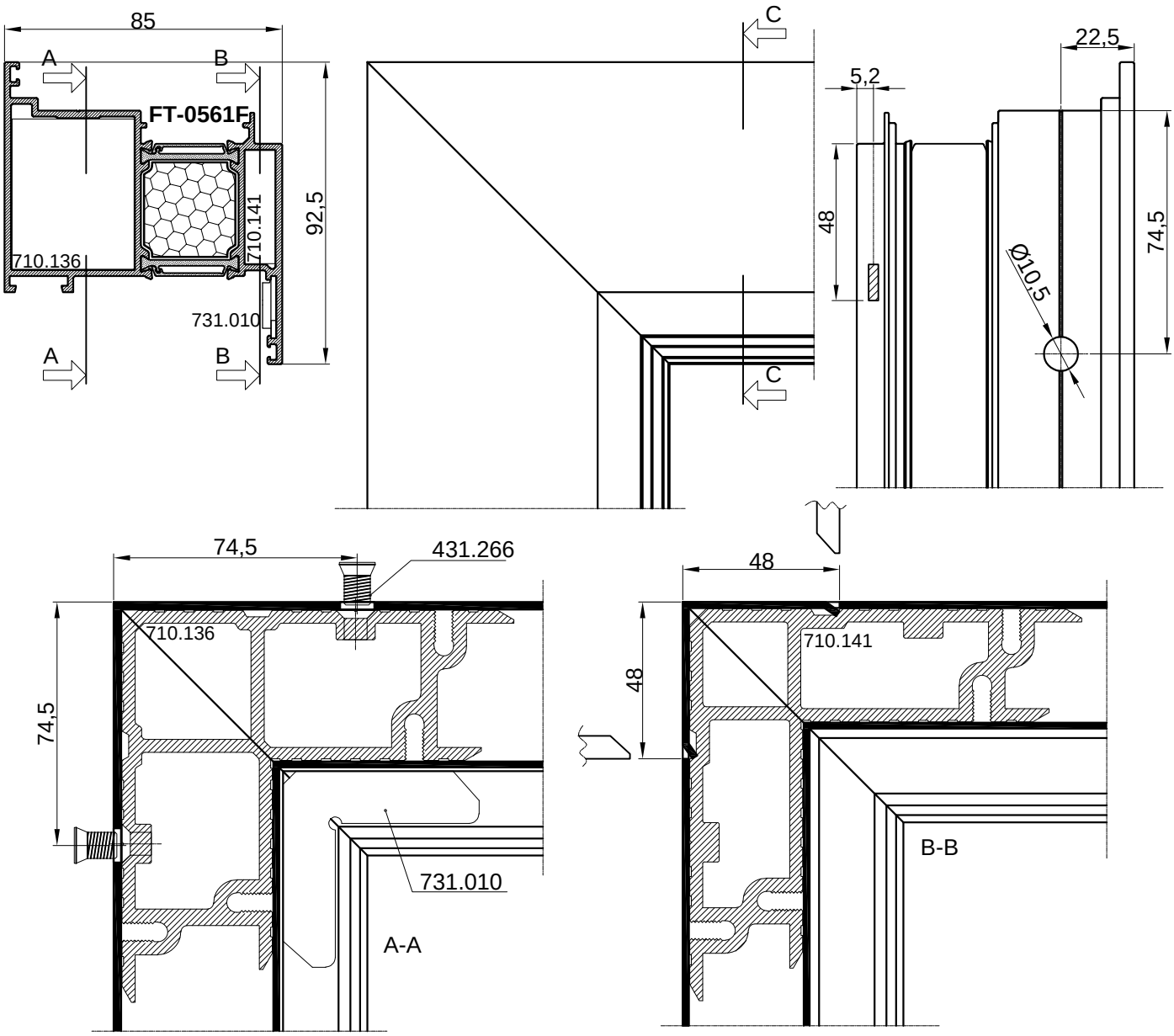

85
A
B
FT-0561F
92,5
710.141
710.135
731.010
A
B

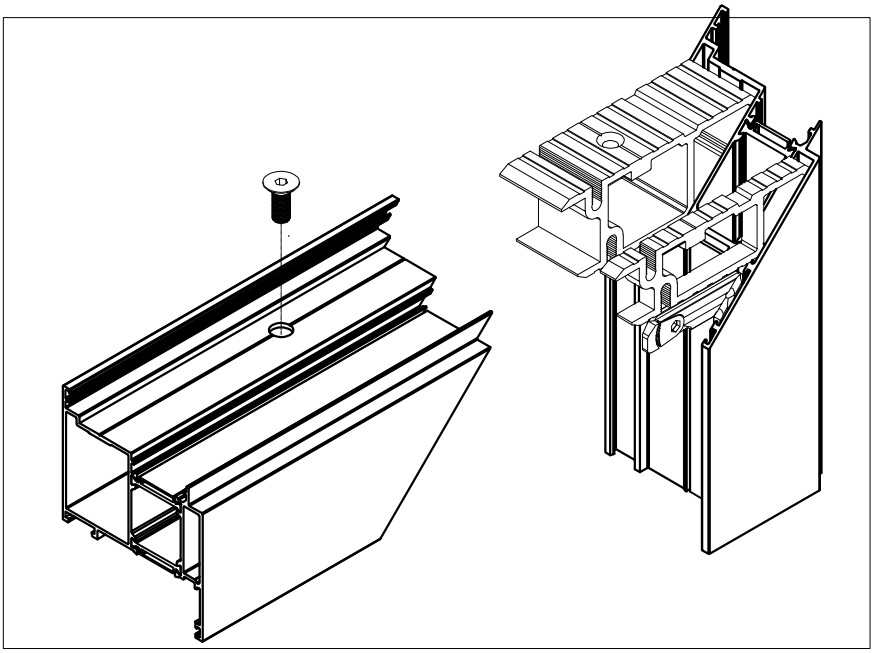

C
5,2
22,5
48
48
C

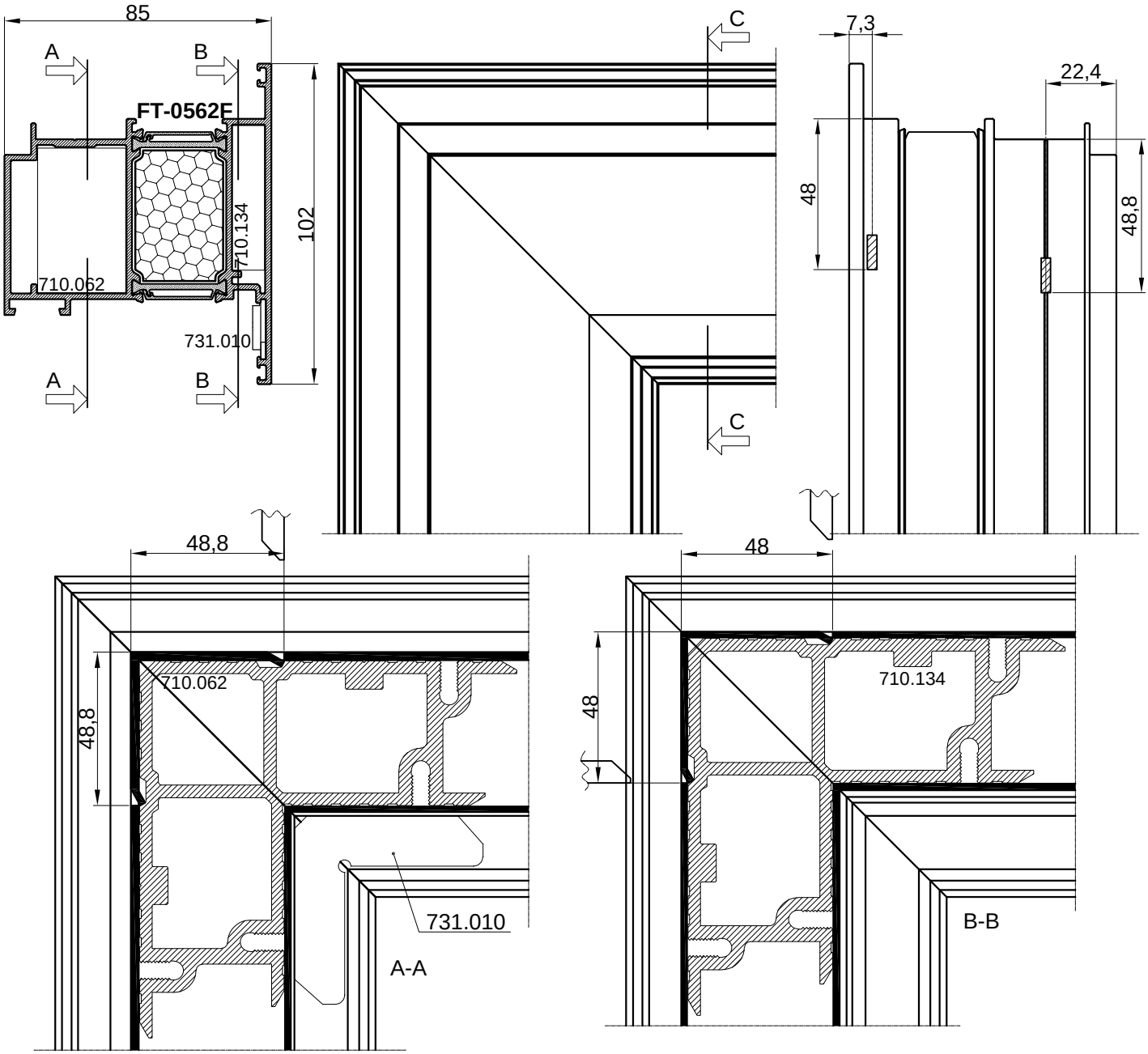

48,5
710.135
48,5
731.010
A-A

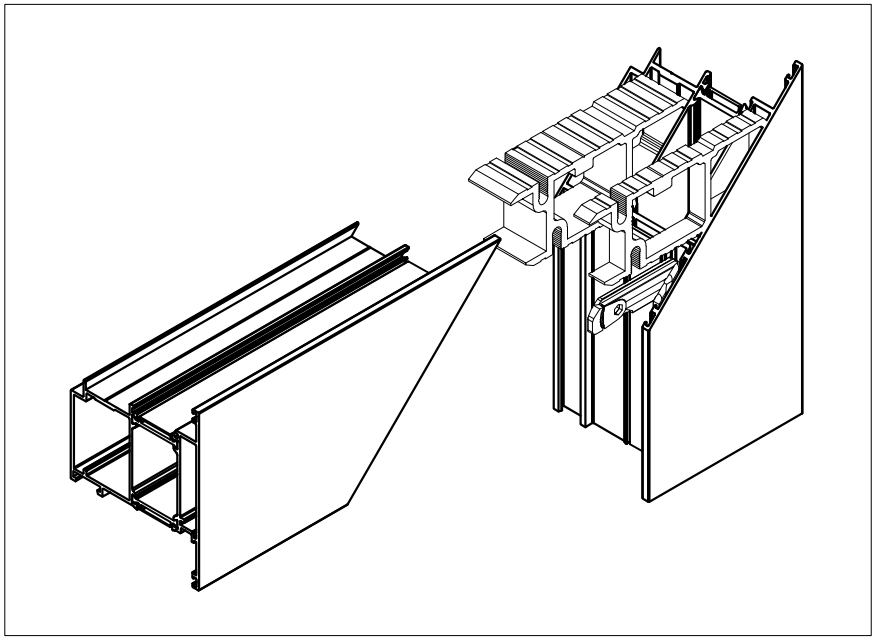

48
710.141
48
B-B

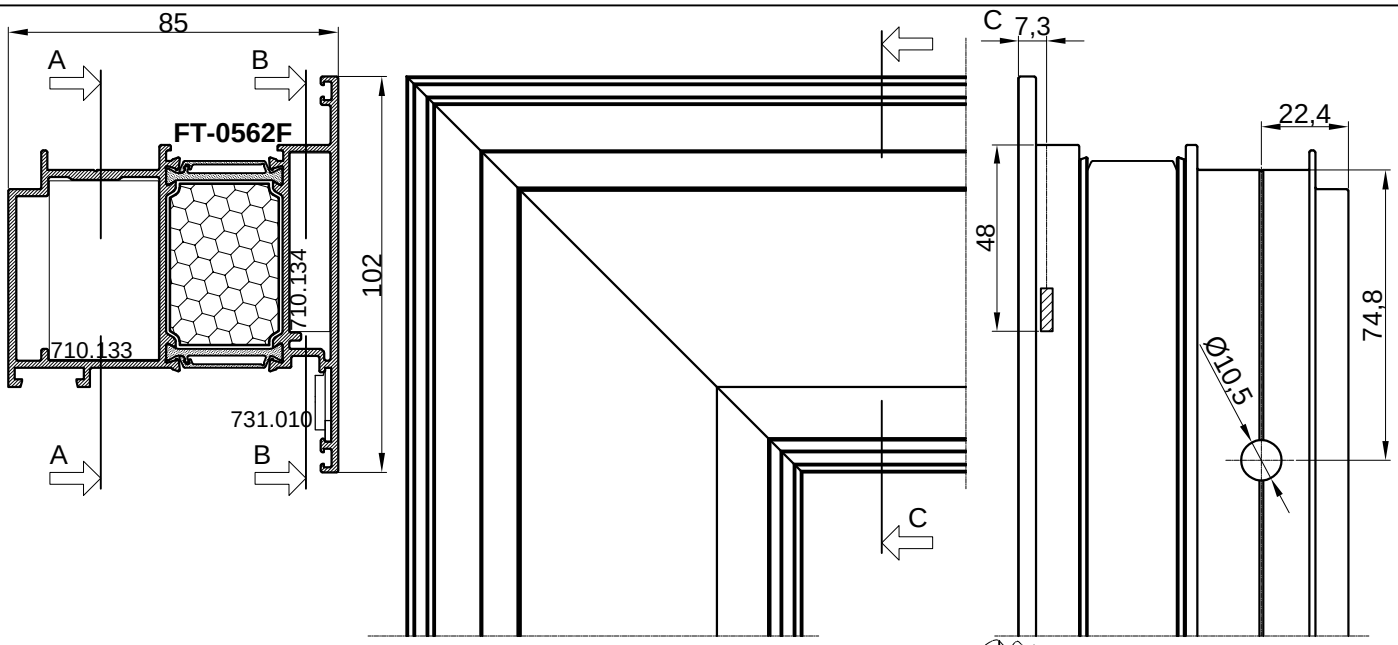


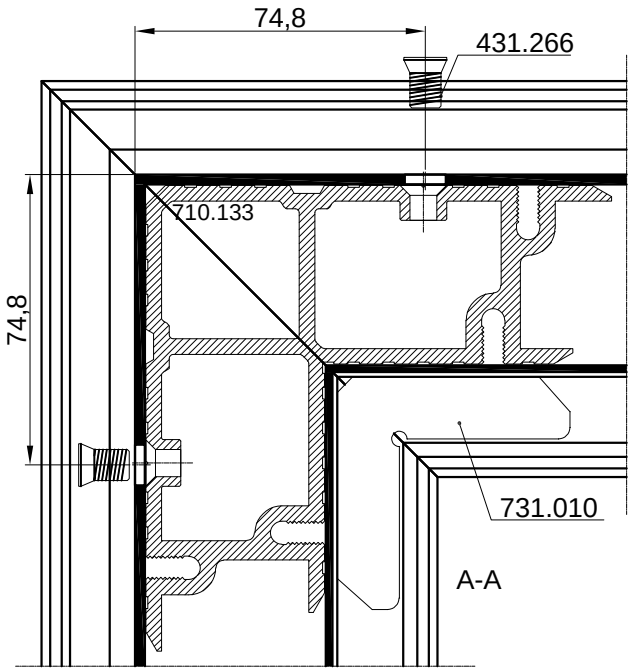

85
A
B
FT-0561F
710.141
92,5
710.136
731.010
A
B
C
C
22,5
5,2
48
Ø10,5
74,5
74,5
431.266
710.136
74,5
731.010
A-A
48
48
710.141
B-B

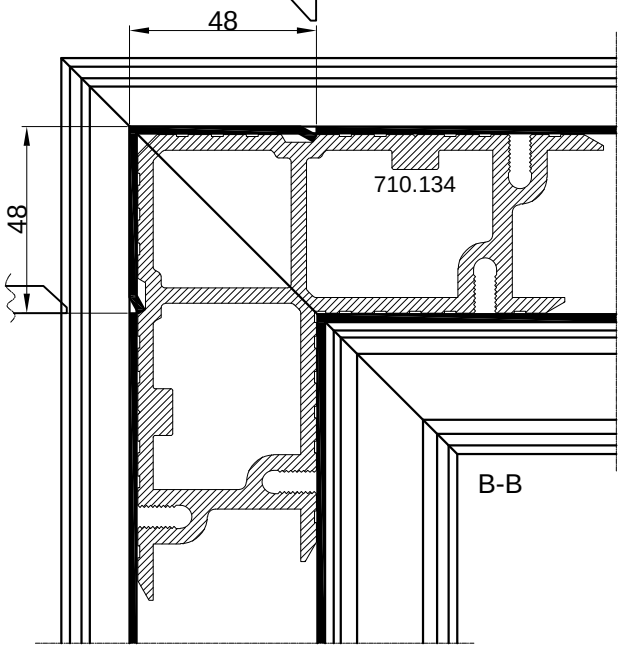


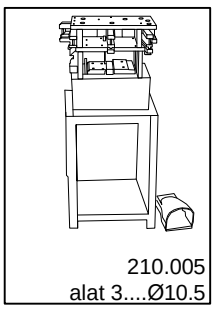

85
A
B
FT-0562F
710.134
102
710.062
731.010
A
B
C
C
7,3
22,4
48
48,8
48,8
48,8
710.062
731.010
A-A
48
48
710.134
B-B

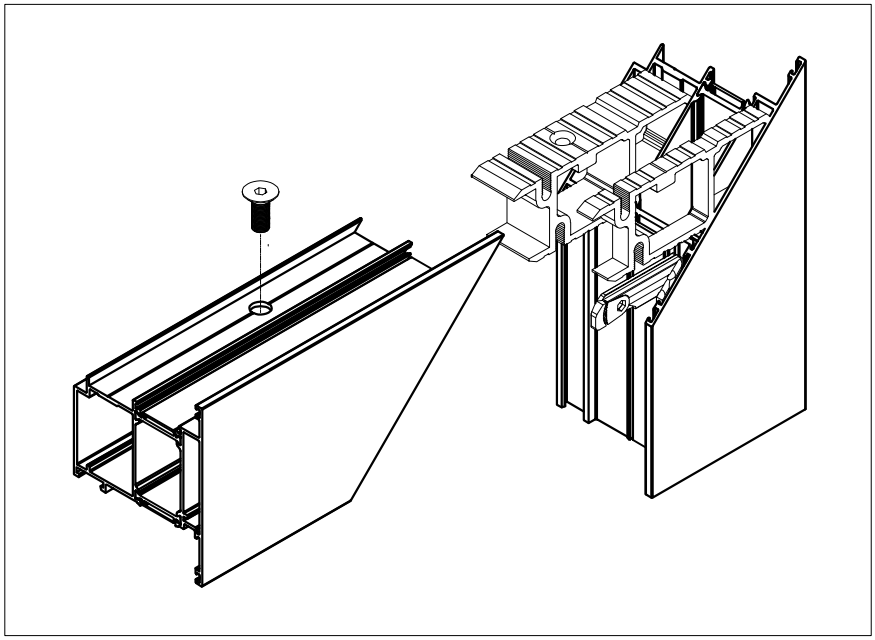


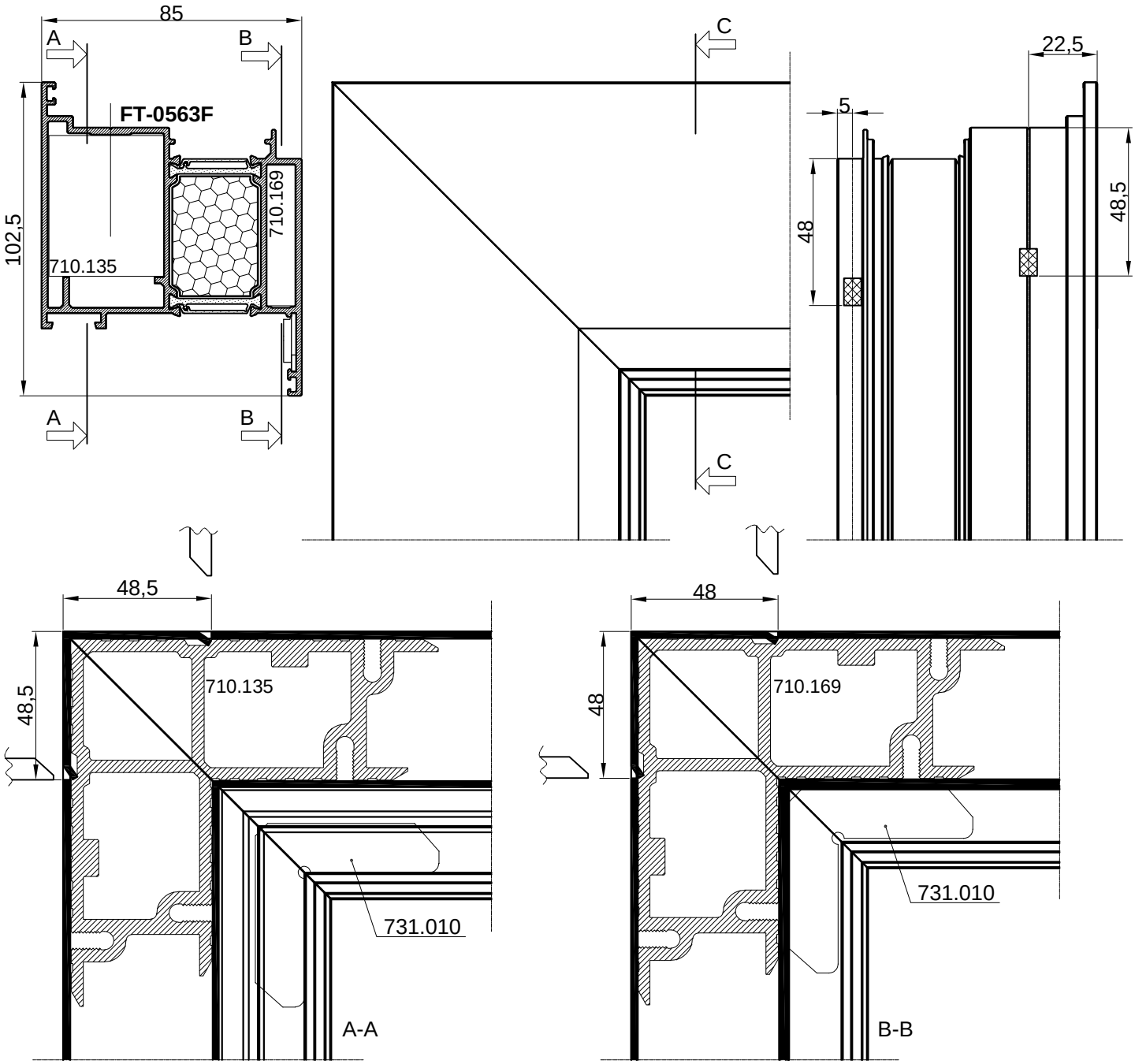

85
A
B
FT-0562F
102
710.134
710.133
731.010
A
B
C
7,3
22,4
48
74,8
Ø10,5
C

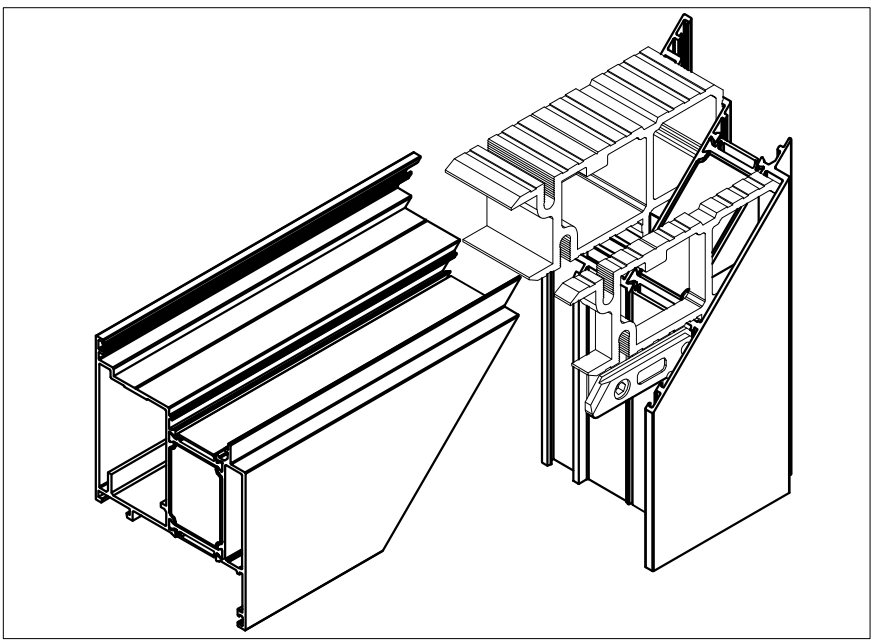

74,8
431.266
710.133
74,8
731.010
A-A

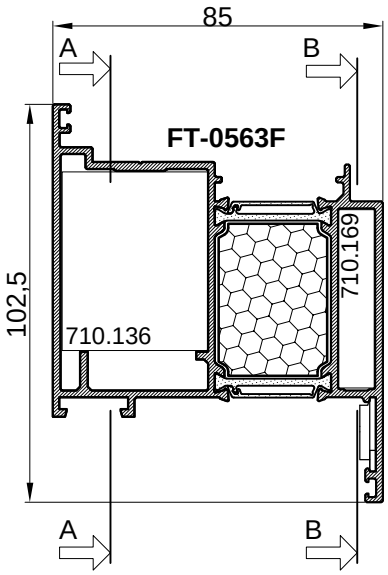

48
710.134
48
B-B

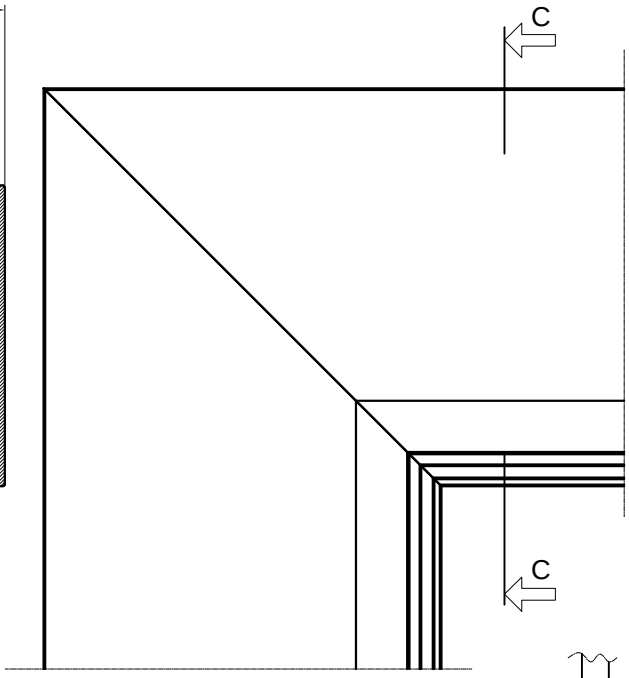

210.005
alat 3....Ø10.5

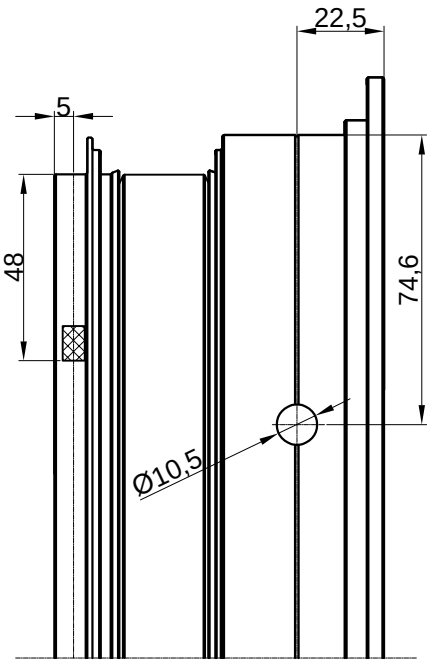


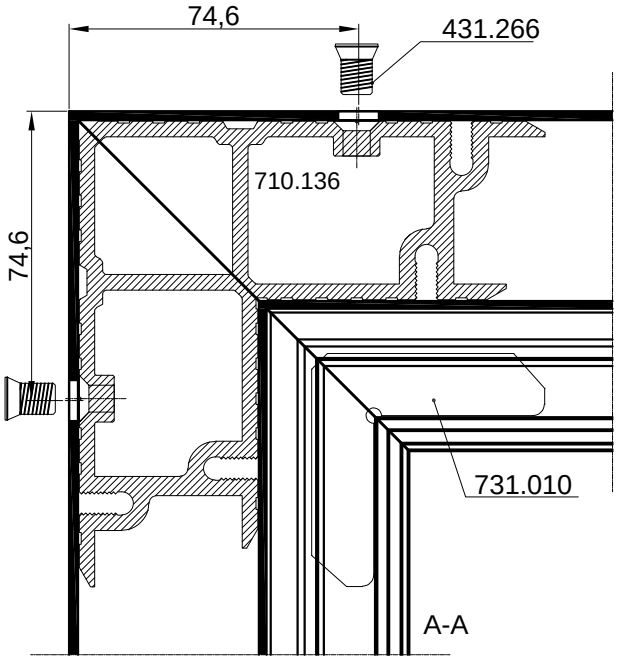

85
A
B
FT-0563F
102,5
710.169
710.135
C
22,5
5
48
48,5
48,5
48,5
710.135
731.010
A-A
48
48
710.169
731.010
B-B

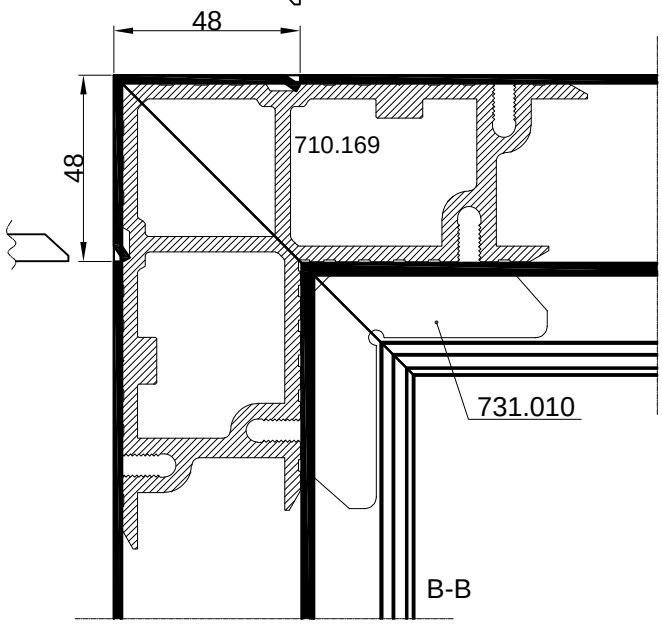


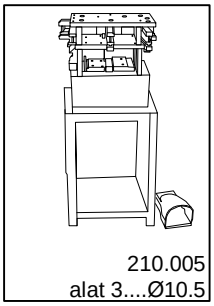

85
A
B
FT-0563F
102,5
710.169
710.136
A
B

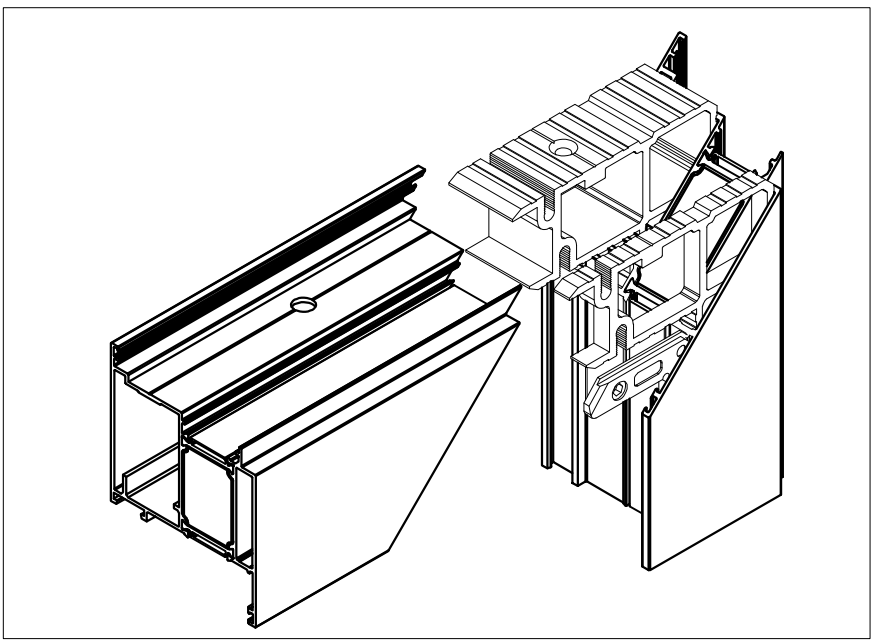

C
C

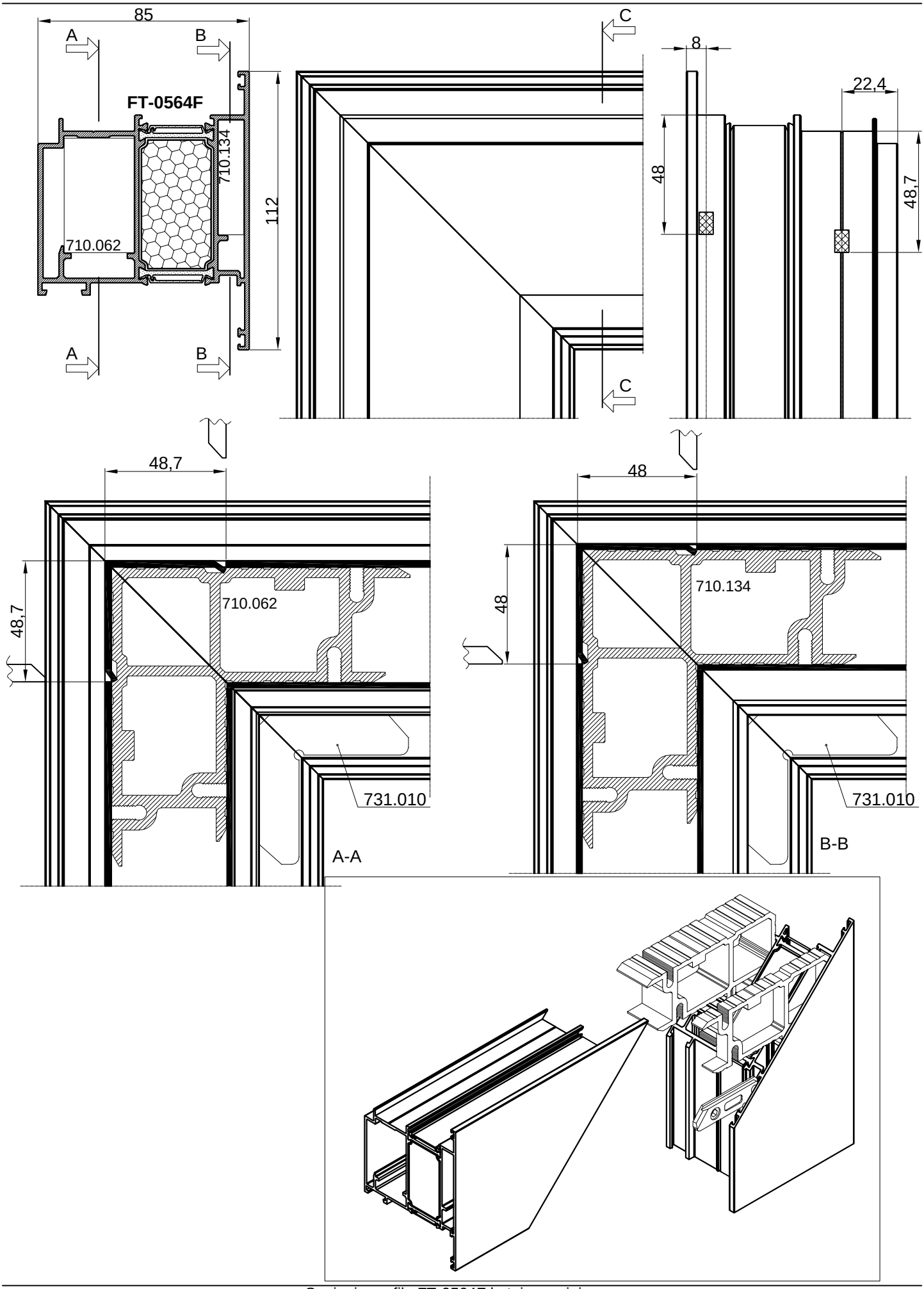

22,5
5
48
74,6
Ø10,5

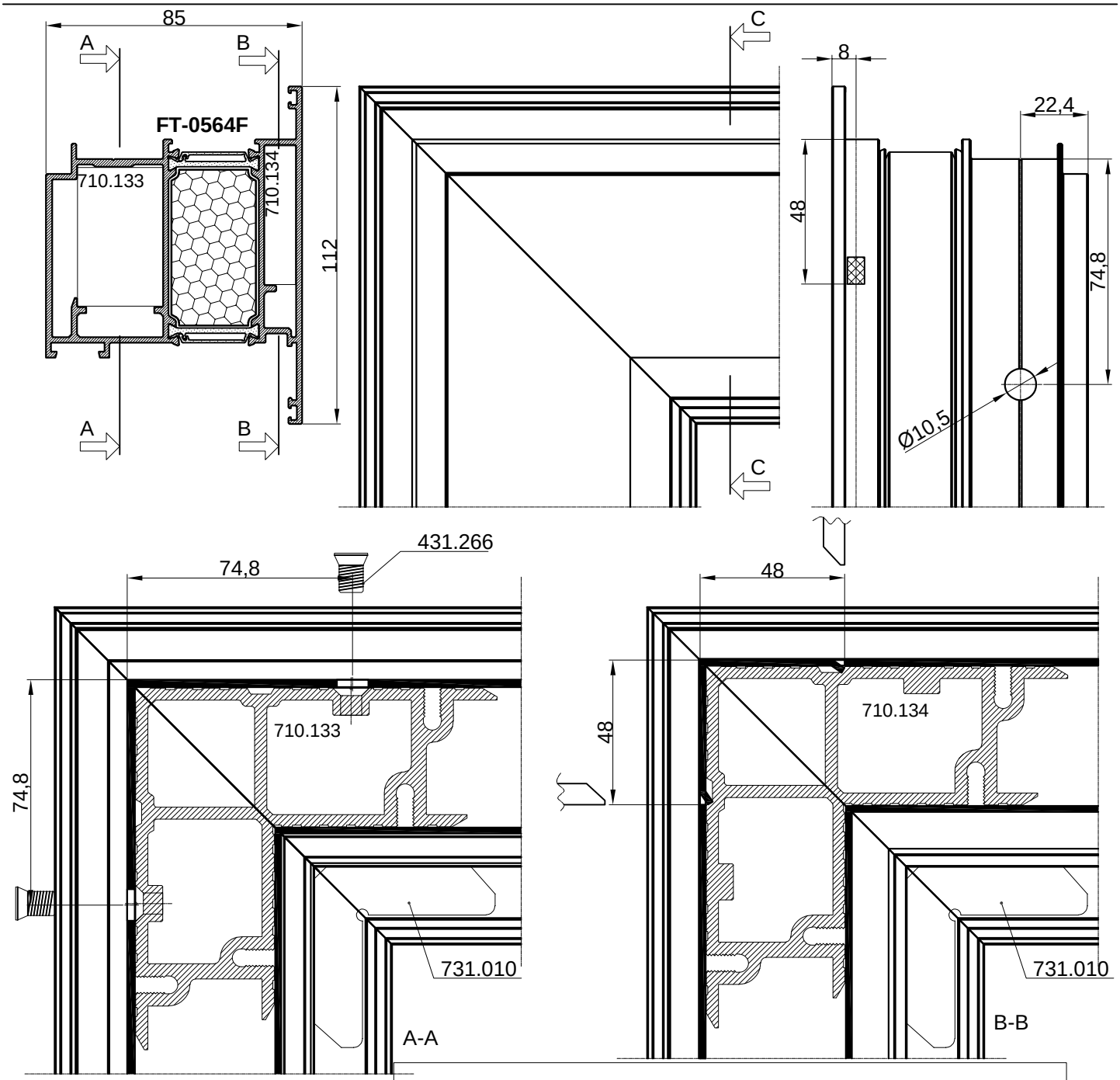

74,6
431.266
710.136
74,6
731.010
A-A

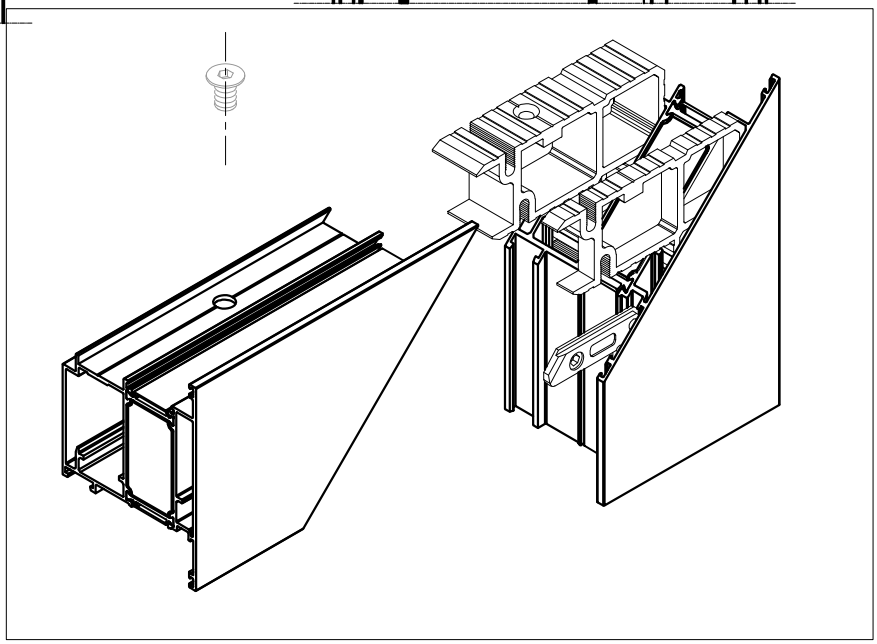

48
48
710.169
731.010
B-B

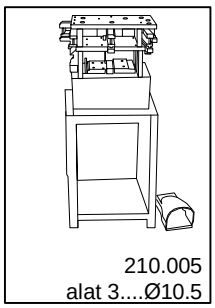

210.005
alat 3....Ø10.5

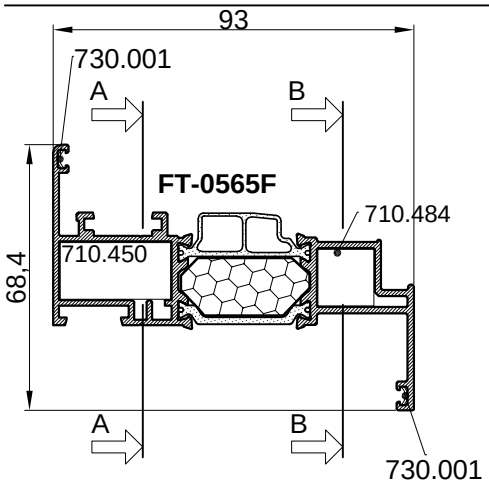


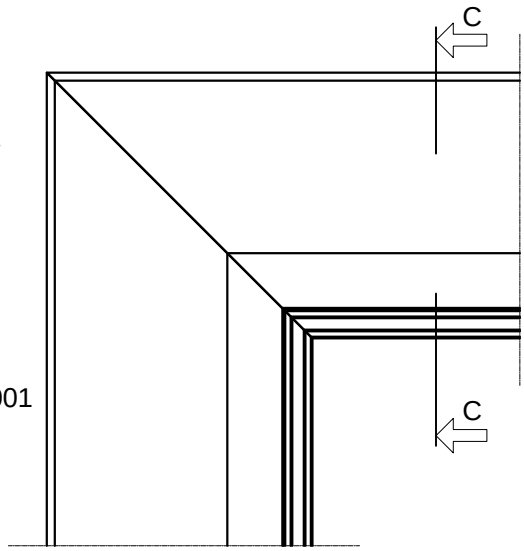

85
A
B
FT-0564F
710.134
112
710.062
A
B
C
C
8
22,4
48
48,7
48,7
48,7
710.062
731.010
A-A
48
48
710.134
731.010
B-B

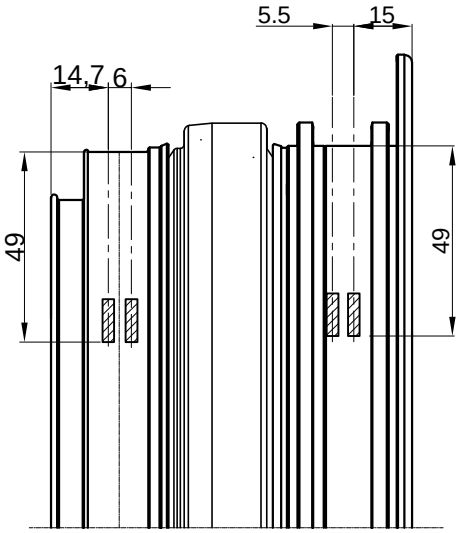

85
A
B
FT-0564F
710.133
710.134
112
C
8
22,4
48
74,8
Ø10,5
431.266
74,8
710.133
731.010
A-A
48
710.134
731.010
B-B

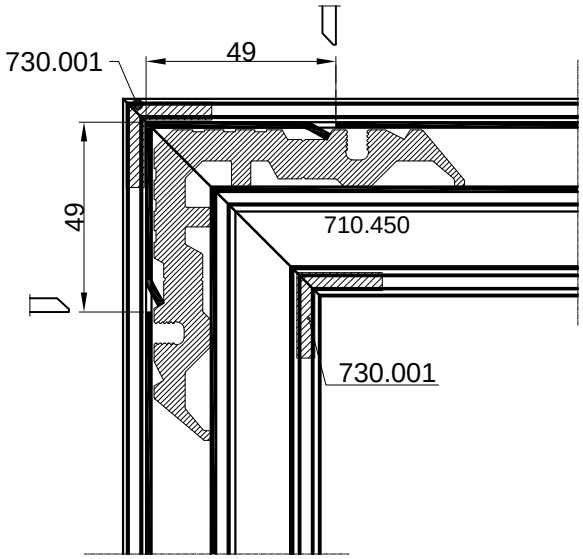



210.005
alat 3....Ø10.5

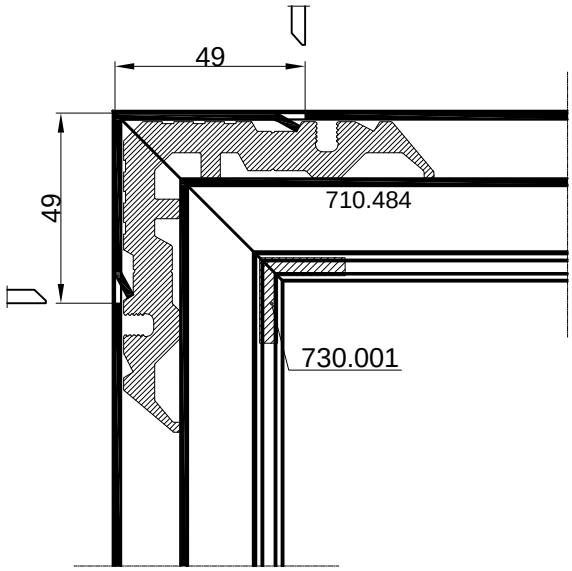

93
730.001
A
B
FT-0565F
710.484
710.450
68,4
A
B
730.001


C
C

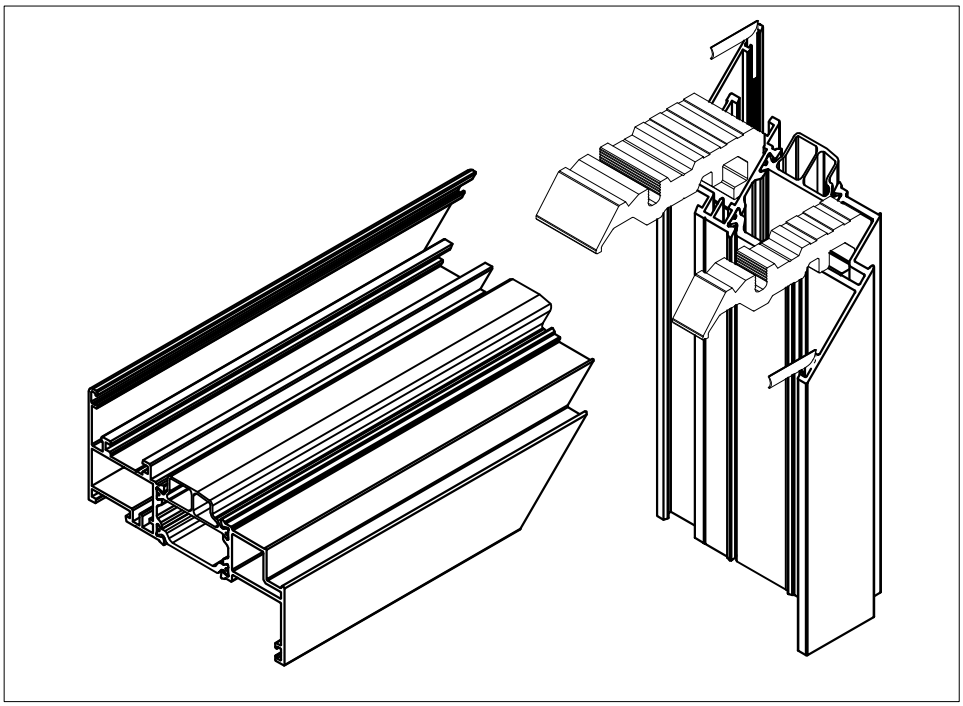

5.5
15
14,7
6
49
49

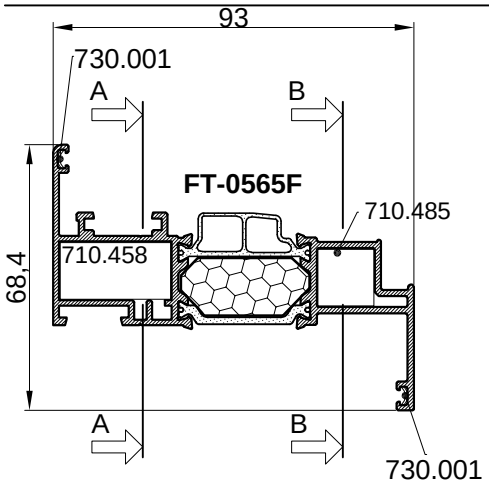

730.001
49
49
710.450
730.001

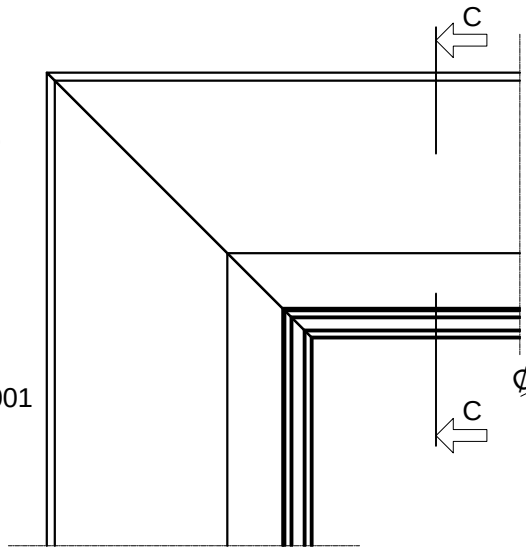
A-A

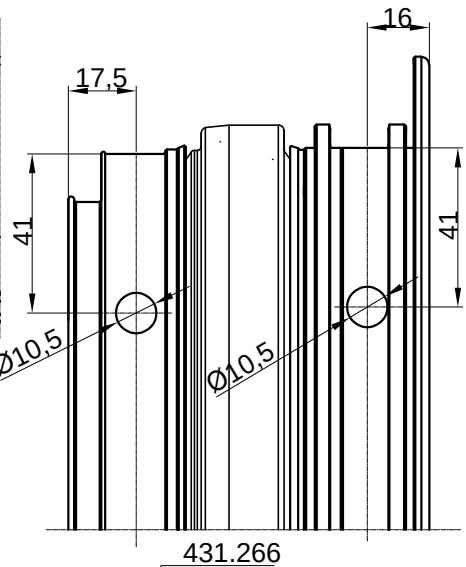

49
49
710.484
730.001

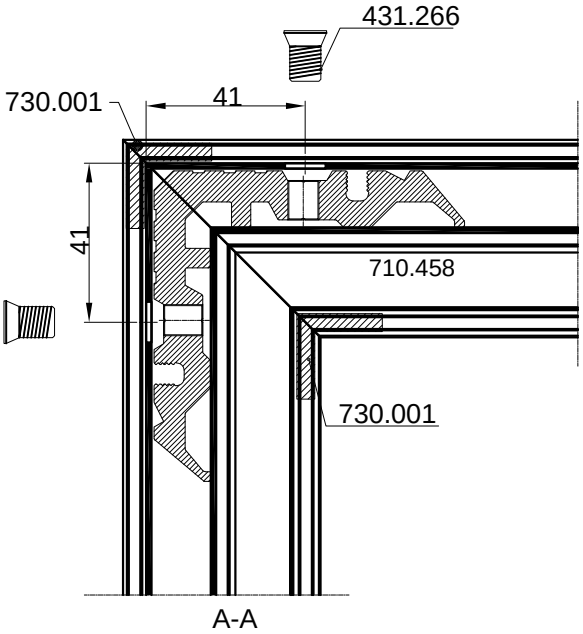
B-B



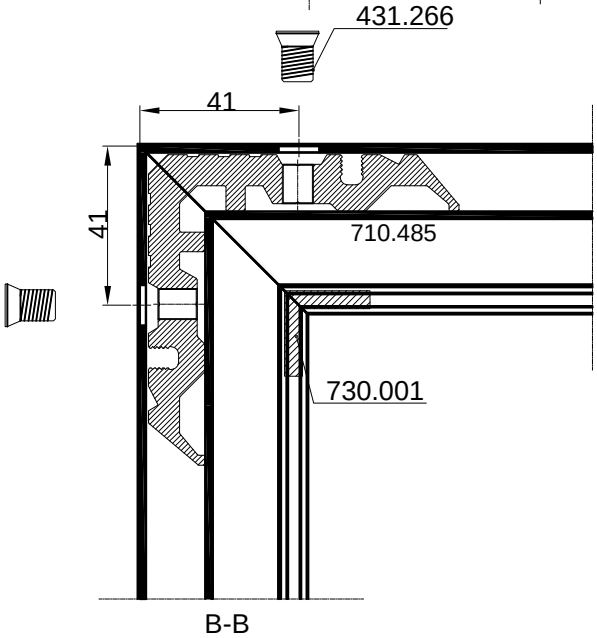

93
730.001
A
B
FT-0565F
710.485
710.458
68,4
A
B
730.001


C
C

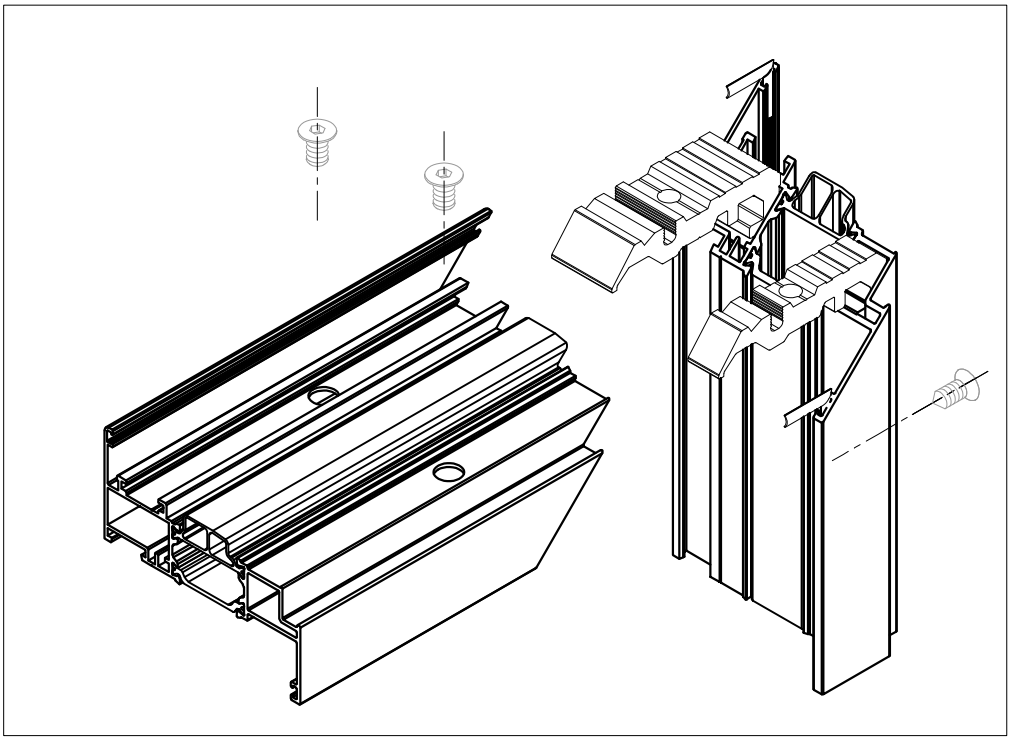

16
17,5
41
41
Ø10,5
Ø10,5

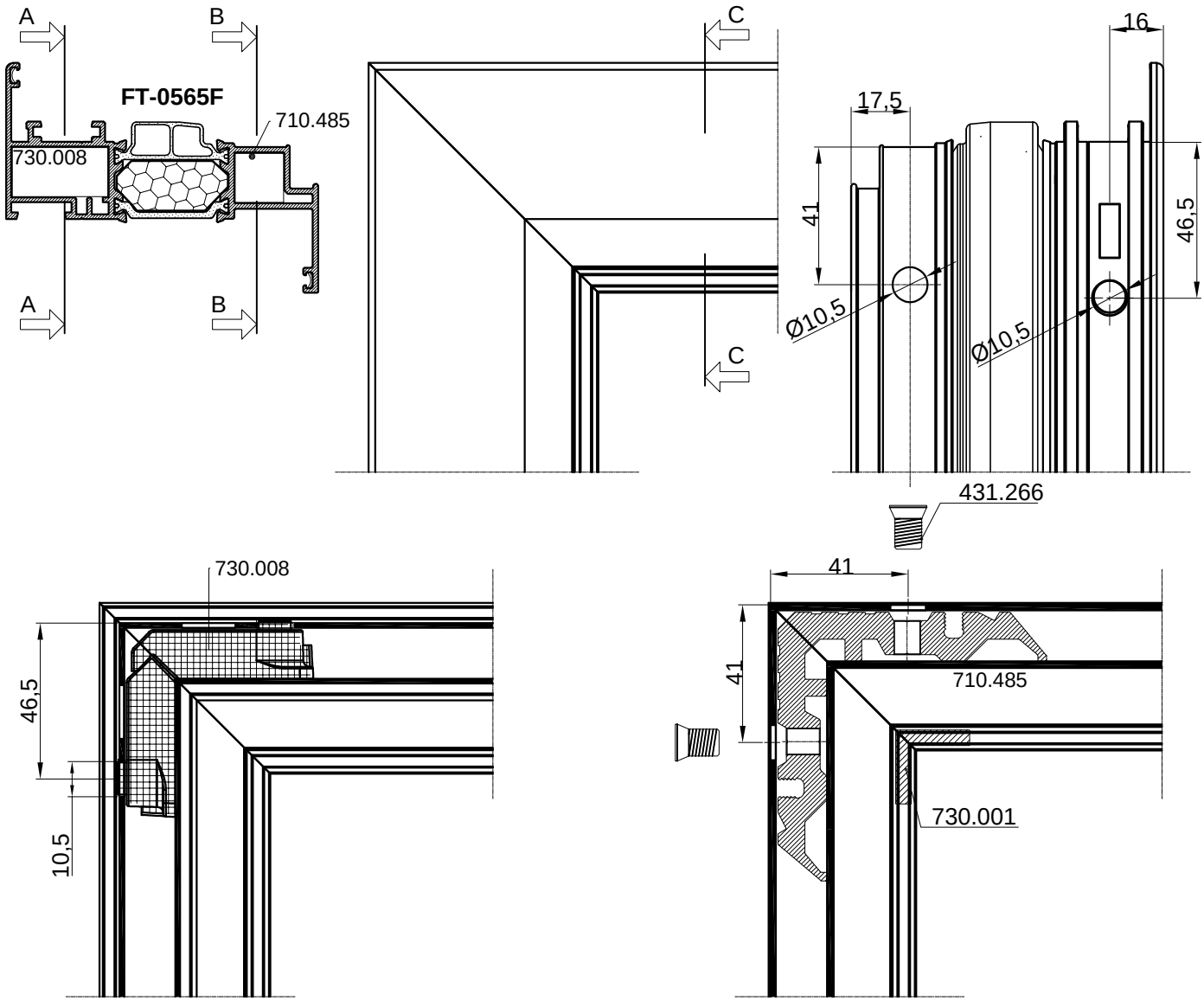

431.266
730.001
41
41
710.458
730.001

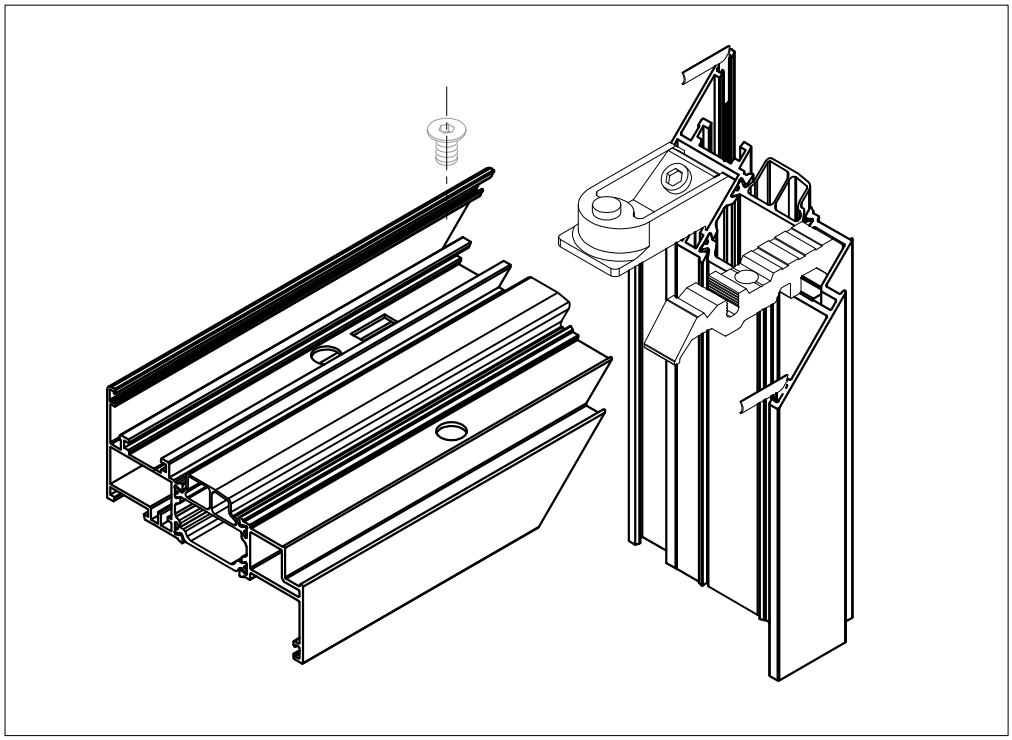
A-A

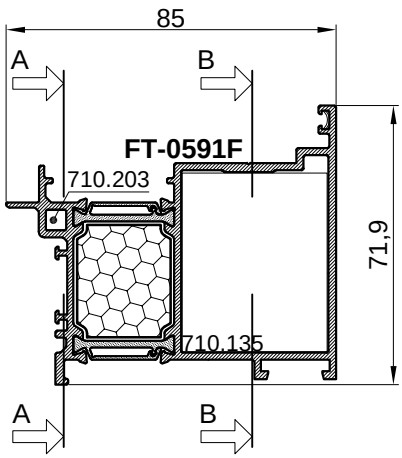

431.266
41
41
710.485
730.001

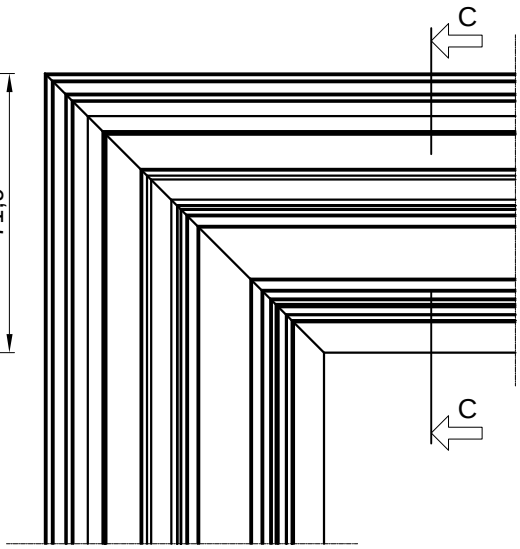
B-B

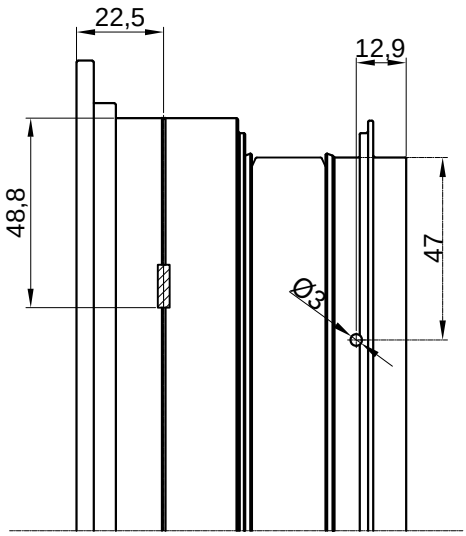


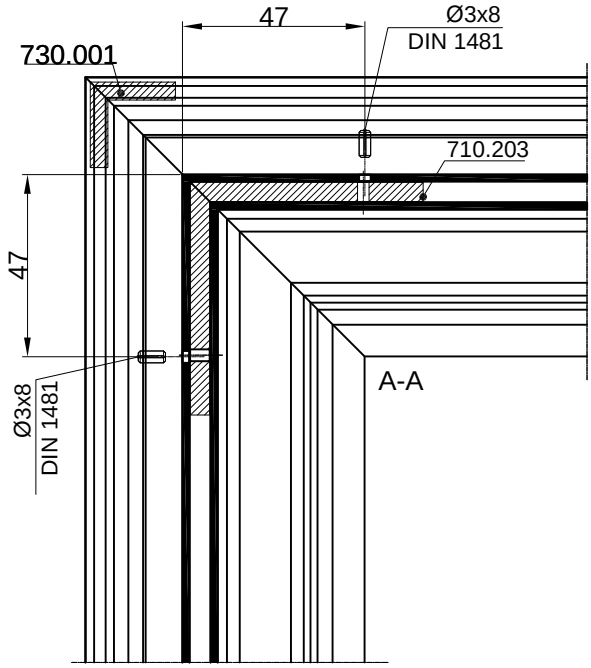

A
B
FT-0565F
710.485
730.008
A
B
C
C
16
17,5
41
46,5
Ø10,5
Ø10,5
431.266
730.008
46,5
10,5
41
41
710.485
730.001

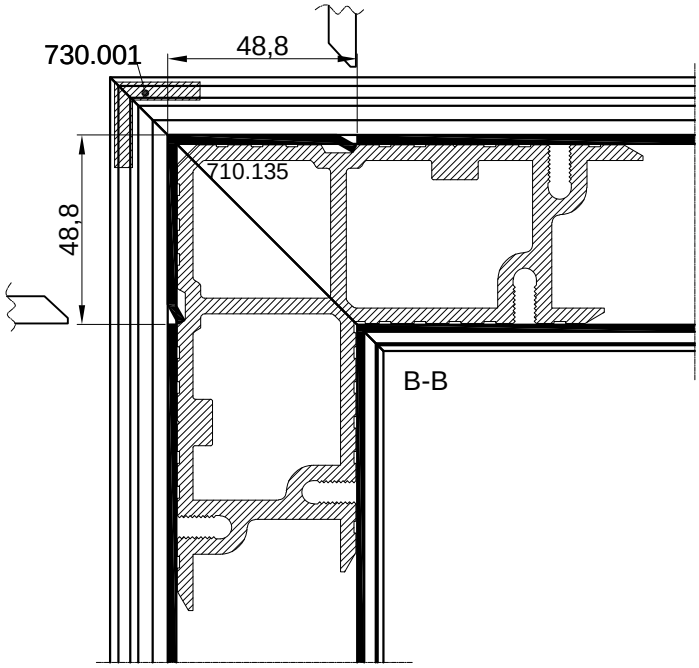


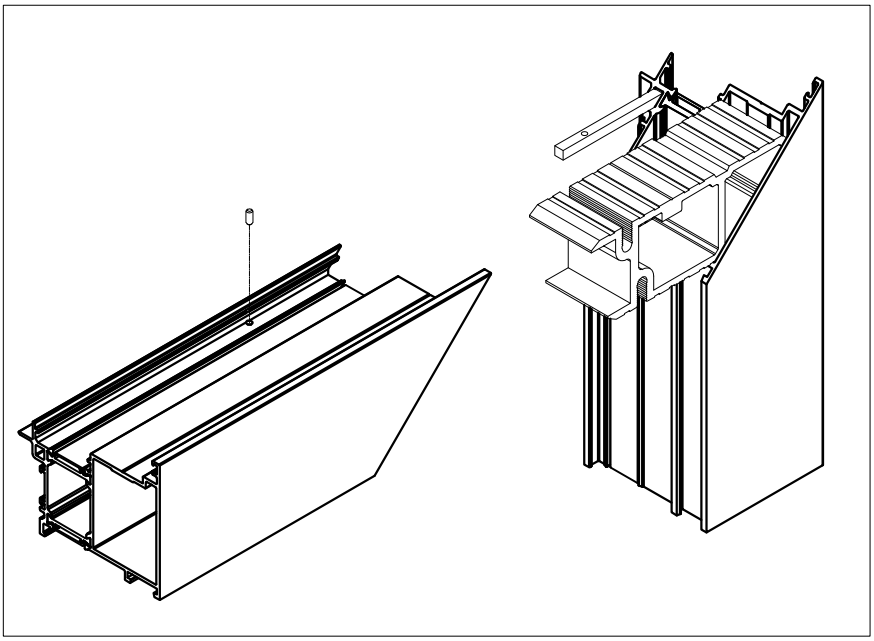

85
A
B
FT-0591F
710.203
710.135
71,9
A
B

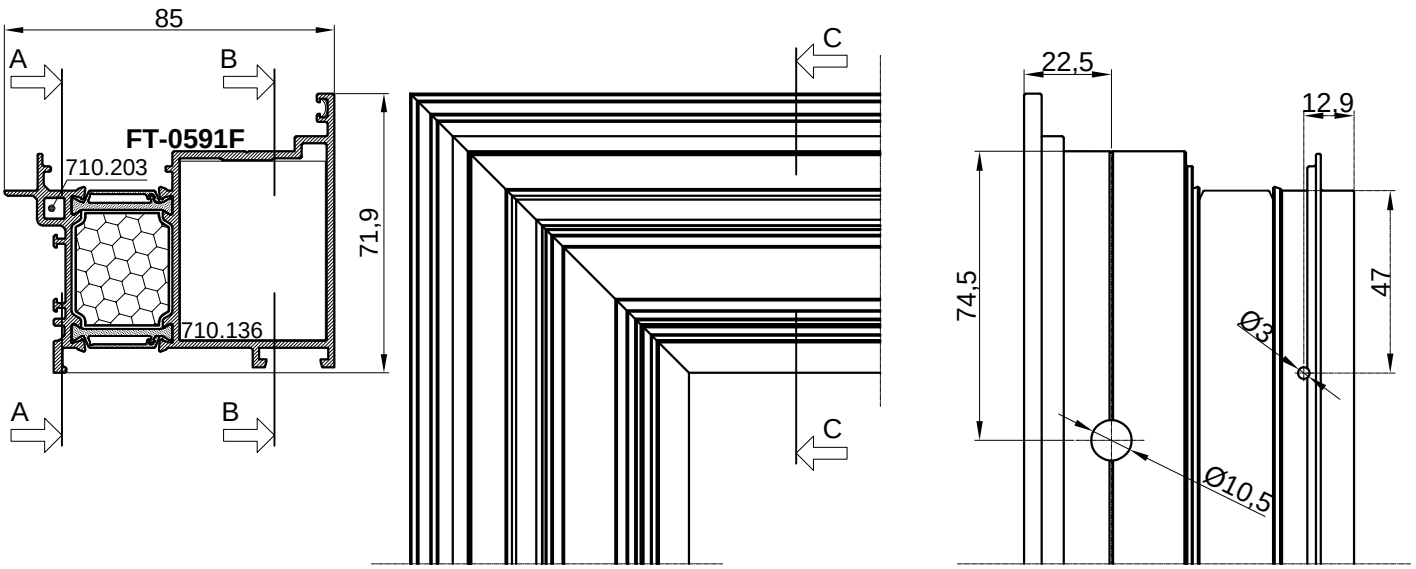

C
C

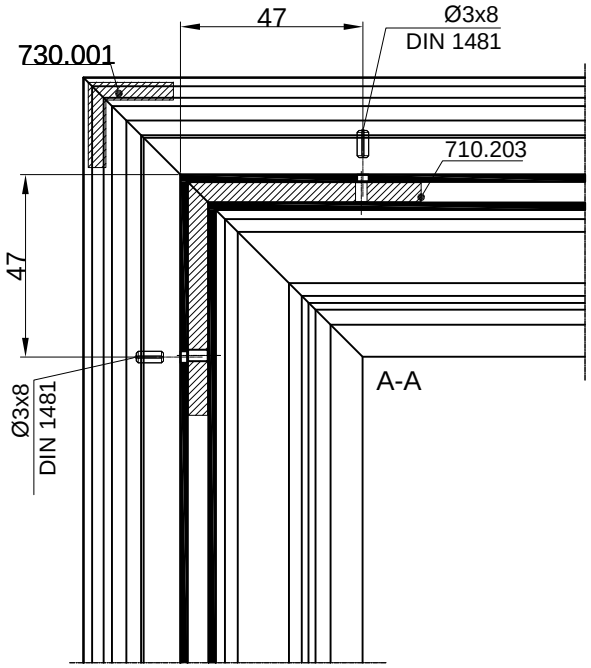

22,5
12,9
48,8
47
Ø3

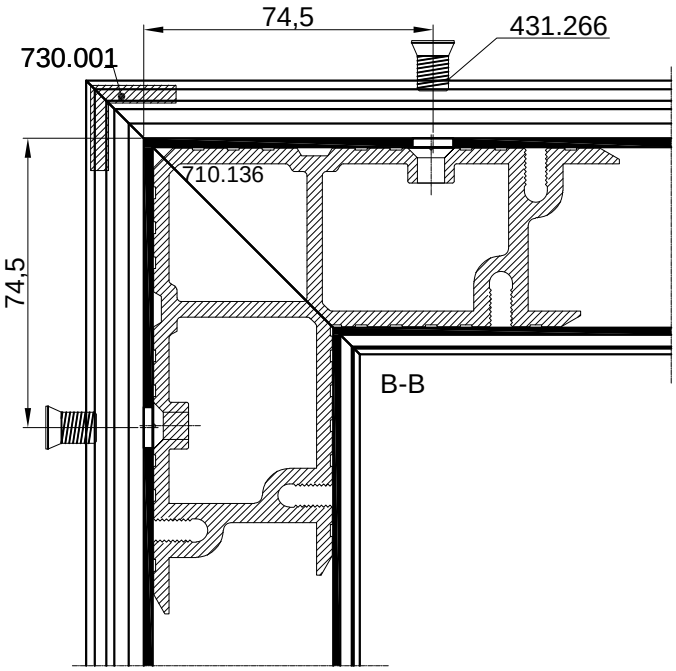

47
Ø3x8
DIN 1481
730.001
710.203
47
Ø3x8
DIN 1481
A-A

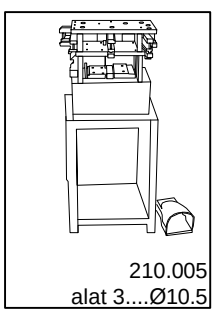

730.001
48,8
710.135
48,8
B-B

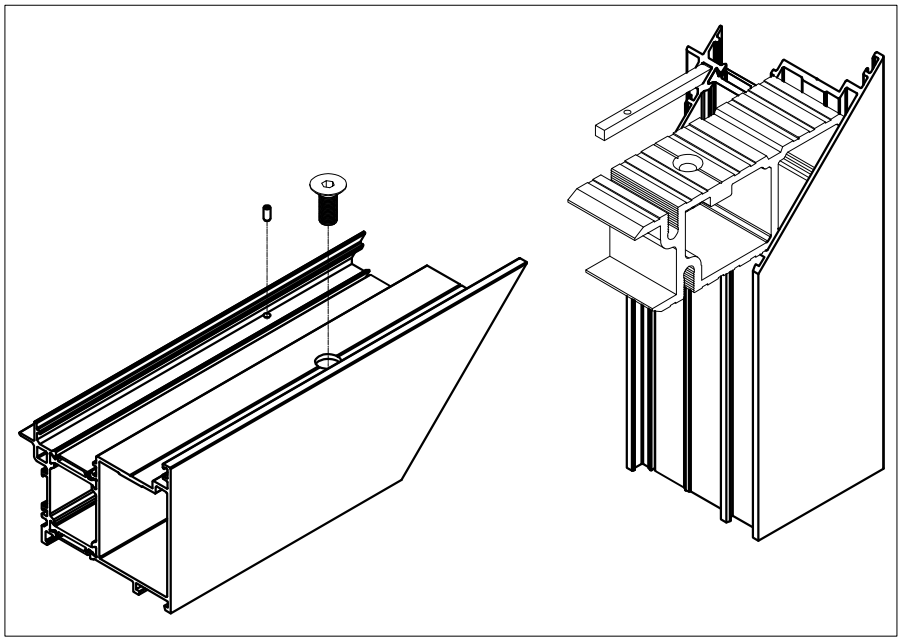


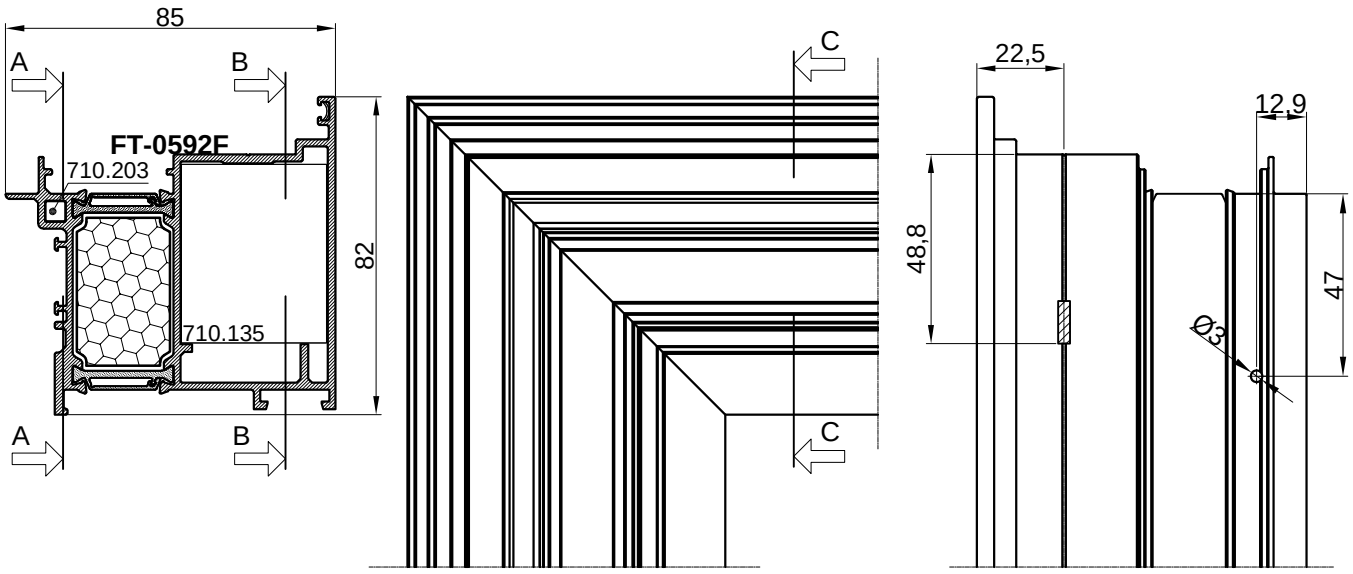

85
A
B
FT-0591F
710.203
71,9
710.136
A
B
C
C
22,5
12,9
74,5
47
Ø3
Ø10,5

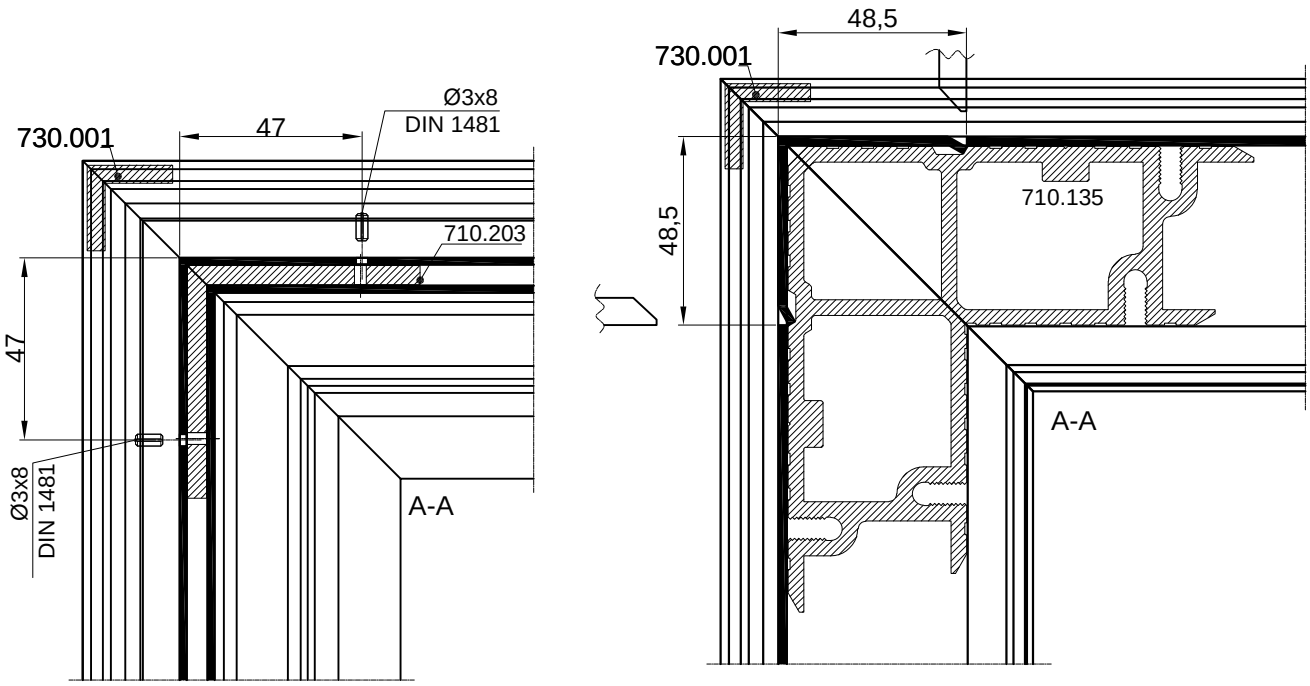

47
Ø3x8
DIN 1481
730.001
710.203
47
Ø3x8
DIN 1481
A-A

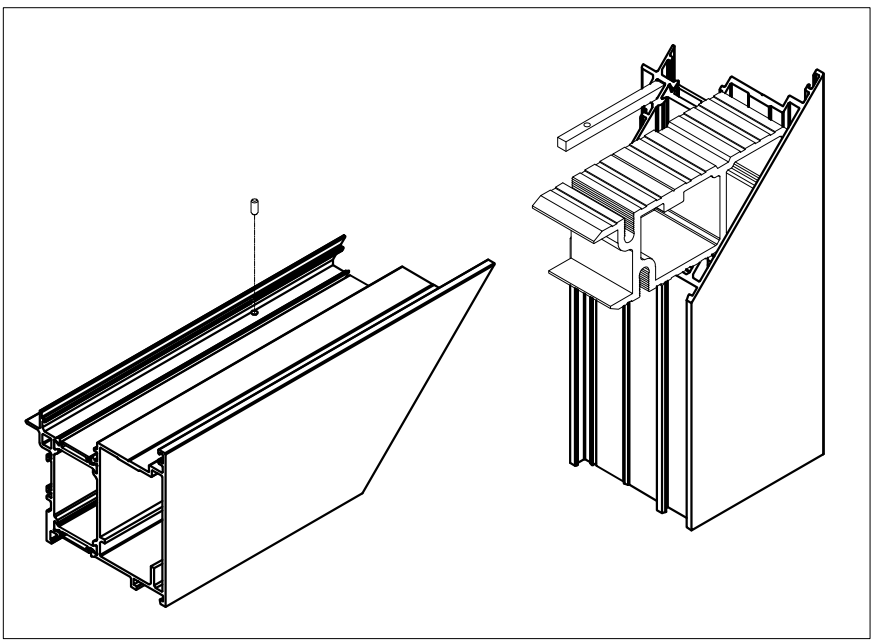

74,5
431.266
730.001
710.136
74,5
B-B

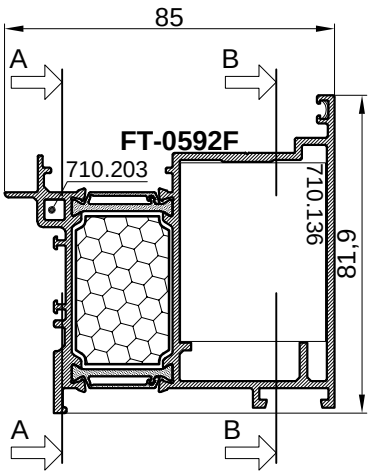

210.005
alat 3....Ø10.5

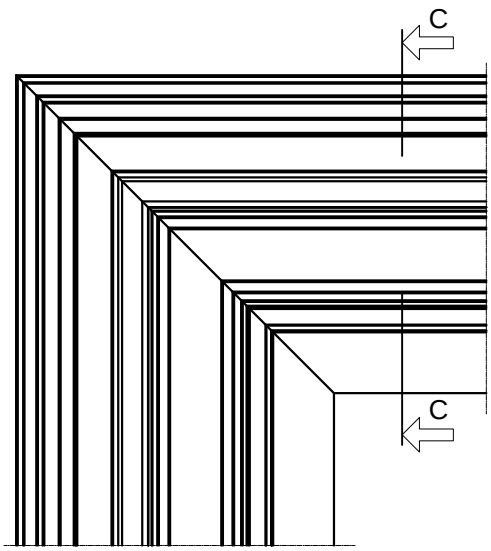


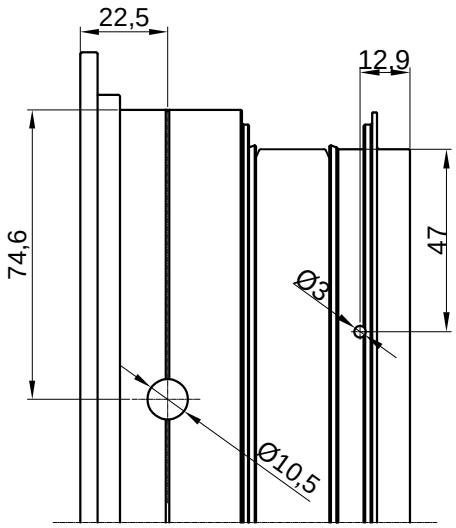

85
A
B
FT-0592F
710.203
710.135
82
C
22,5
12,9
48,8
47
Ø3

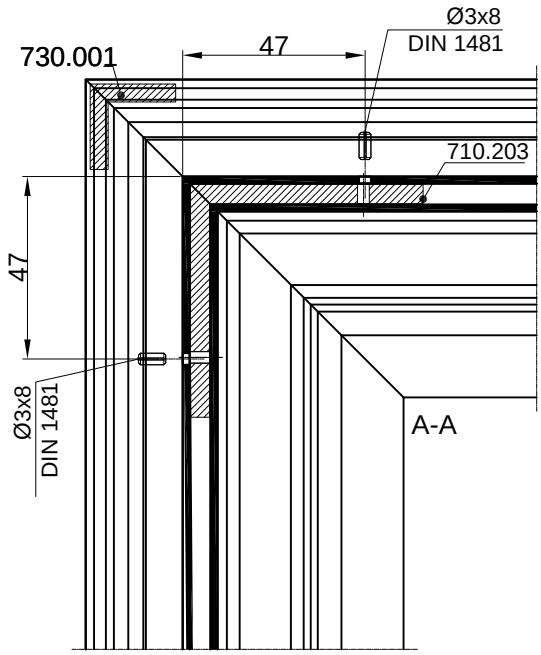

730.001
47
Ø3x8
DIN 1481
710.203
47
Ø3x8
DIN 1481
A-A
48,5
730.001
48,5
710.135
A-A

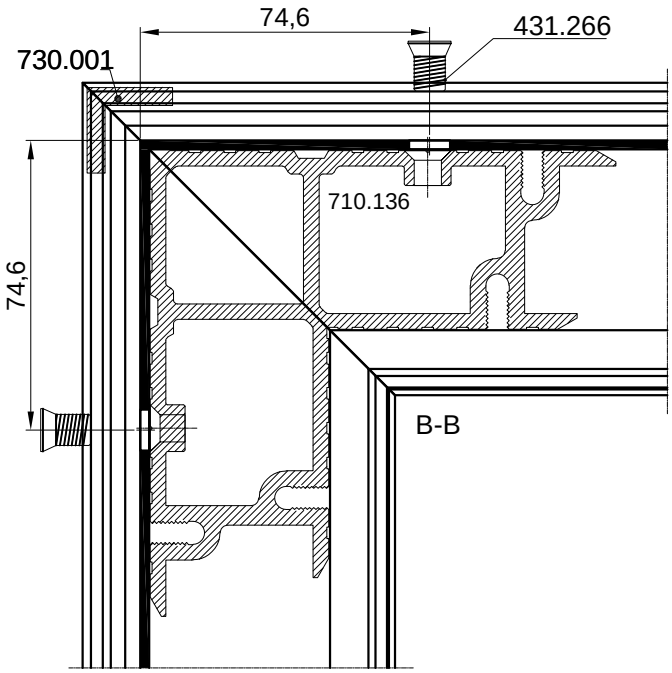


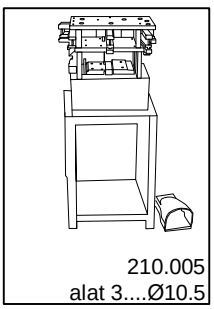

85
A
B
FT-0592F
710.203
710.136
81,9
A
B

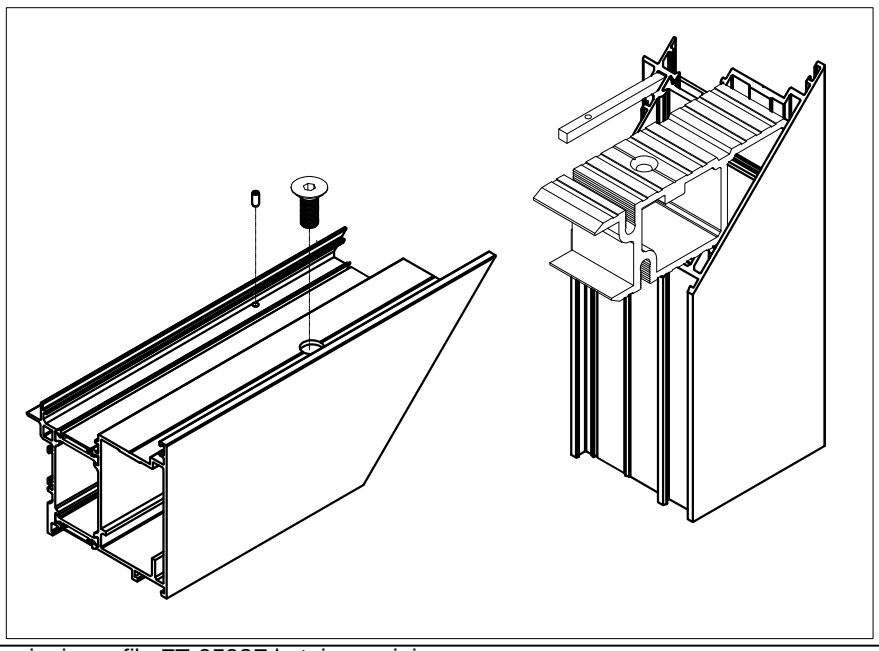

C
C

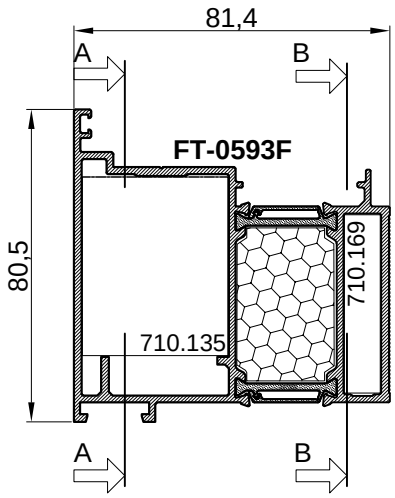

22,5
12,9
74,6
47
Ø3
Ø10,5

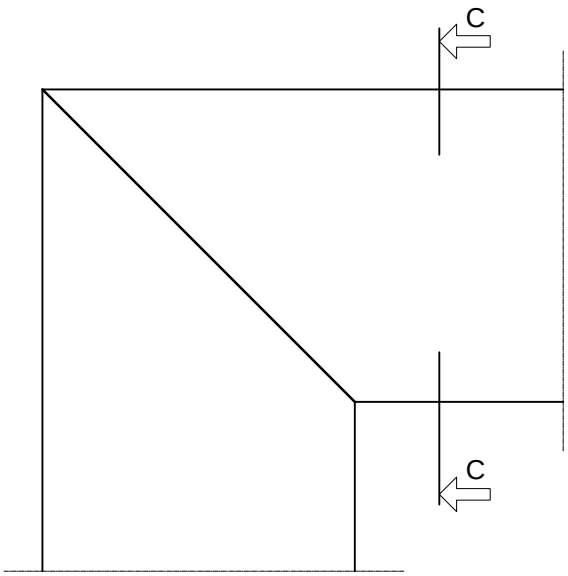

730.001
47
Ø3x8
DIN 1481
710.203
47
Ø3x8
DIN 1481
A-A

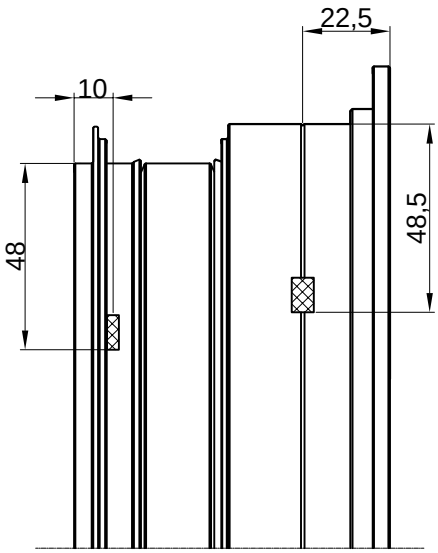

74,6
431.266
730.001
710.136
74,6
B-B

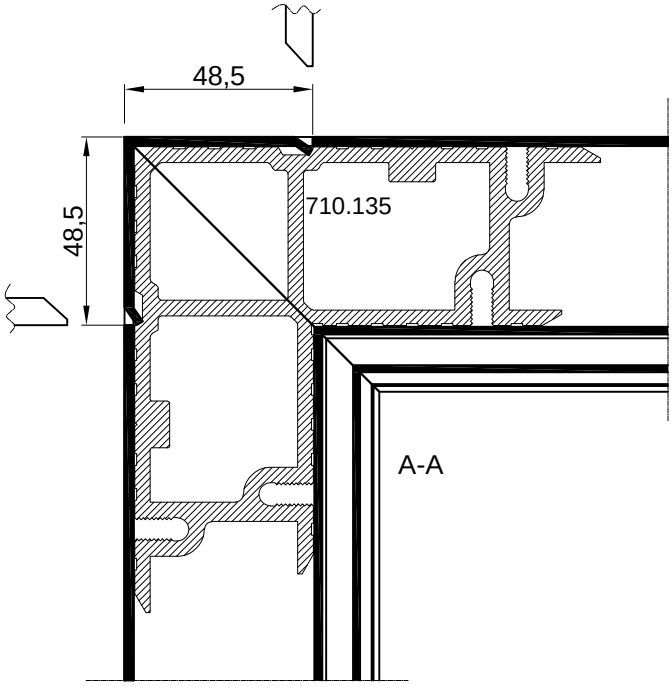

210.005
alat 3....Ø10.5

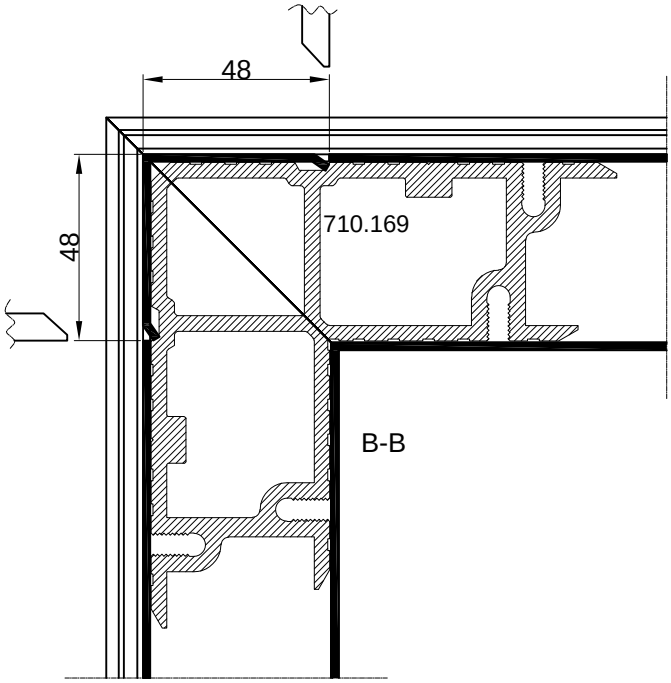


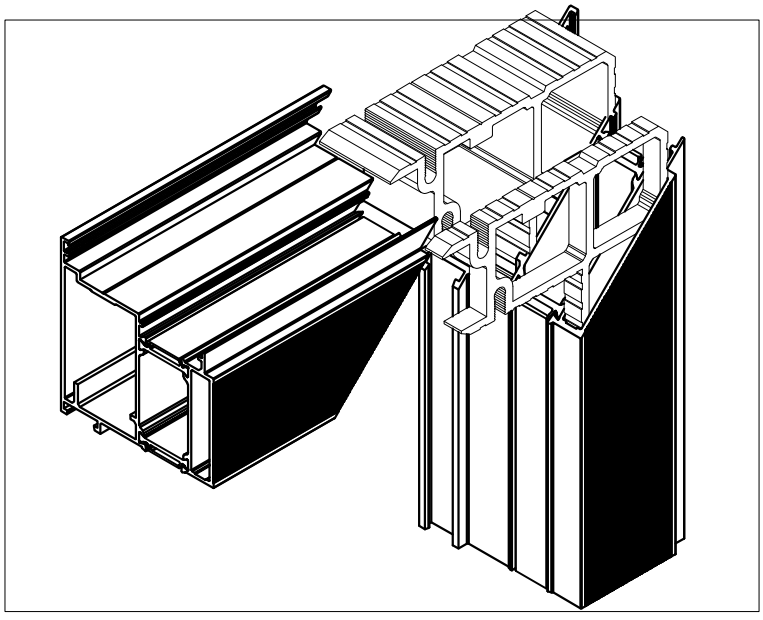

81,4
A
B
FT-0593F
80,5
710.169
710.135
A
B

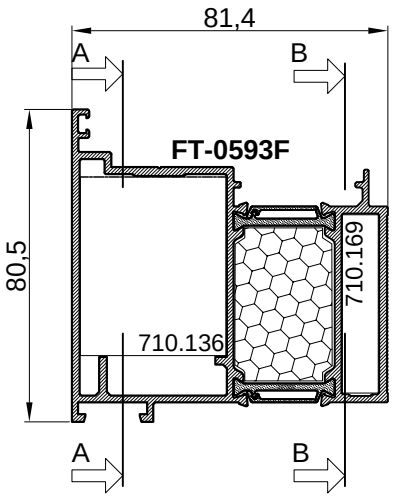

C
C

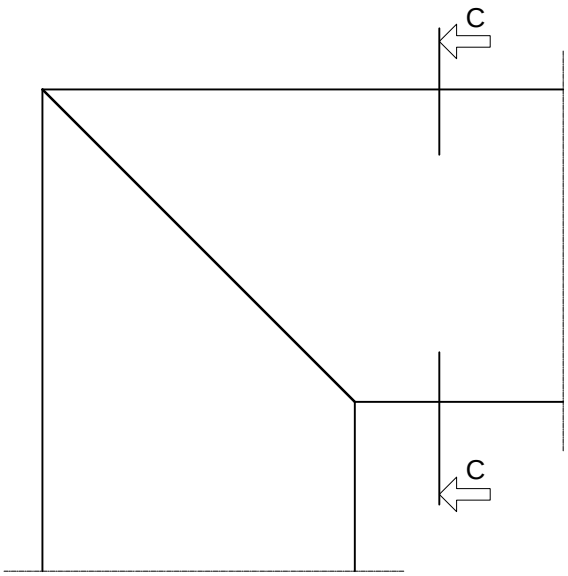

22,5
10
48
48,5

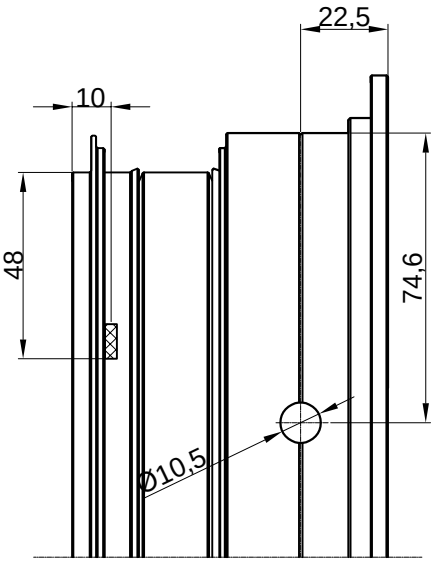

48,5
48,5
710.135
A-A

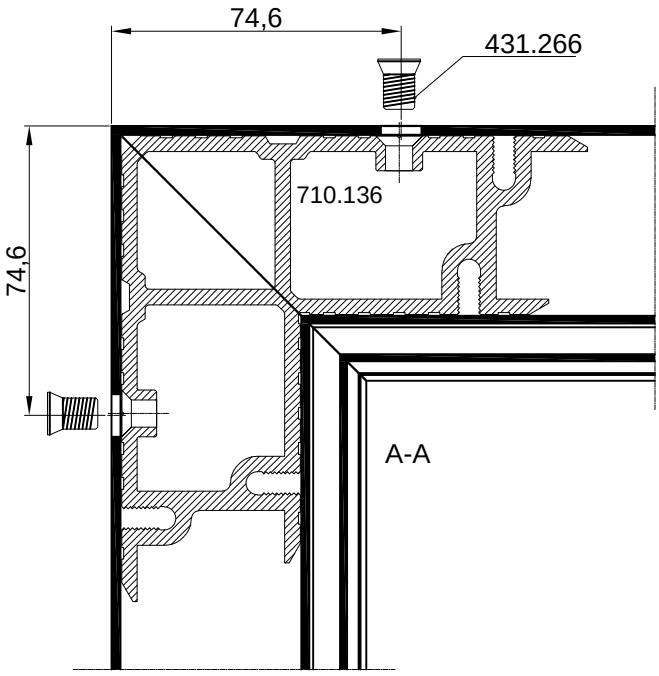

48
48
710.169
B-B

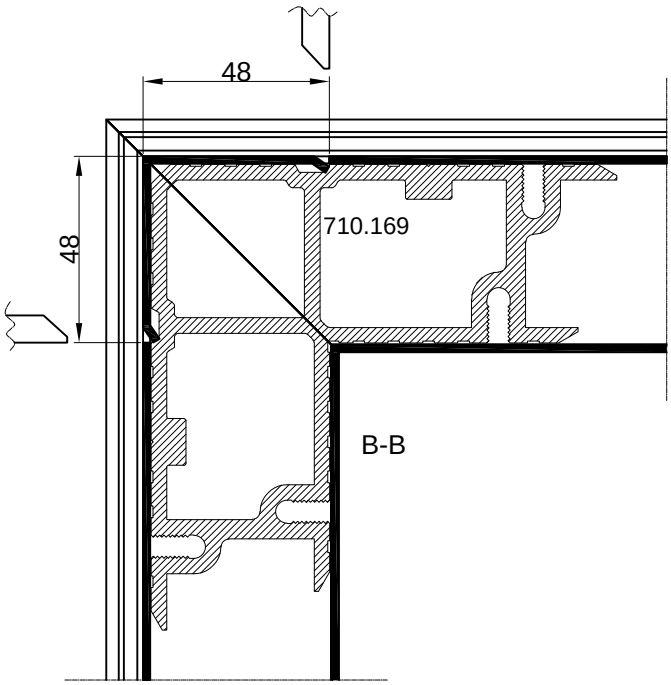


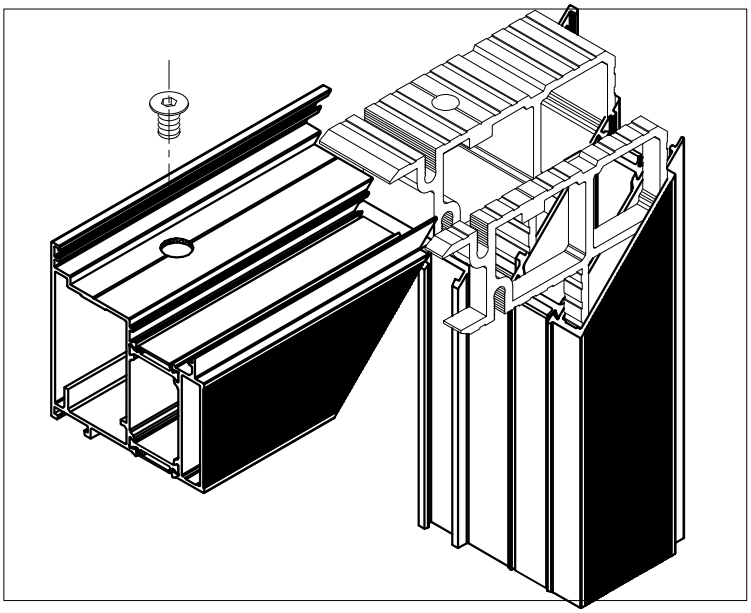

81,4
A
B
FT-0593F
80,5
710.169
710.136
A
B

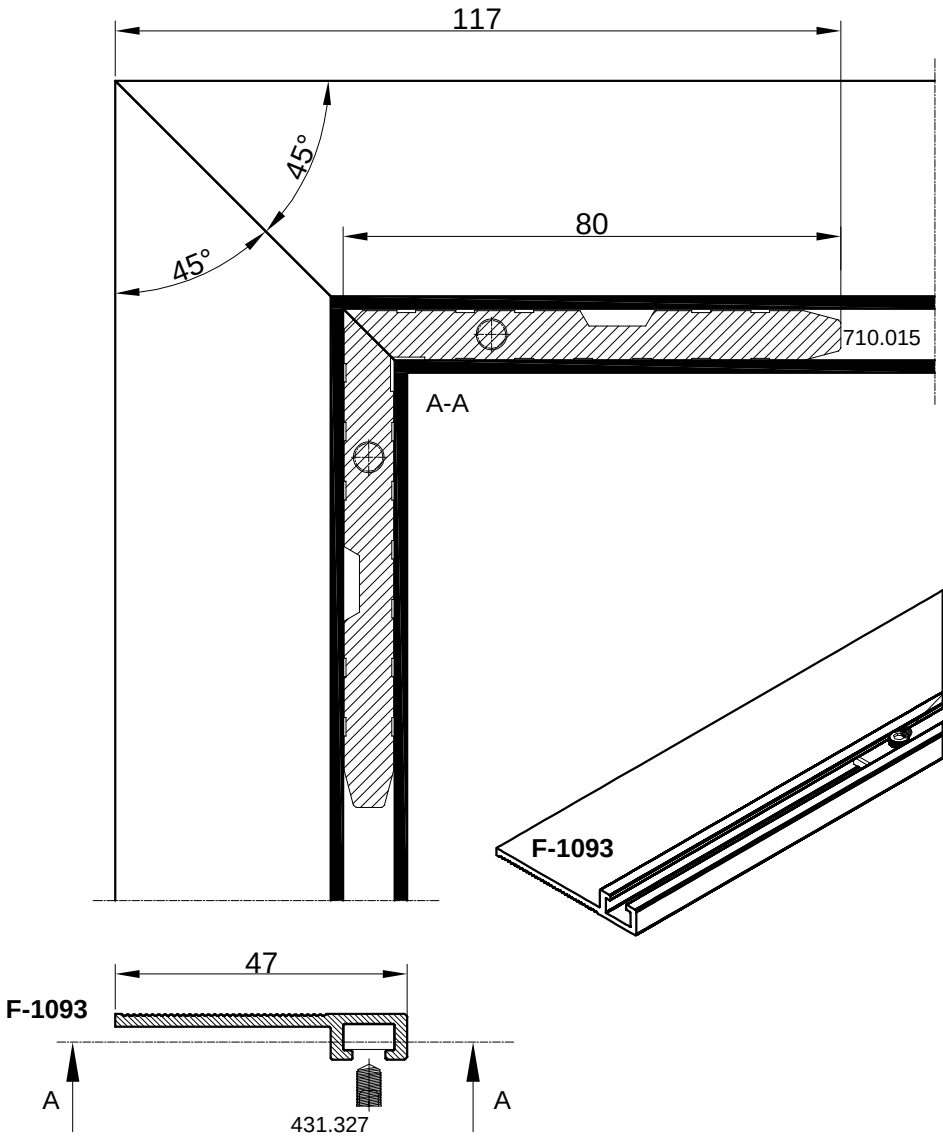

C
C

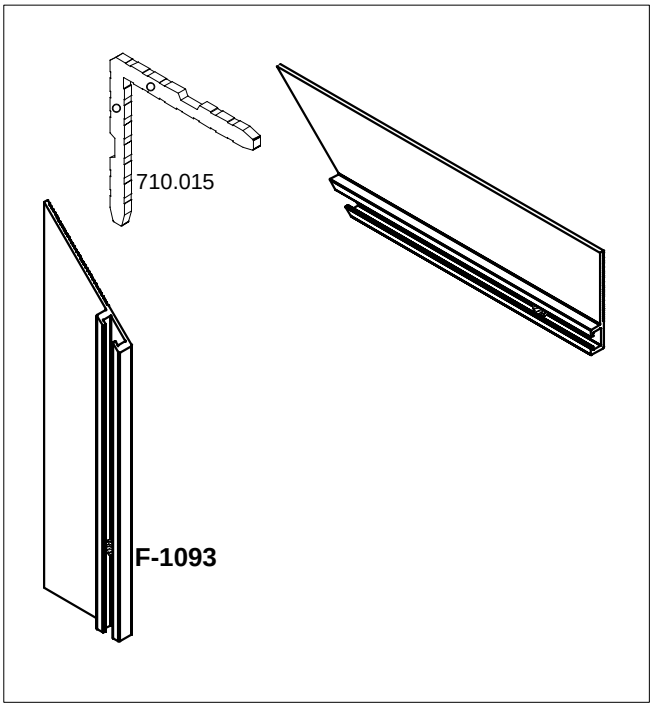

22,5
10
48
74,6
Ø10,5

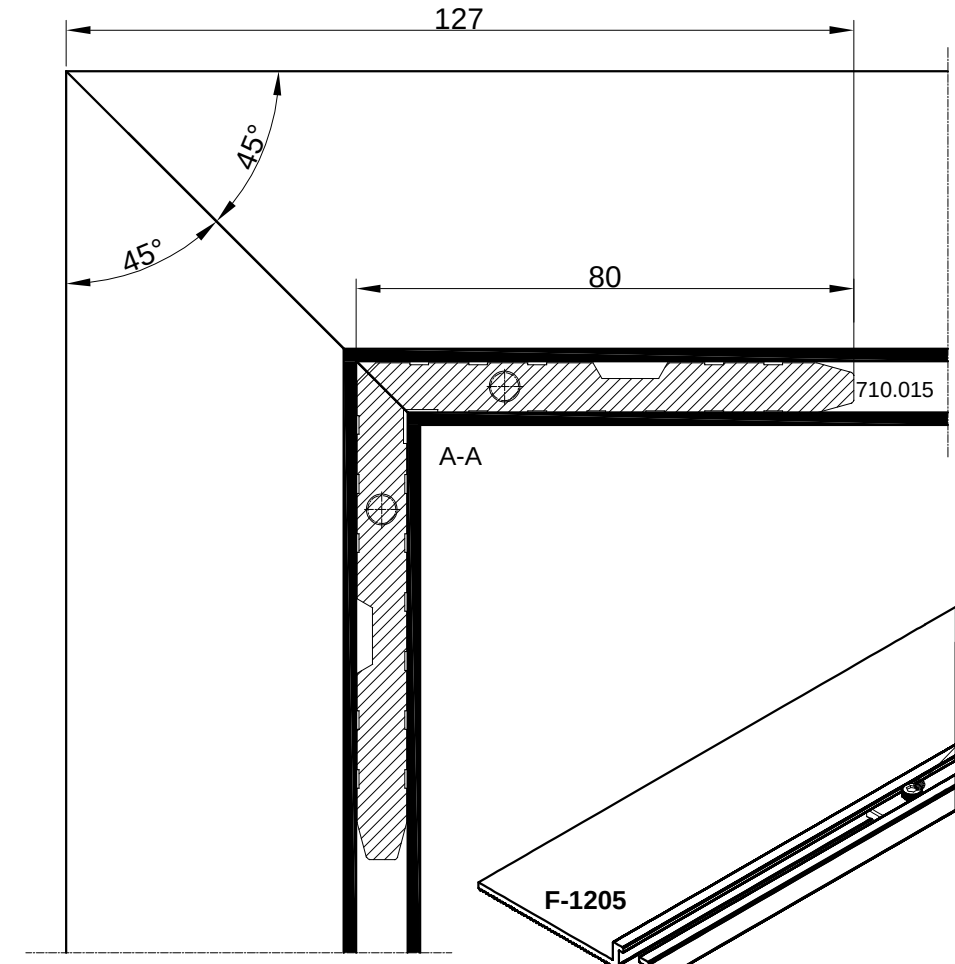

74,6
431.266
710.136
74,6
A-A

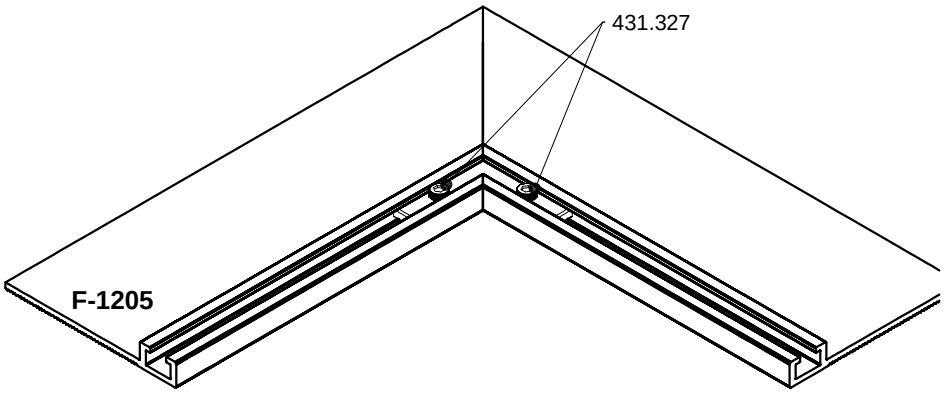

48
710.169
48
B-B

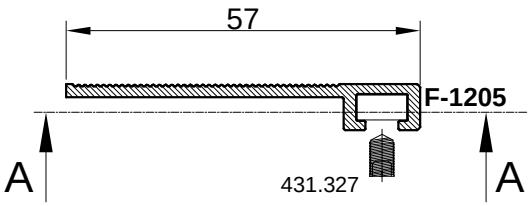


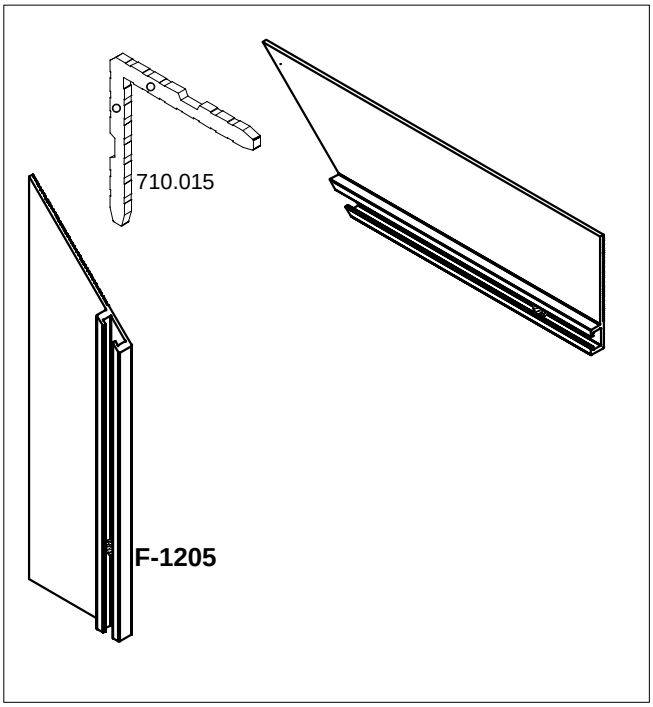

117
45°
45°
80
710.015
A-A
431.327
F-1093
47
F-1093
A
A
431.327

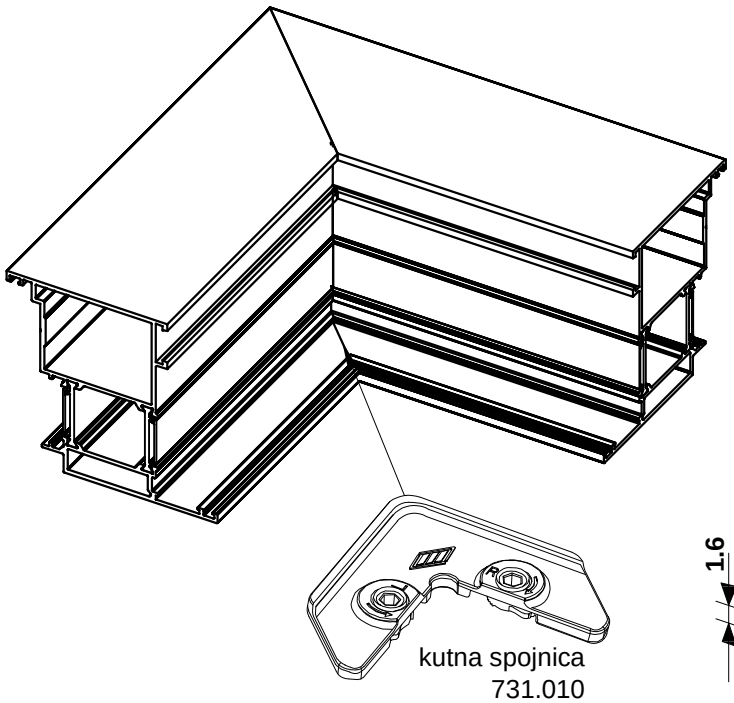

710.015
F-1093


127
45°
45°
80
710.015
A-A

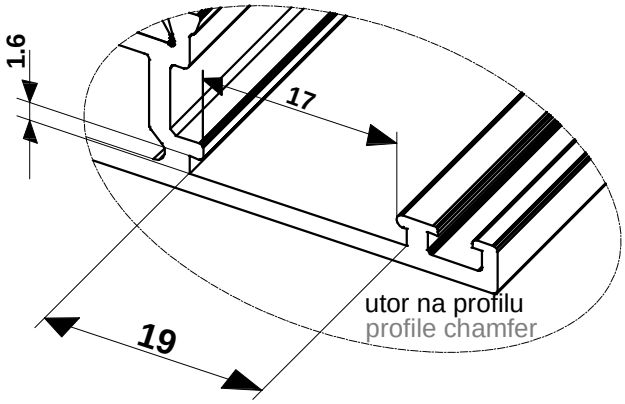

431.327
F-1205


57
F-1205
A
A
431.327

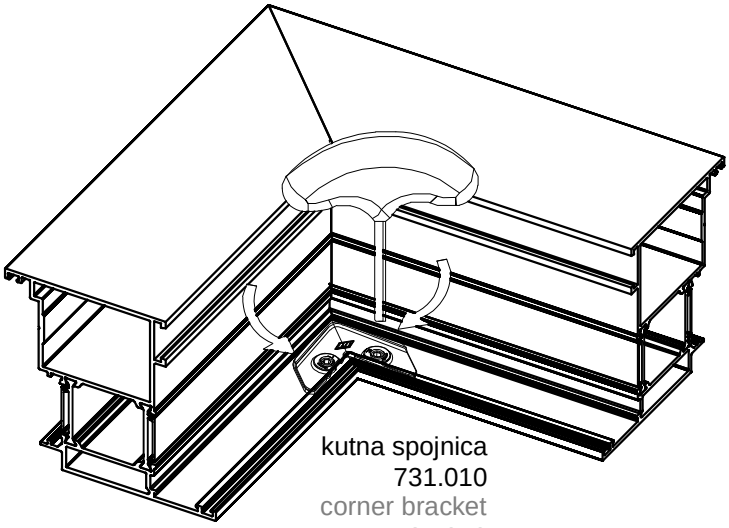

710.015
F-1205



kutna spojnica
731.010
corner bracket
731.010

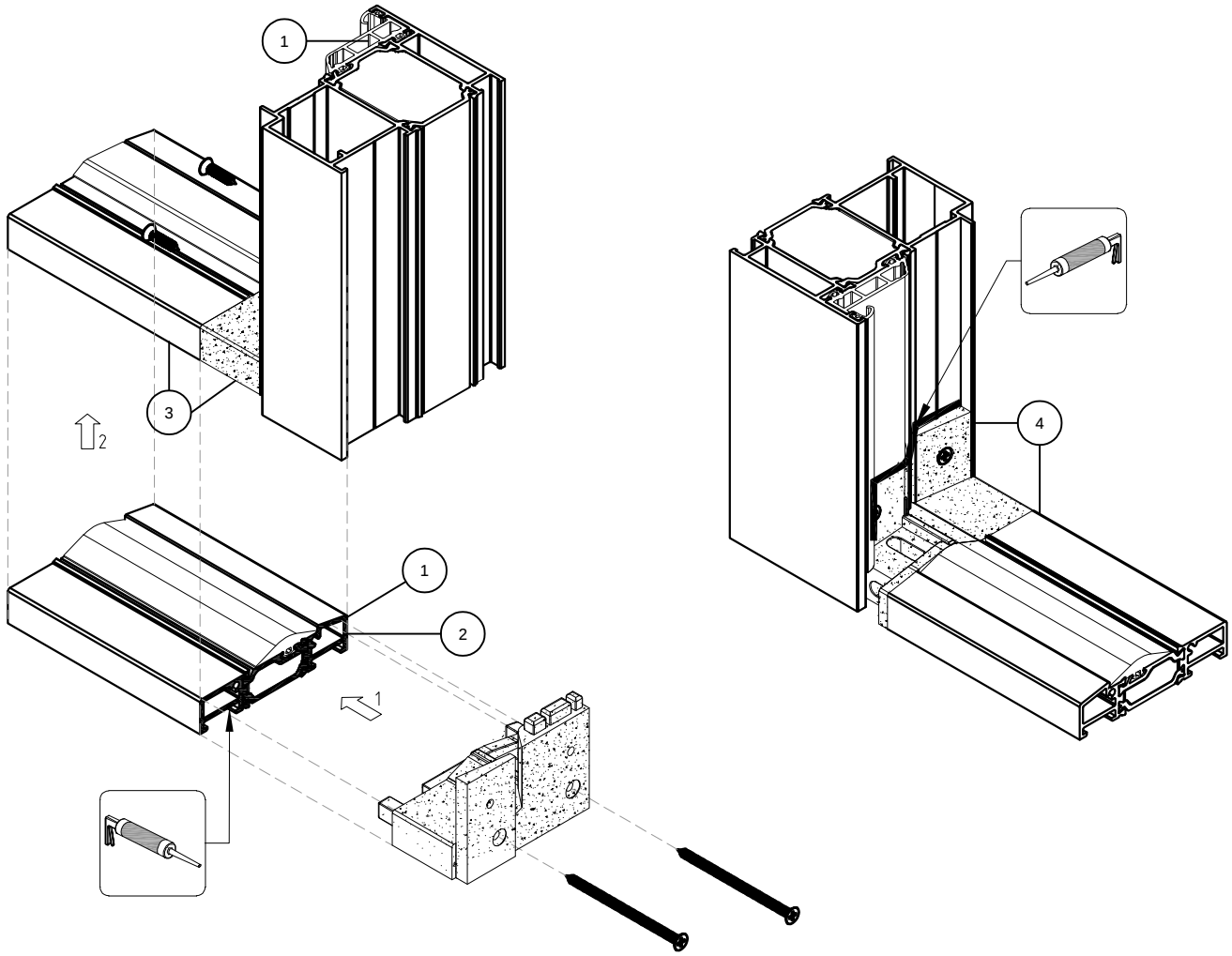


utor na profilu
profile chamfer



kutna spojnica
731.010
corner bracket
731.010

SPAJANJE PROFILA PRAGA S PROFILOM RAMA POMOĆU UMETKA
CONNECTING THE THRESHOLD PROFILE WITH FRAME PROFILE USING END INSERT



POSTUPAK SPAJANJA PROFILA :

1. Sve površine koje se spajaju-rezove očistiti i odmastiti odgovarajućim sredstvom /npr. "Henkel" - *Teroson VR 20 ili Teroson FL+* /.
2. Na profilu praga premazati sve površine koje se spajaju ljepilom za metal /npr. "Henkel" - *Teroson MS 939* /.

2.1. Ljepilo za metal ubrizgati u komore profila praga na mjestima gdje ulazi umetak (po opsegu komore)

3. Profil praga i umetak izravnati i spojiti.
4. Profil praga sa spojenim umetkom izravnati i spojiti sa profilom rama.
5. **Nakon spajanja profila, sve spojeve profila i umetka ispuniti ljepilom za metal** /npr. "Henkel" - *Teroson MS 939* /.
6. Dio ljepila koji iscuri između rezova očistiti sredstvom za čišćenje i odmašćivanje /npr. "Henkel" - *Teroson VR 20 ili Teroson FL+* /.

NAPOMENA:

Lijepljenjem rezova, kao i svih spojeva profila sa ljepilima za metal, osigurava se potrebna zrako i vodonepropusnosti spoja kao i dodatna mehanička čvrstoća spoja.

PROFILE CONNECTION PROCEDURE:

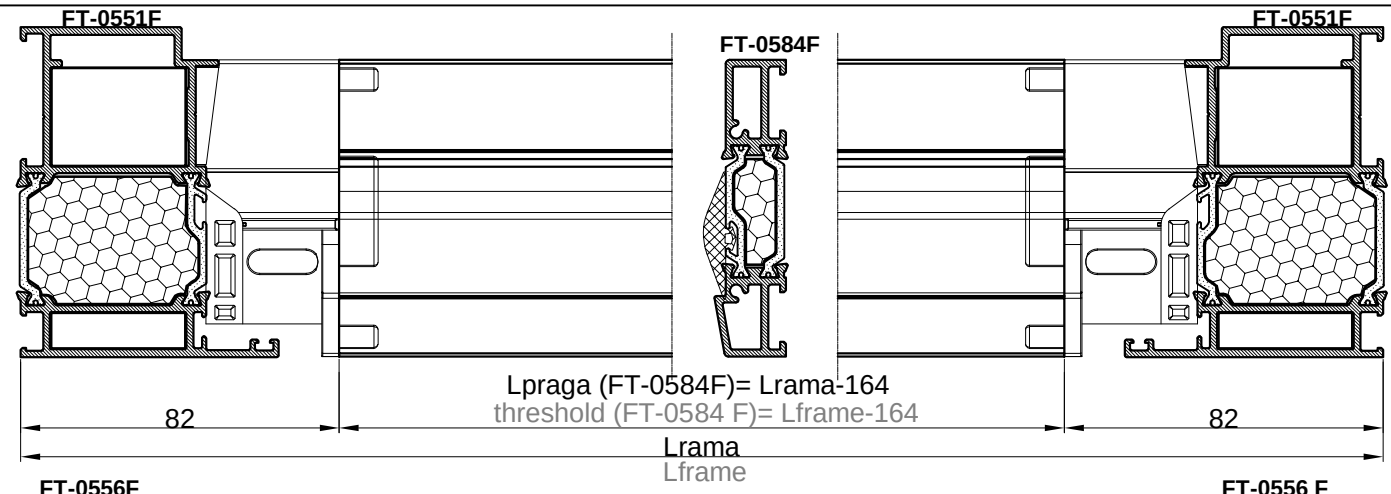
1. Clean and degrease all connecting surfaces with suitable products /e.g. "Henkel" - *Teroson VR 20 ili Teroson FL+* /.
2. On threshold profile smear all connecting surfaces with metal glue /e.g. "Henkel" - *Teroson MS 939* /.

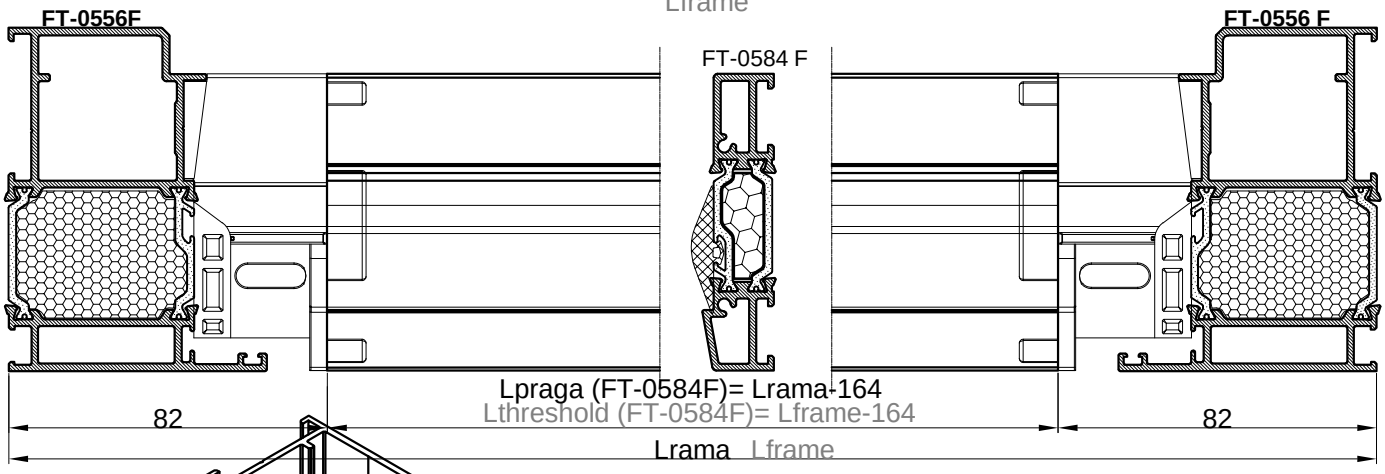
2.1. Inject metal glue into chambers on ends of the profile for the insert (on chamber edges).

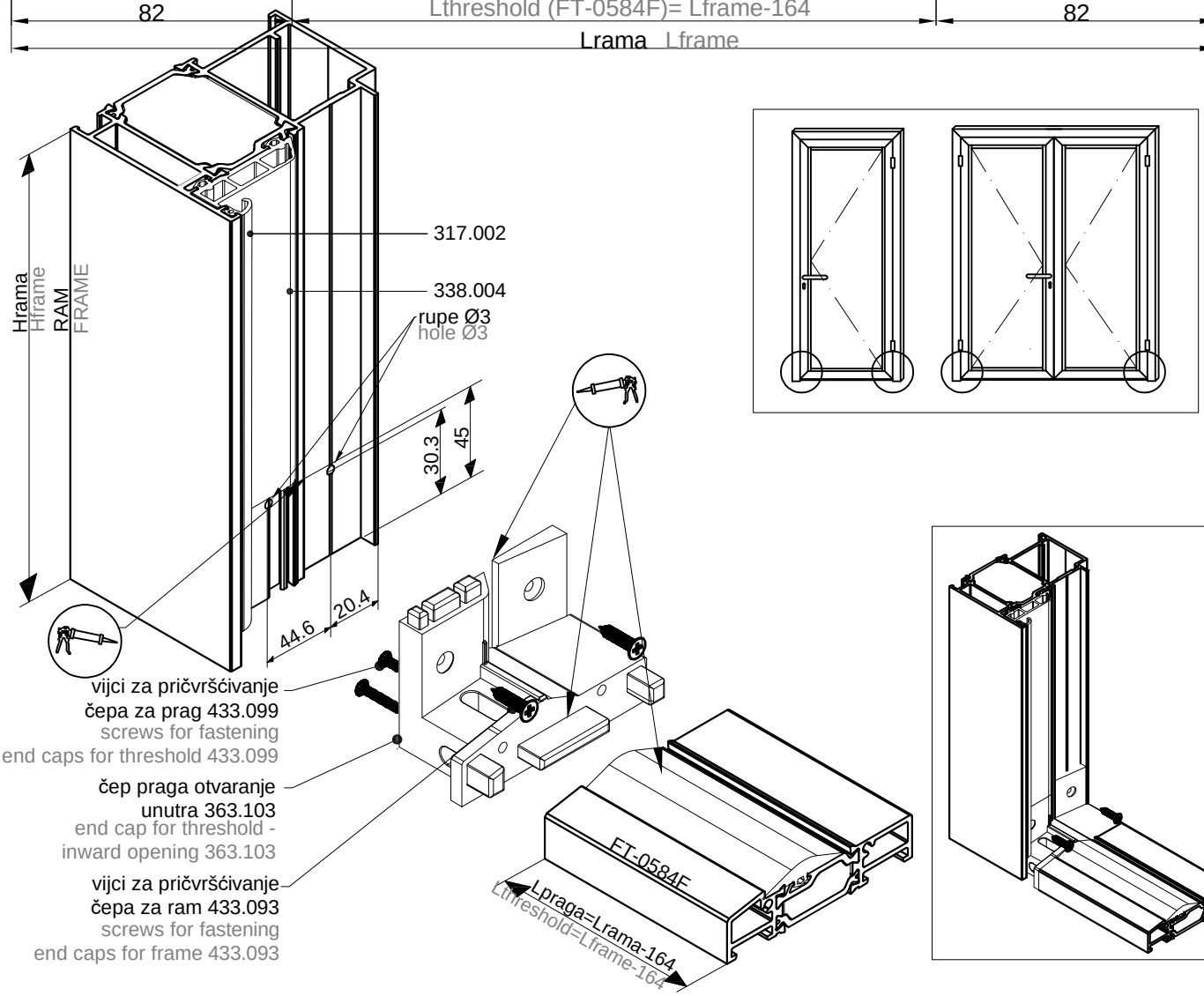
3. Level threshold profile with insert and connect them
4. Level threshold profile with the connected insert with the frame and connect them
5. **After joining the profiles, all profile connections must be filled with metal glue** /e.g. "Henkel" - *Teroson MS 939* /.
6. Leaked glue that comes from the joints remove with cleaning and degreasing products /e.g. "Henkel" - *Teroson VR 20 ili Teroson FL+* /.

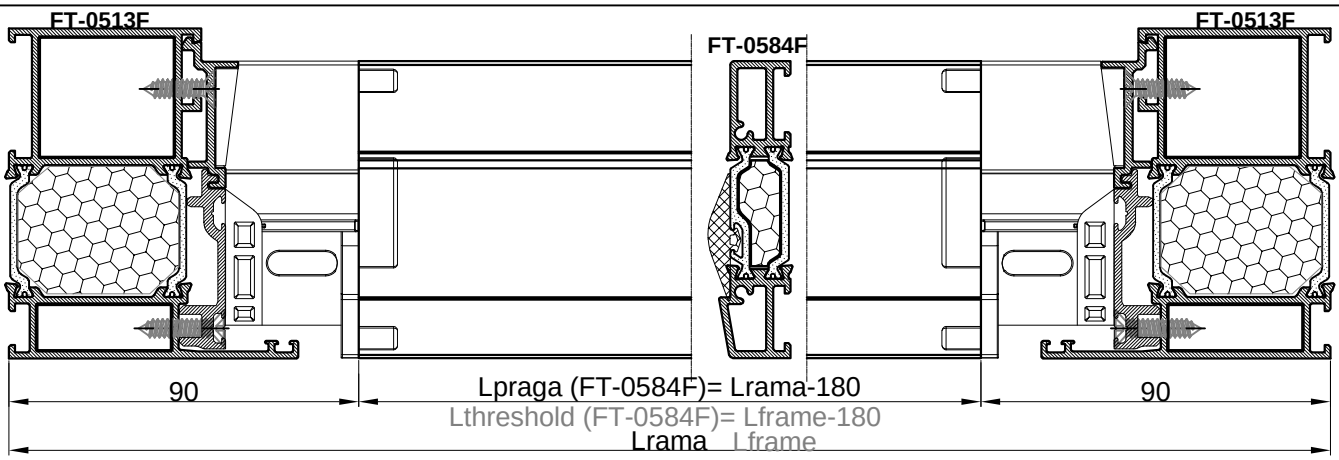
NOTE:

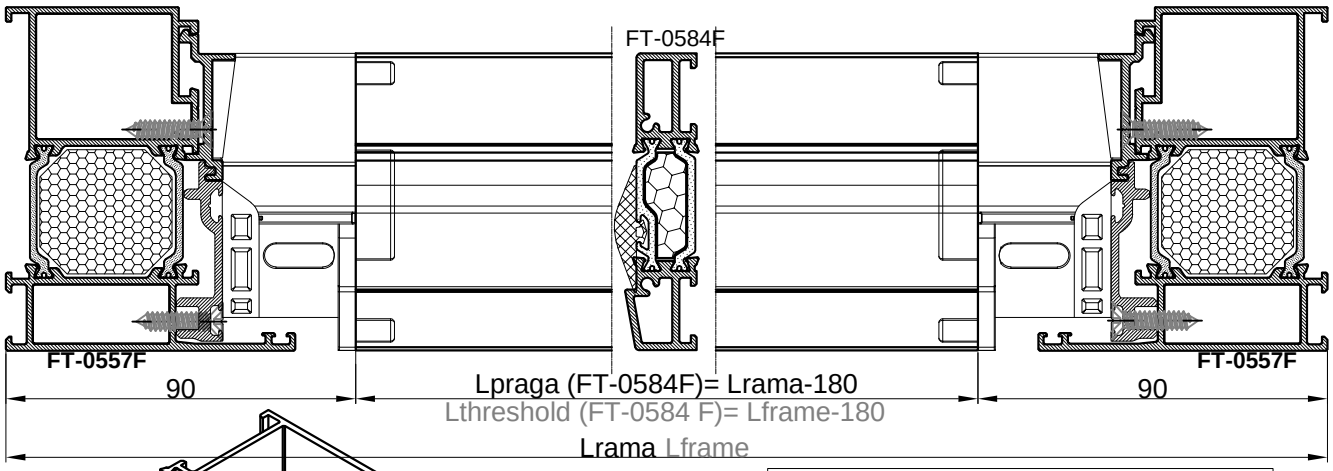
By gluing the profile, as well as all profile joints with a metal glue, necessary air and water tightness of the joint as well as additional mechanical properties is ensured.

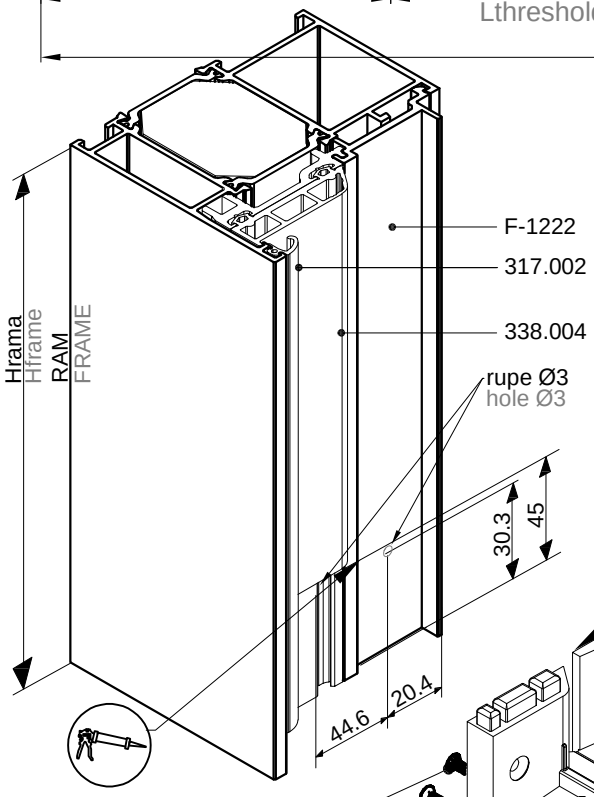

FT-0551F
FT-0584F
FT-0551F
Lpraga (FT-0584F)= Lrama-164
threshold (FT-0584 F)= Lframe-164
82
82
Lrama
Lframe

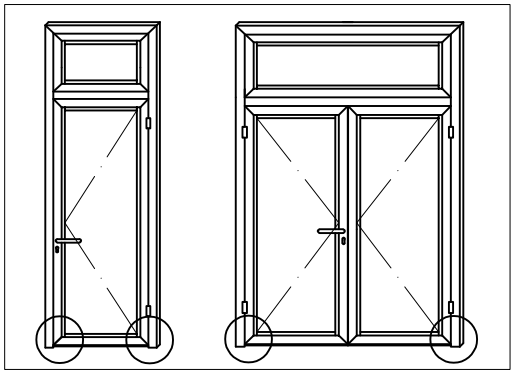

FT-0556F
FT-0584 F
FT-0556 F
Lpraga (FT-0584F)= Lrama-164
Lthreshold (FT-0584F)= Lframe-164
82
82
Lrama
Lframe

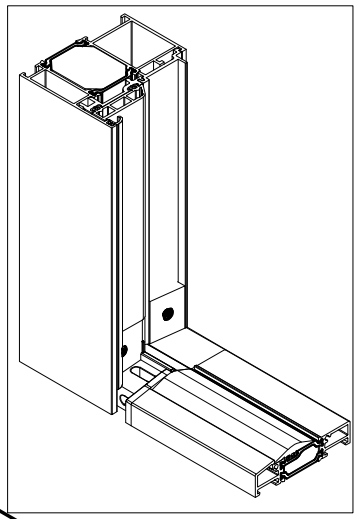

Hrama
Hframe
RAM
FRAME
317.002
338.004
rupe Ø3
hole Ø3
30.3
45
44.6
20.4
vijci za pričvršćivanje čepa za prag 433.099
screws for fastening end caps for threshold 433.099
čep praga otvaranje unutra 363.103
end cap for threshold - inward opening 363.103
vijci za pričvršćivanje čepa za ram 433.093
screws for fastening end caps for frame 433.093
FT-0584F
Lpraga=Lrama-164
Lthreshold=Lframe-164

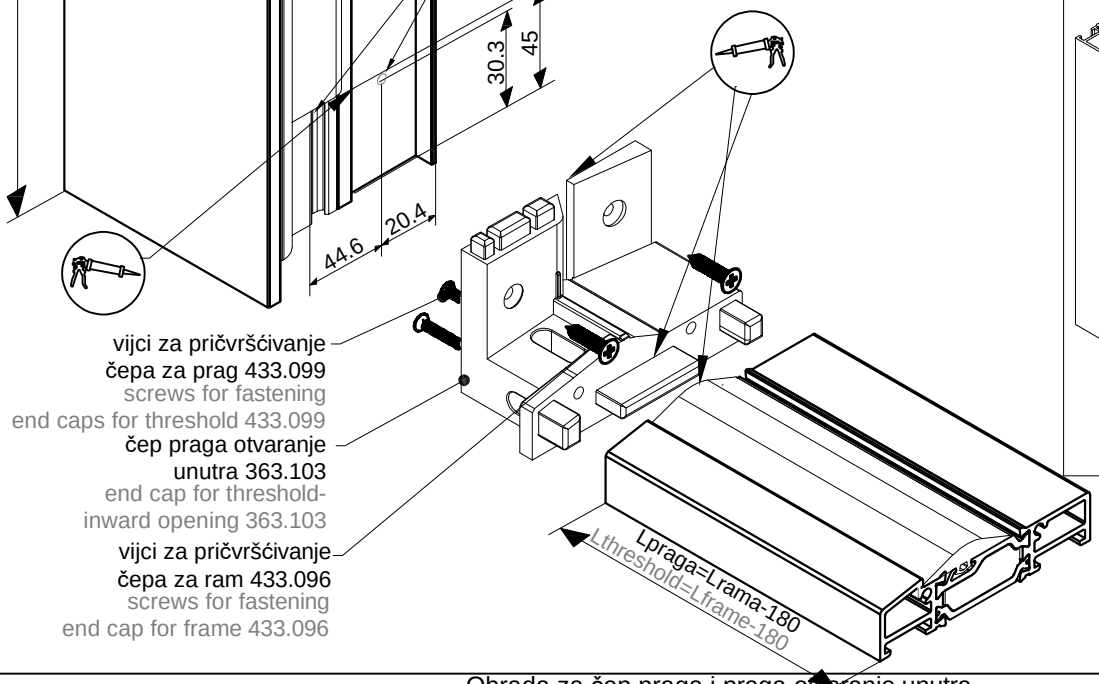

FT-0513F
FT-0584F
FT-0513F
90
Lpraga (FT-0584F)= Lrama-180
Lthreshold (FT-0584F)= Lframe-180
Lrama Lframe
90

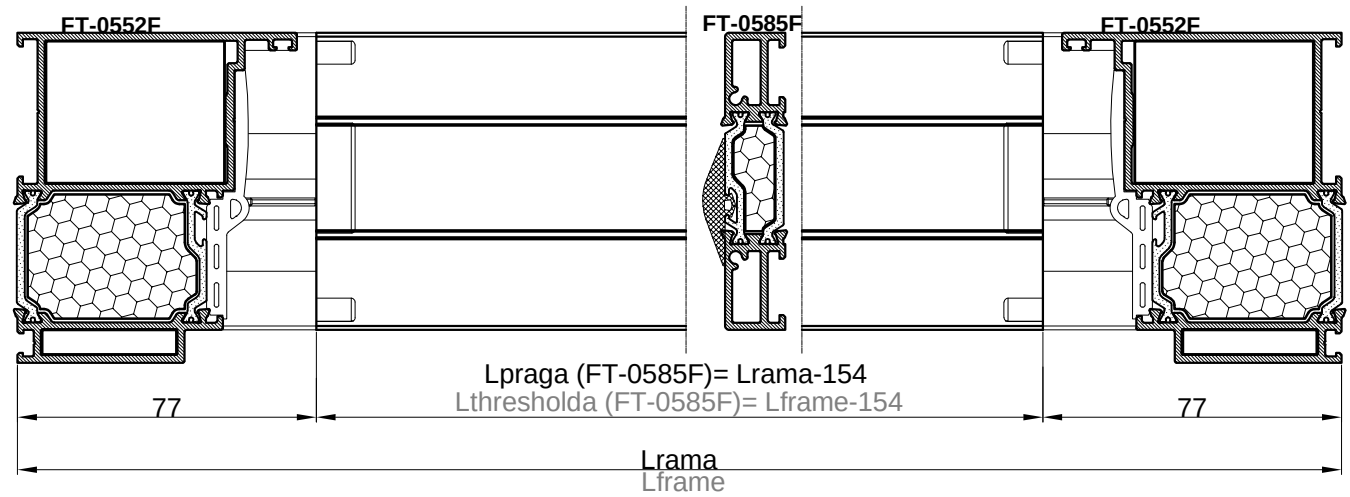

FT-0584F
FT-0557F
FT-0557F
90
Lpraga (FT-0584F)= Lrama-180
Lthreshold (FT-0584 F)= Lframe-180
Lrama Lframe
90

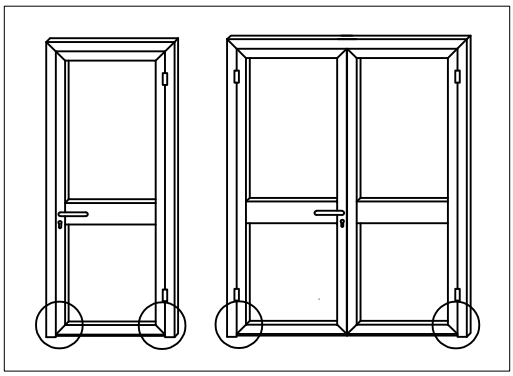

Hrama
Hframe
RAM
FRAME
F-1222
317.002
338.004
rupe Ø3
hole Ø3
30.3
45
44.6
20.4

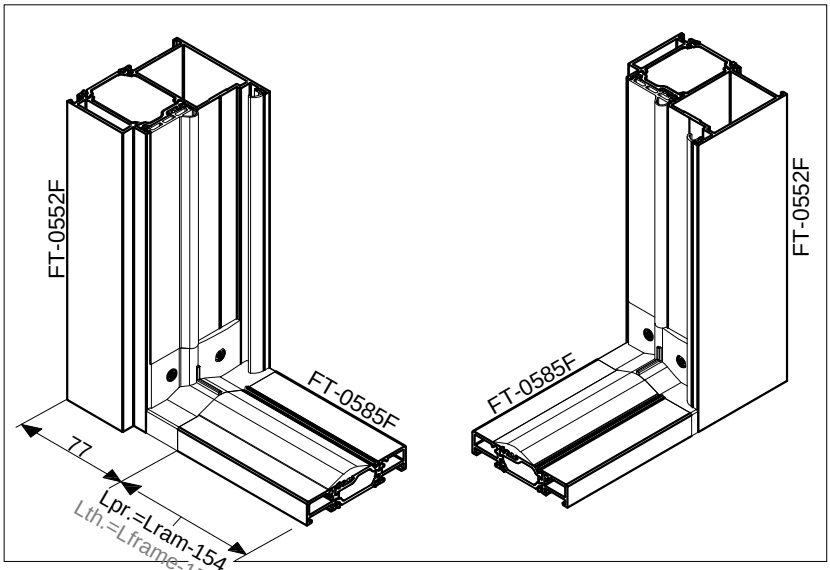


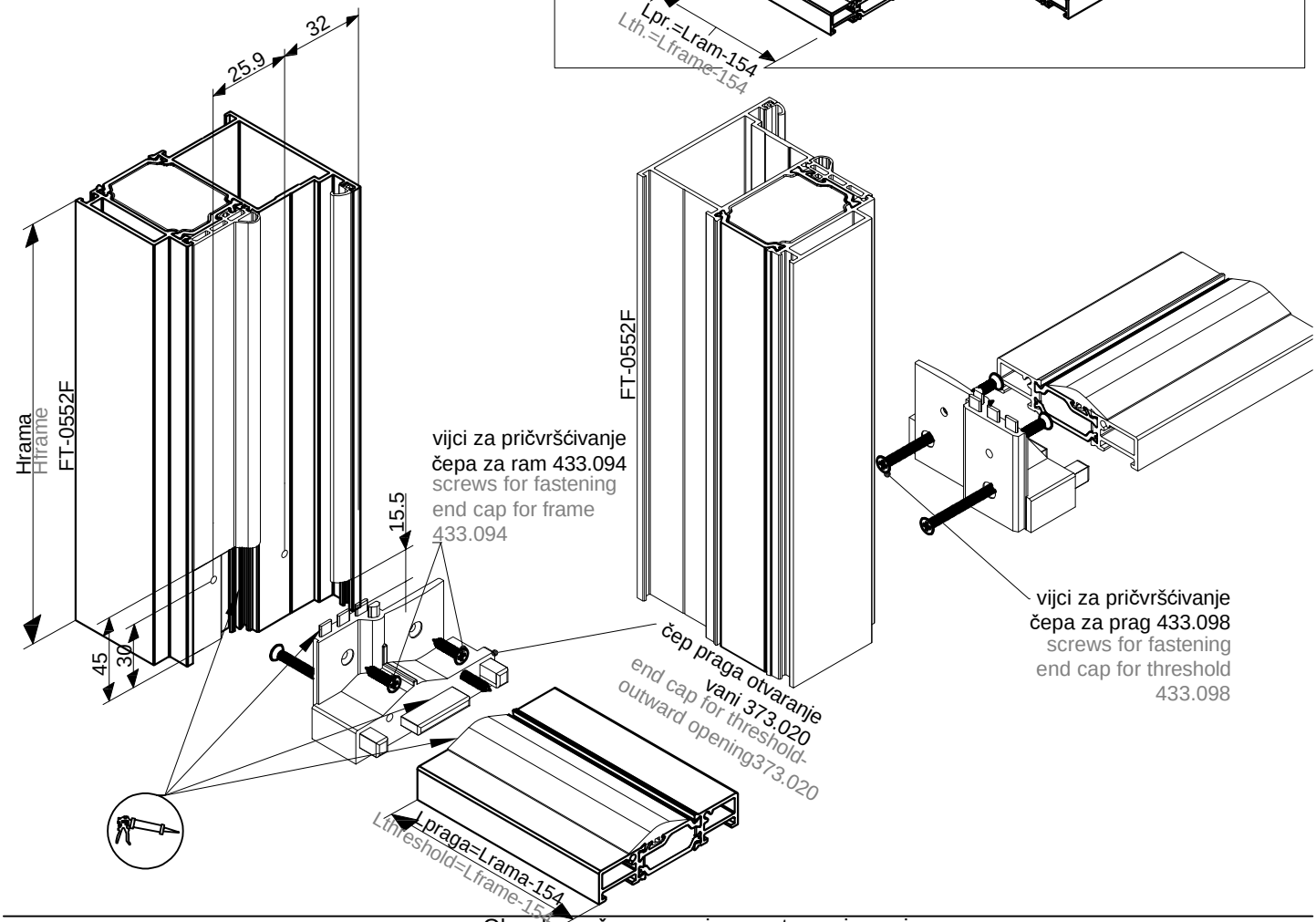



vijci za pričvršćivanje čepa za prag 433.099
screws for fastening end caps for threshold 433.099
čep praga otvaranje unutra 363.103
end cap for threshold-inward opening 363.103
vijci za pričvršćivanje čepa za ram 433.096
screws for fastening end cap for frame 433.096
Lpraga=Lrama-180
Lthreshold=Lframe-180

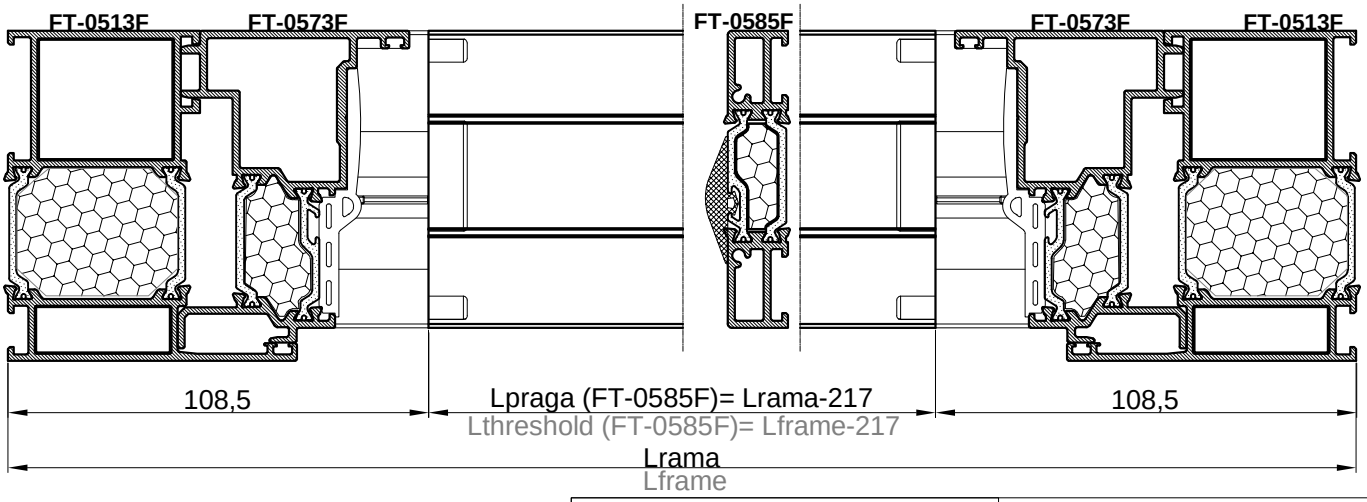


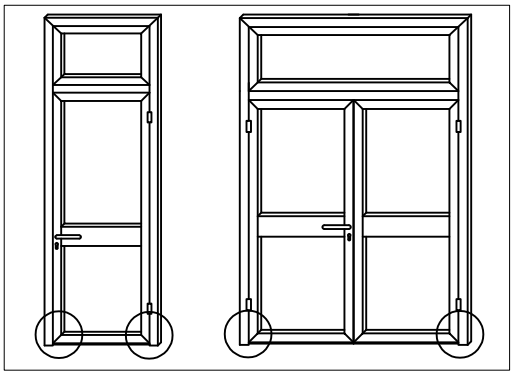


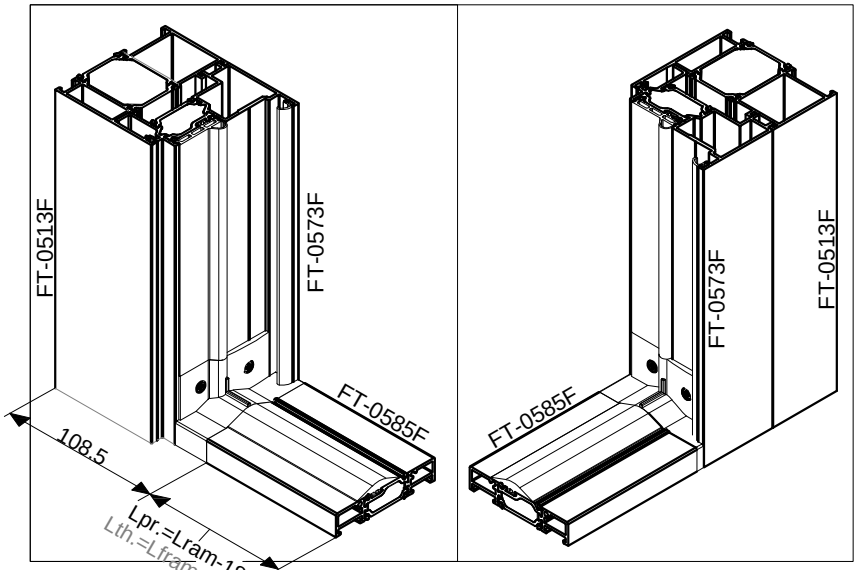


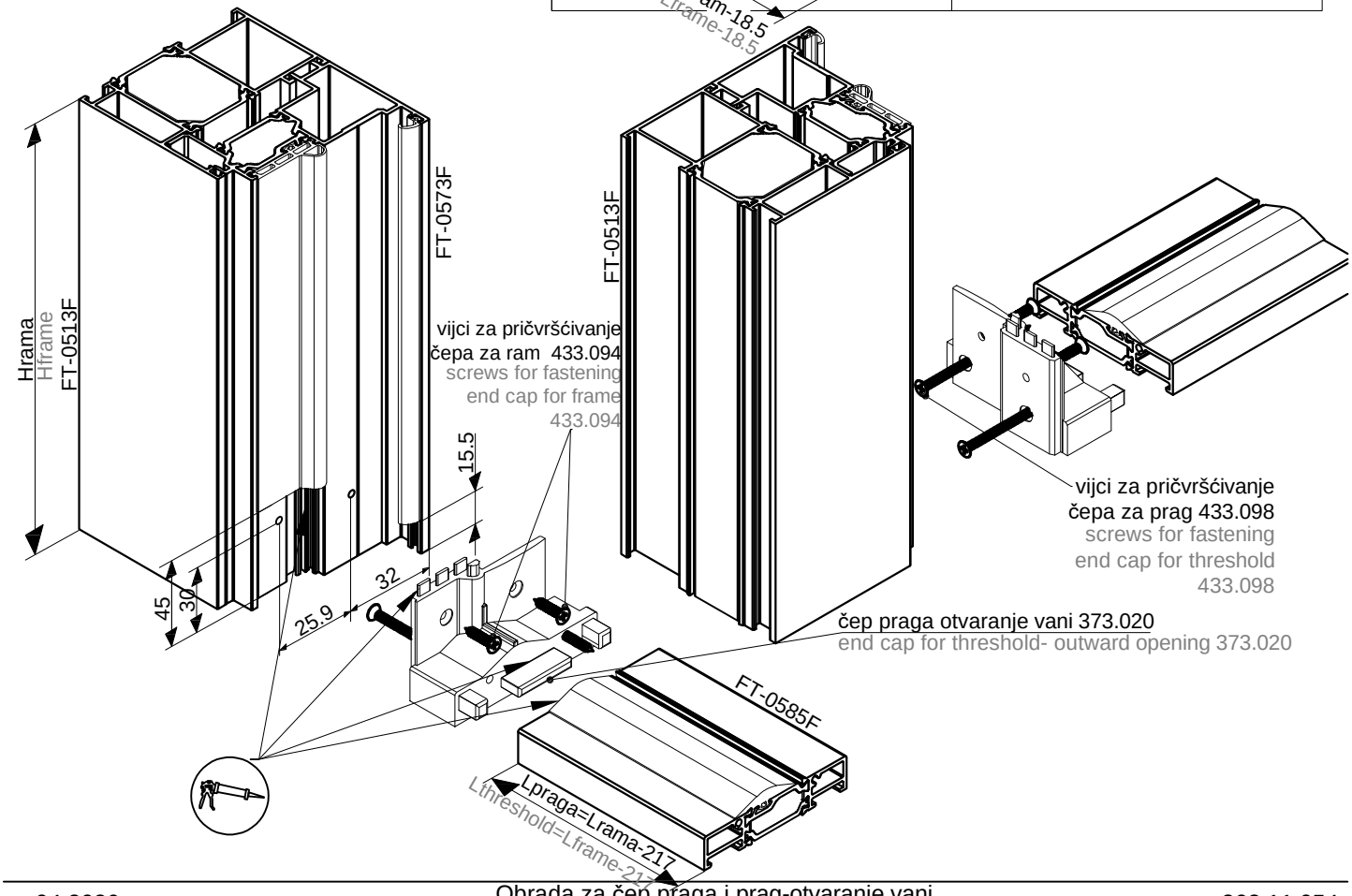


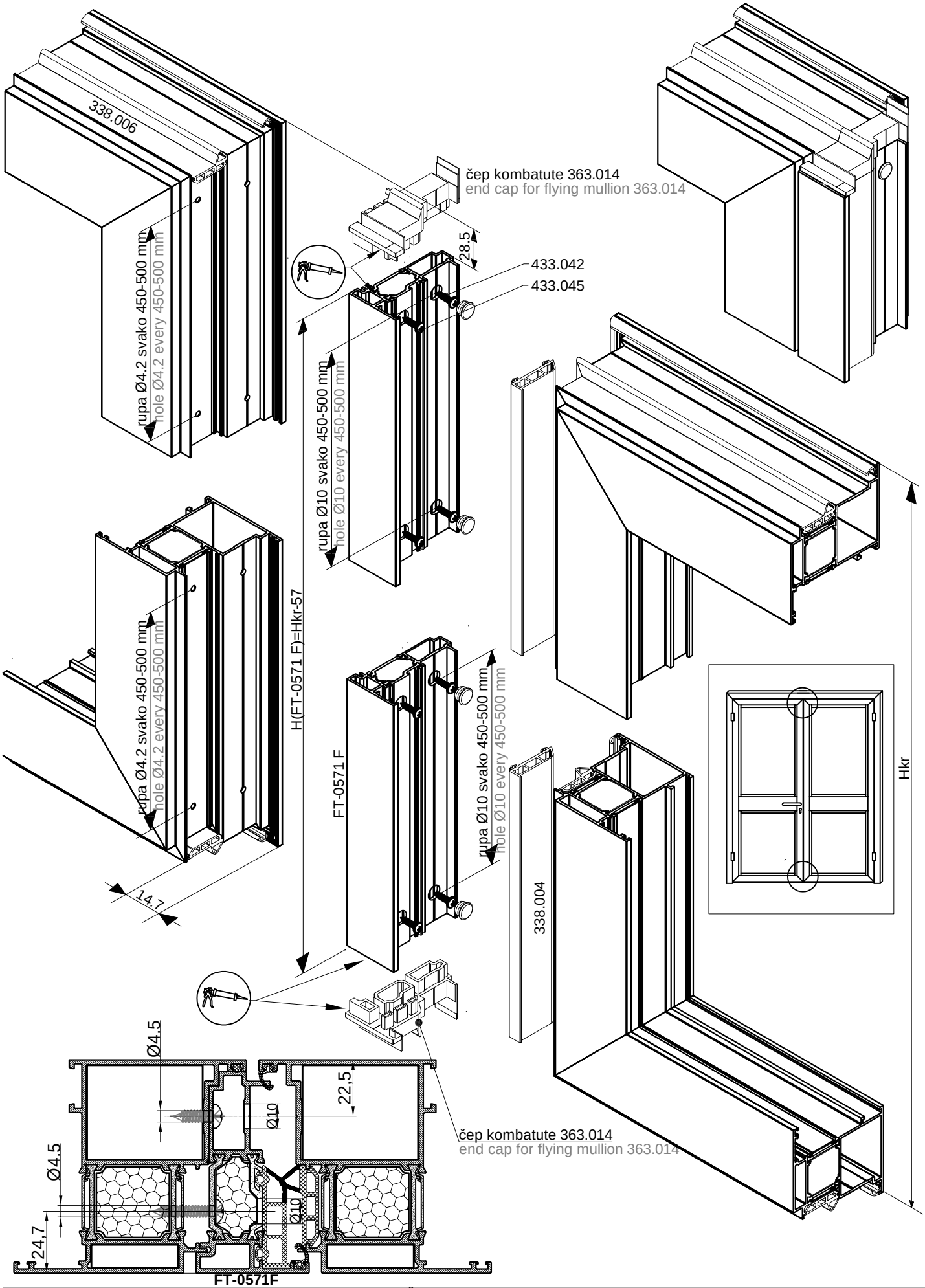
Obrada za čep praga i prag-otvaranje vani
Processing for end cap for threshold and threshold-outward opening

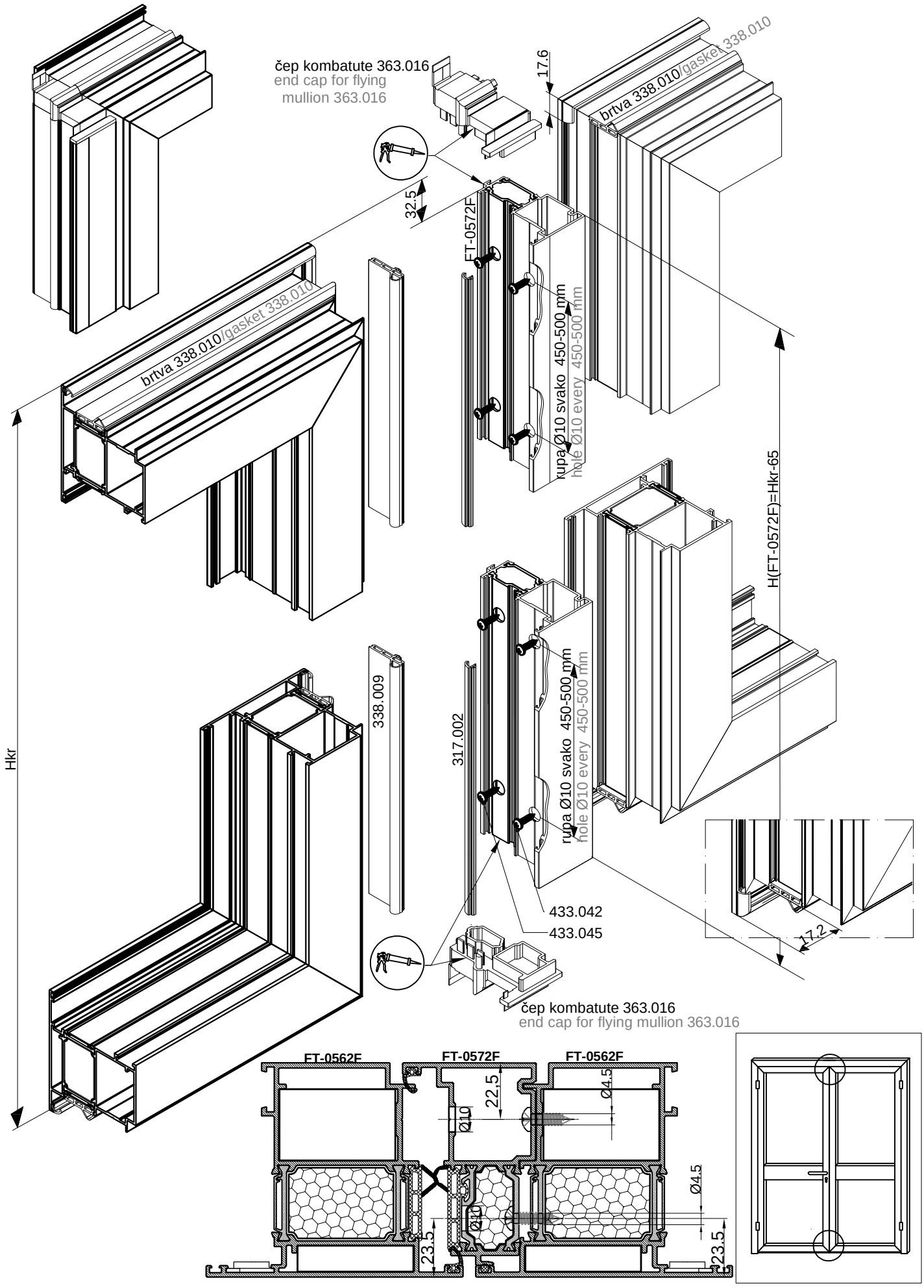

FT-0513F
FT-0573F
FT-0585F
FT-0573F
FT-0513F
108,5
Lpraga (FT-0585F)= Lrama-217
Lthreshold (FT-0585F)= Lframe-217
108,5
Lrama
Lframe

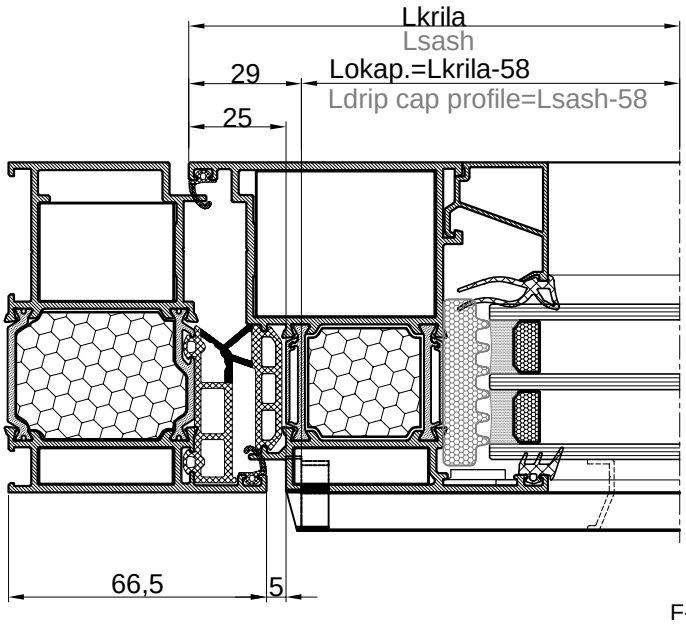


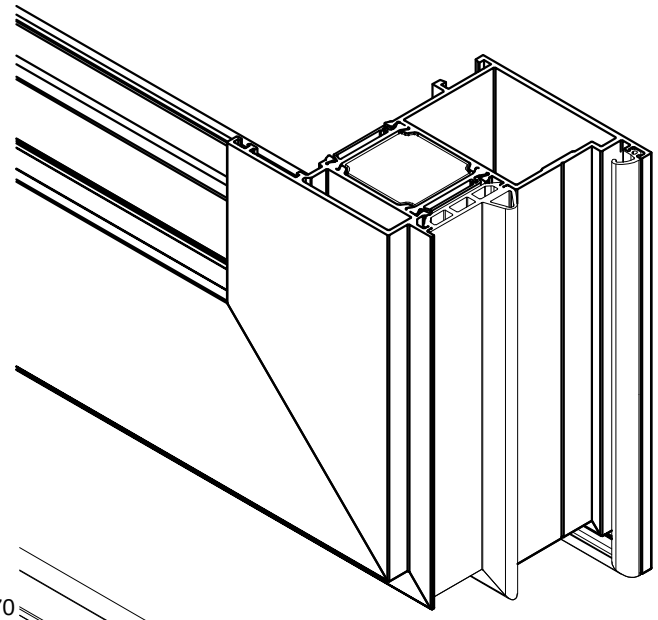

FT-0513F
FT-0573F
FT-0585F
108,5
Lpr.=Lram-18.5
Lth.=Lframe-18.5
FT-0585F
FT-0573F
FT-0513F

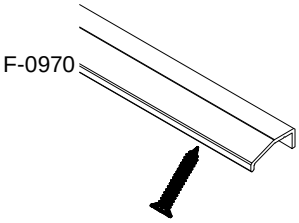

Hrama
Hframe
FT-0513F
FT-0573F
45
30
25.9
32
15.5
vijci za pričvršćivanje čepa za ram 433.094
screws for fastening end cap for frame 433.094
FT-0513F
vijci za pričvršćivanje čepa za prag 433.098
screws for fastening end cap for threshold 433.098
čep praga otvaranje vani 373.020
end cap for threshold- outward opening 373.020
FT-0585F
Lpraga=Lrama-217
Lthreshold=Lframe-217


338.006
rupa Ø4.2 svako 450-500 mm
hole Ø4.2 every 450-500 mm
čep kombatute 363.014
end cap for flying mullion 363.014
28.5
433.042
433.045
rupa Ø10 svako 450-500 mm
hole Ø10 every 450-500 mm
rupa Ø4.2 svako 450-500 mm
hole Ø4.2 every 450-500 mm
H(FT-0571 F)=Hkr-57
14.7
FT-0571 F
rupa Ø10 svako 450-500 mm
hole Ø10 every 450-500 mm
338.004
Hkr
Ø4.5
22.5
Ø10
Ø4.5
Ø10
24.7
FT-0571F
čep kombatute 363.014
end cap for flying mullion 363.014


čep kombatute 363.016
end cap for flying
mullion 363.016
17.6
brtva 338.010/gasket 338.010
32.5
FT-0572F
rupa Ø10 svako 450-500 mm
hole Ø10 every 450-500 mm
brtva 338.010/gasket 338.010
H(FT-0572F)=Hkr-65
Hkr
338.009
317.002
rupa Ø10 svako 450-500 mm
hole Ø10 every 450-500 mm
433.042
433.045
17.2
čep kombatute 363.016
end cap for flying mullion 363.016
FT-0562F
FT-0572F
FT-0562F
22,5
Ø10
Ø4.5
Ø4.5
Ø10
23.5
23.5



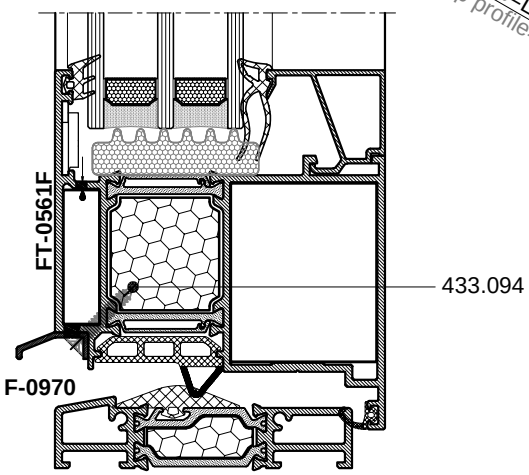




433.094

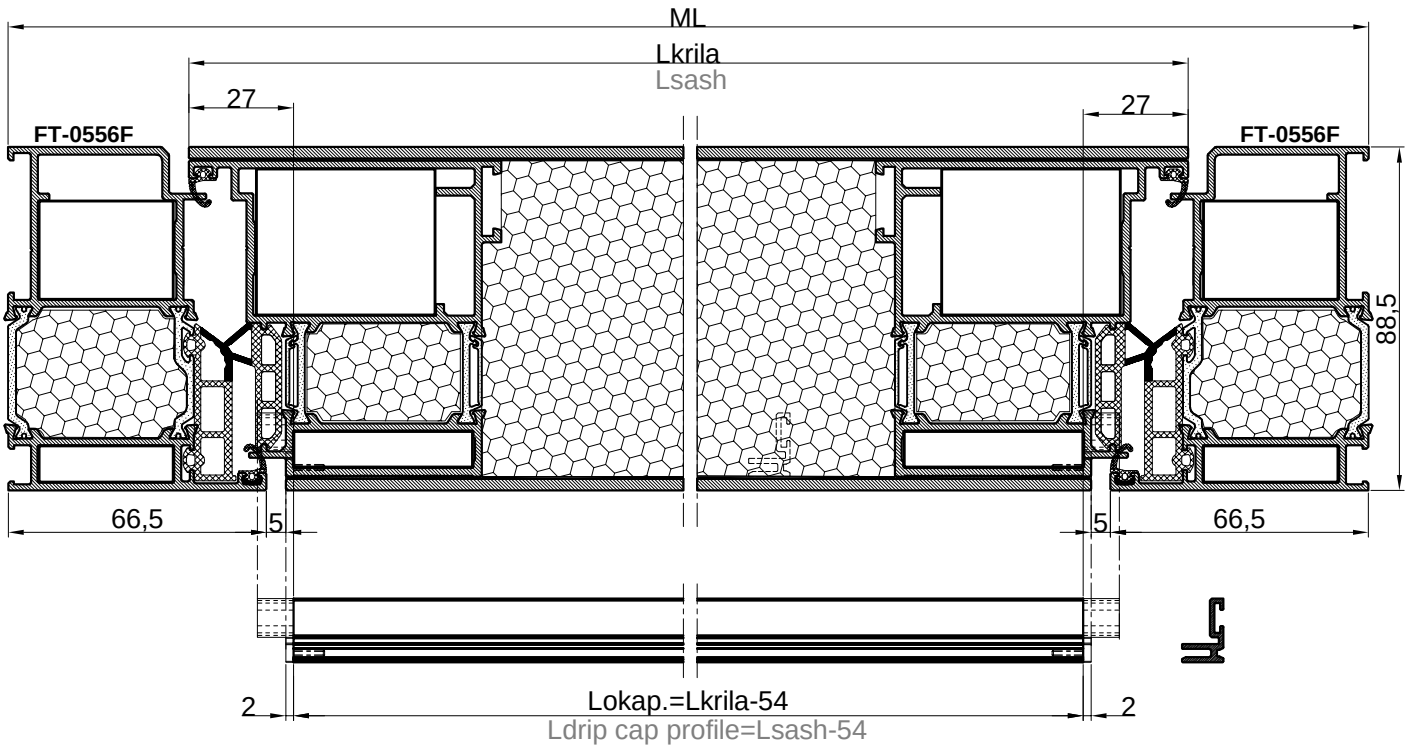
čep okapnice 375.001
end cap for drip cap profile 375.001

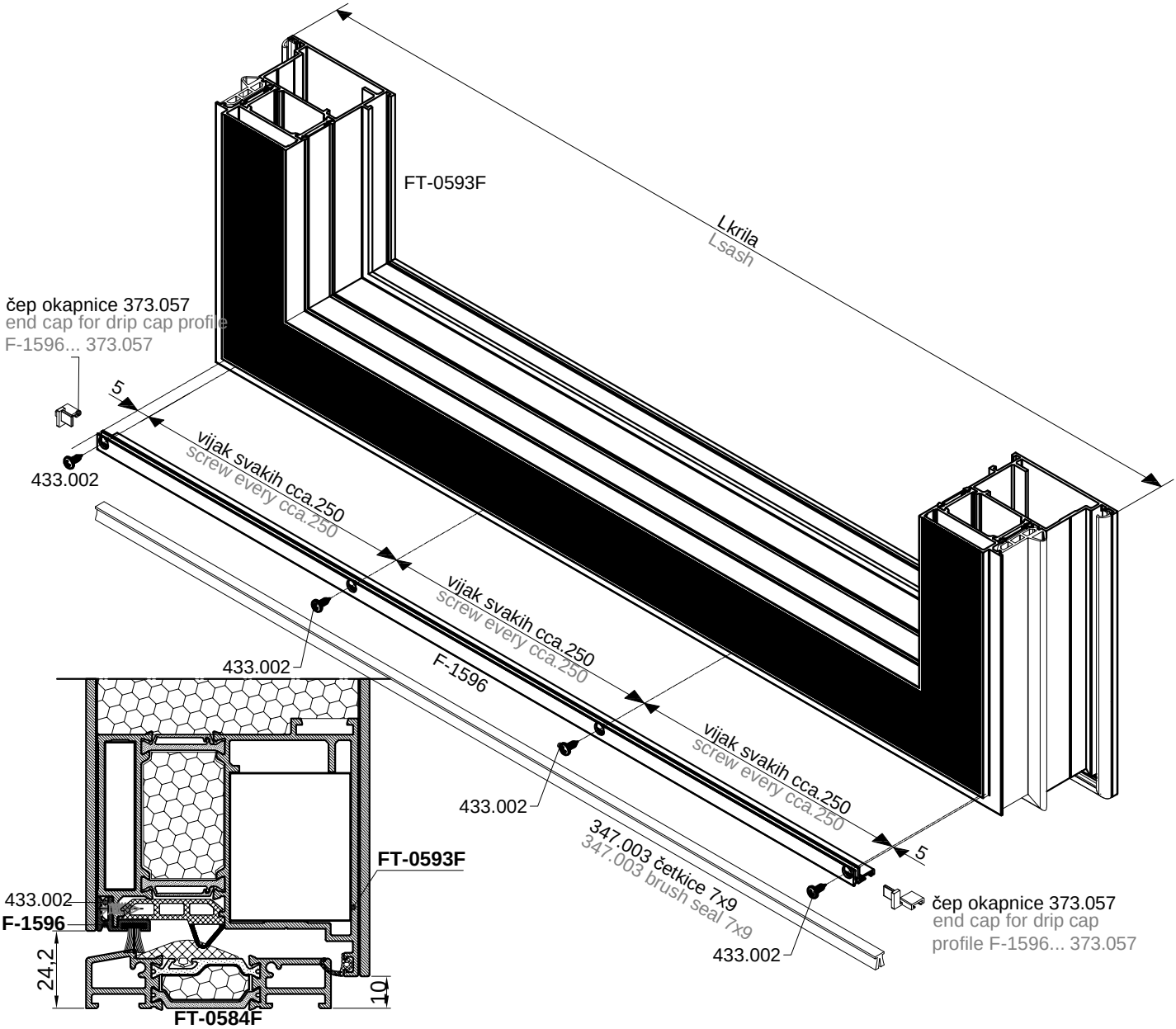
čep okapnice 375.001
end cap for dip cap profile 375.001



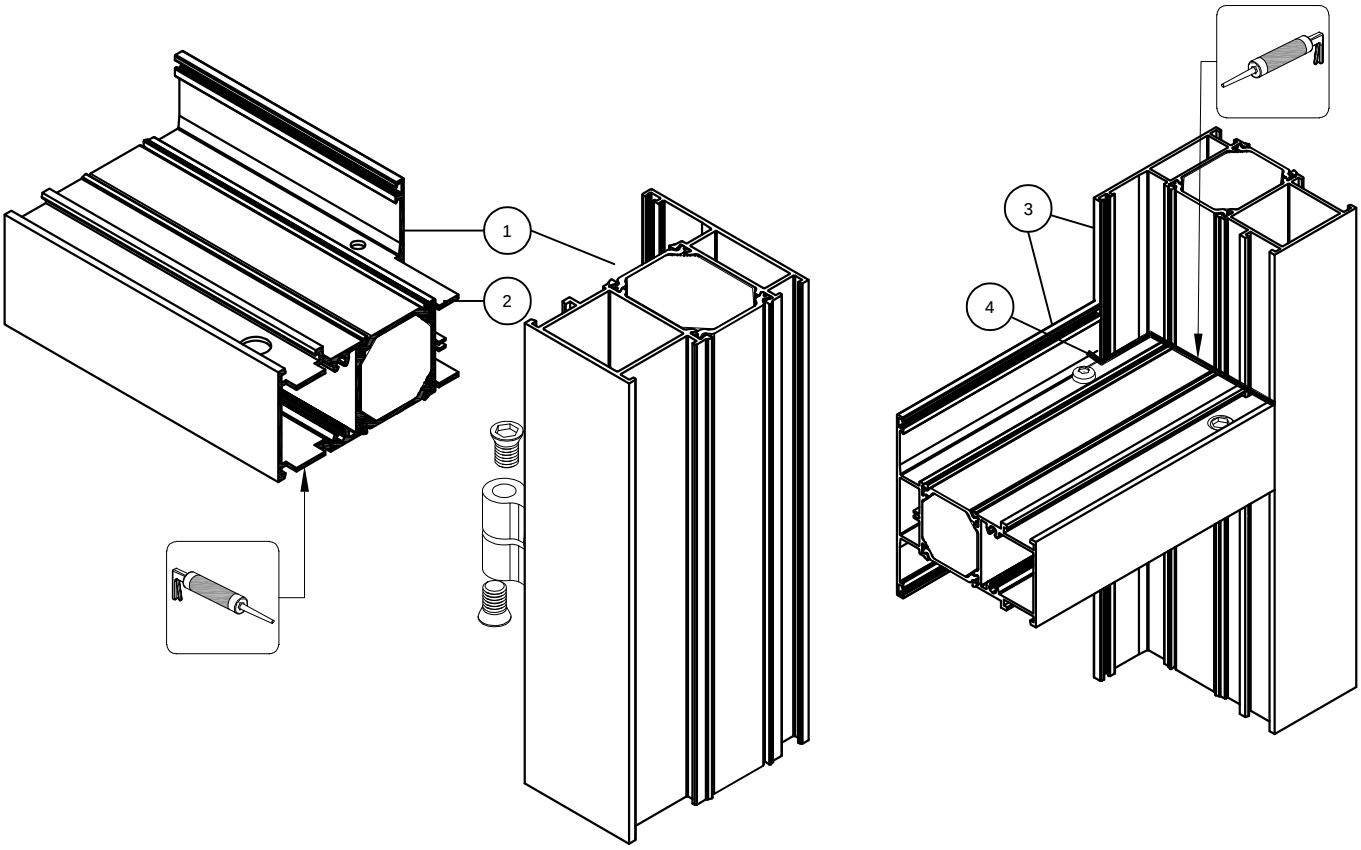
433.094
(vijak 3.5 x22DIN 7982)
(screw 3.5 x22DIN 7982)

čep okapnice 375.001
end cap for dip cap profile 375.001


ML
Lkrila
Lsash
27
27
FT-0556F
FT-0556F
88,5
66,5
5
5
66,5
2
Lokap.=Lkrila-54
Ldrip cap profile=Lsash-54


FT-0593F
Lkrila
Lsash
čep okapnice 373.057
end cap for drip cap profile
F-1596... 373.057
5
433.002
vijak svakih cca.250
screw every cca.250
vijak svakih cca.250
screw every cca.250
433.002
F-1596
vijak svakih cca.250
screw every cca.250
433.002
347.003 četkice 7x9
347.003 brush seal 7x9
433.002
5
čep okapnice 373.057
end cap for drip cap
profile F-1596... 373.057
FT-0593F
433.002
F-1596
24,2
10
FT-0584F

SPAJANJE PROFILA POMOĆU VEZNIKA
CONNECTING OF PROFILES BY USING CONNECTING ELEMENT -(T-BRACKET)



POSTUPAK SPAJANJA PROFILA :

1. Sve površine koje se spajaju-rezove očistiti i odmastiti odgovarajućim sredstvom /npr. "Henkel" - *Teroson VR 20 ili Teroson FL+* /.
2. Premazati sve površine koje se spajaju ljepilom za metal /npr. "Henkel" - *Teroson MS 939* /.
3. Profile s veznicima izravnati i spojiti
4. **Nakon spajanja profila, sve spojeve profila ispuniti ljepilom za metal** /npr. "Henkel" - *Teroson MS 939* /.
5. Dio ljepila koji iscuri između rezova očistiti sredstvom za čišćenje i odmašćivanje /npr. "Henkel" - *Teroson VR 20 ili Teroson FL+* /.

NAPOMENA:

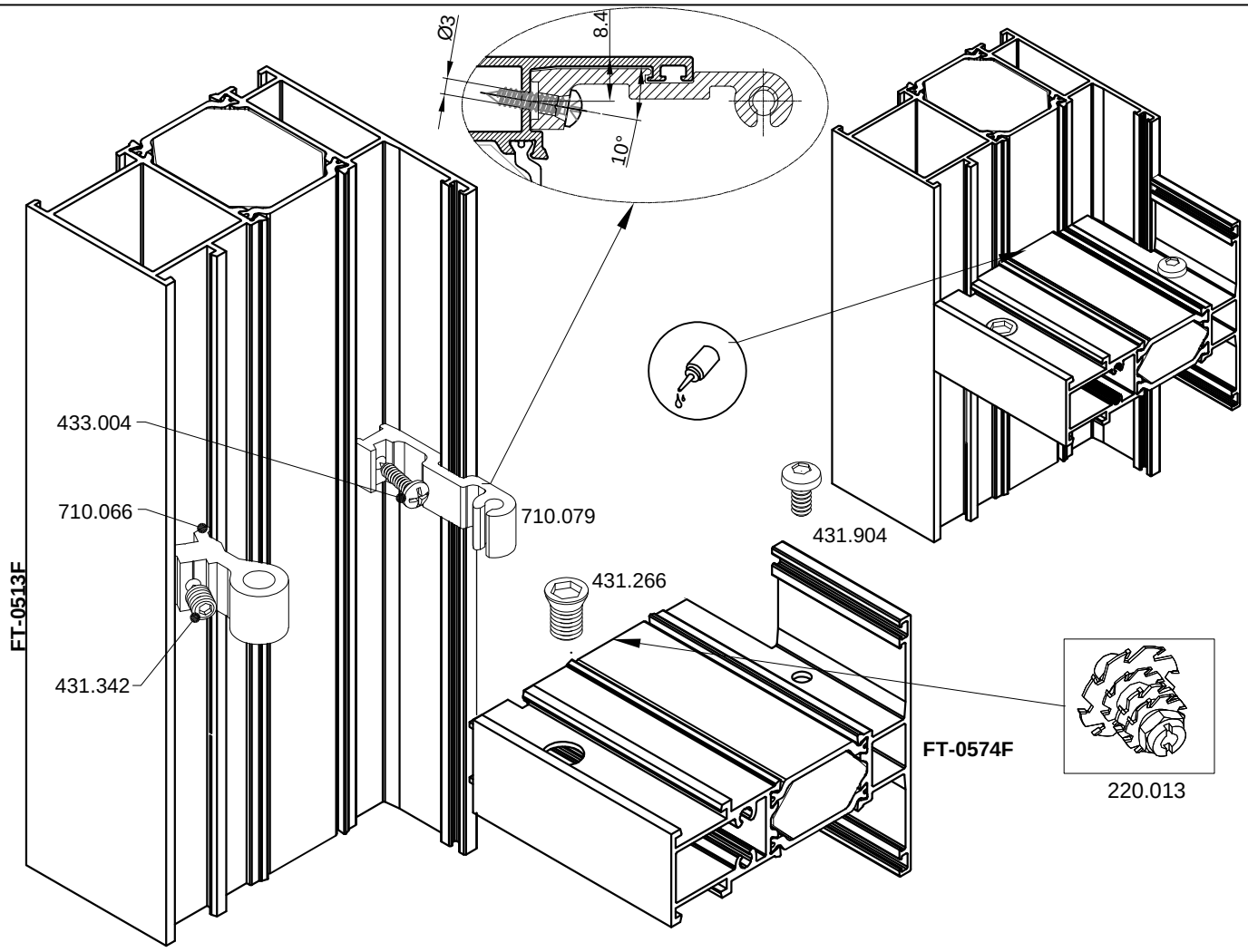
Lijepljenjem rezova, kao i svih spojeva profila sa ljepilima za metal, osigurava se potrebna zrako i vodonepropusnosti spoja kao i dodatna mehanička čvrstoća spoja.

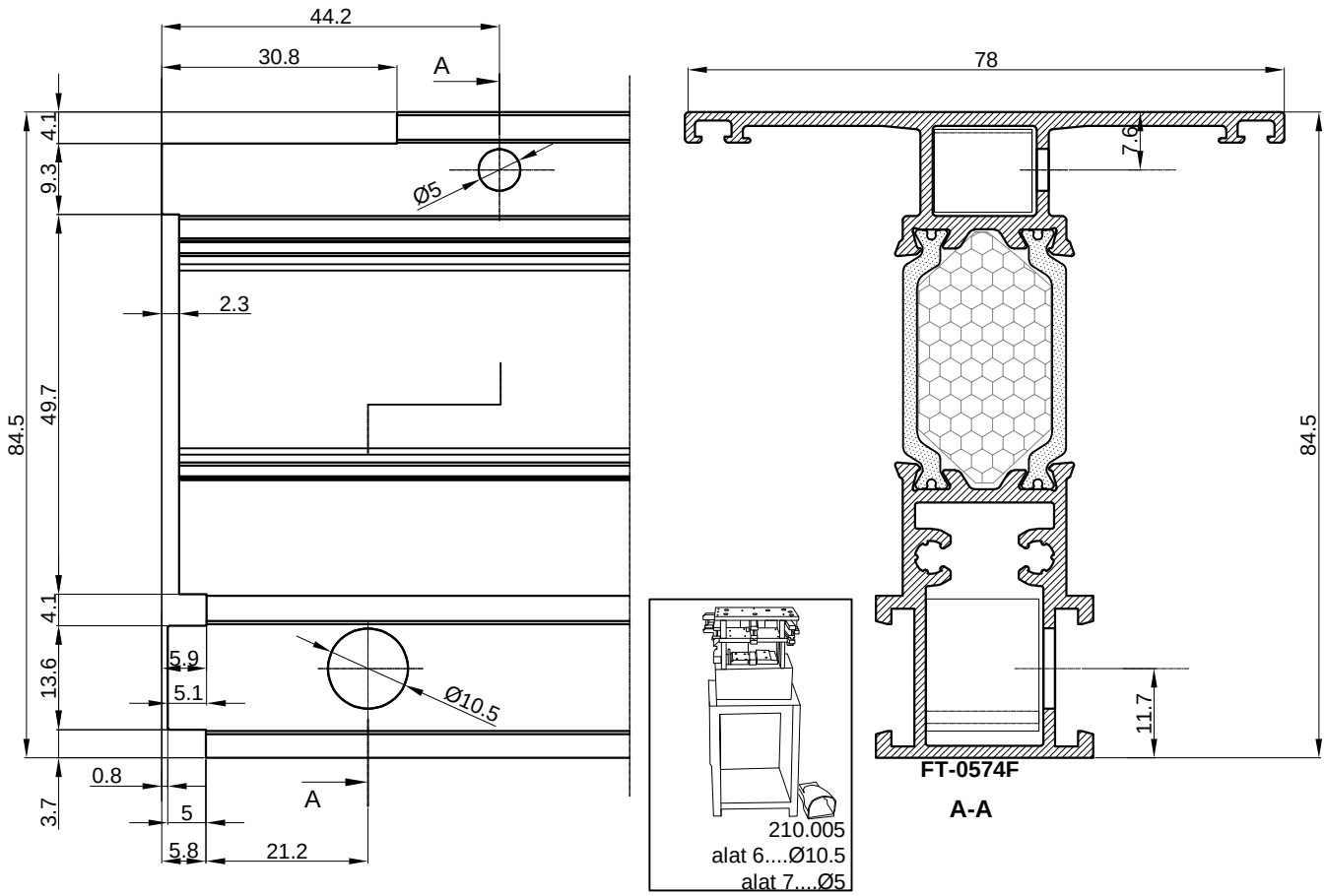
PROFILE CONNECTION PROCEDURE:

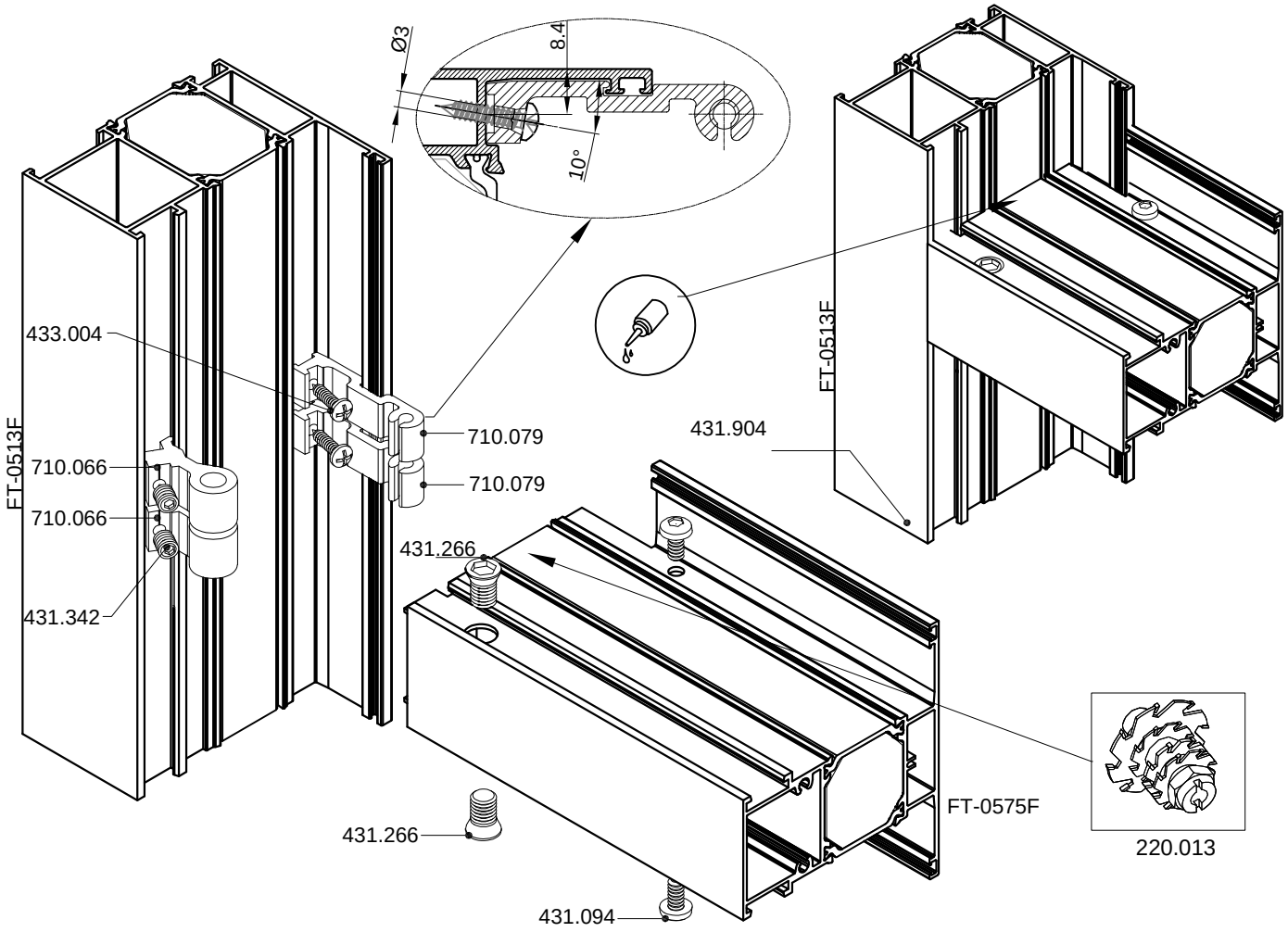
1. Clean and degrease all connecting surfaces with suitable products /e.g. "Henkel" - *Teroson VR 20 ili Teroson FL+* /.
2. Smear connecting all surfaces with metal glue /e.g. "Henkel" - *Teroson MS 939* /.
3. Level profiles with connecting element (T-bracket) and connect
4. **After joining the profile, all profile joints must be filled with metal glue** /e.g. "Henkel" - *Teroson MS 939* /.
5. Leaked glue that comes from the joints remove with cleaning and degreasing products /e.g. "Henkel" - *Teroson VR 20 ili Teroson FL+* /.

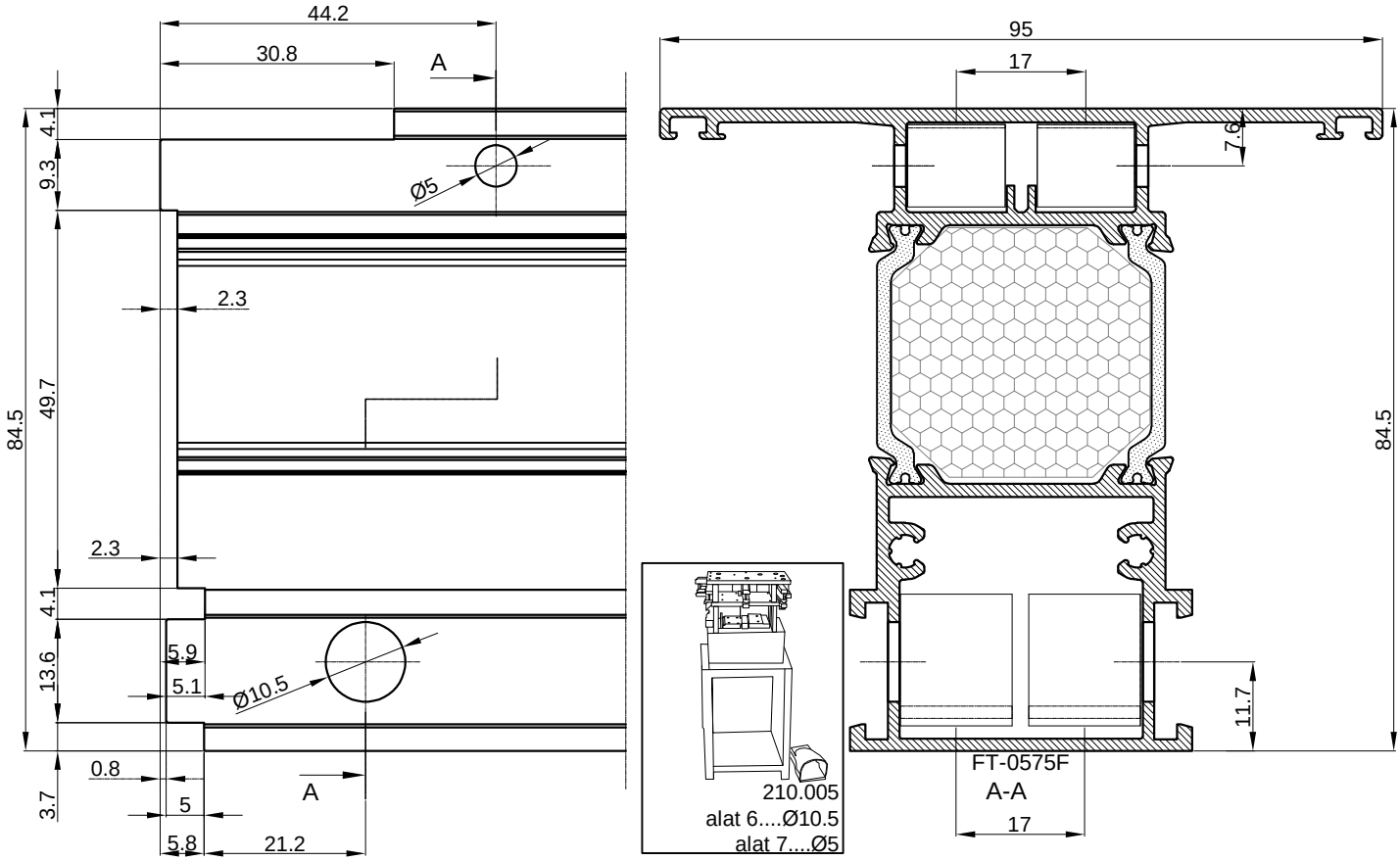
NOTE:

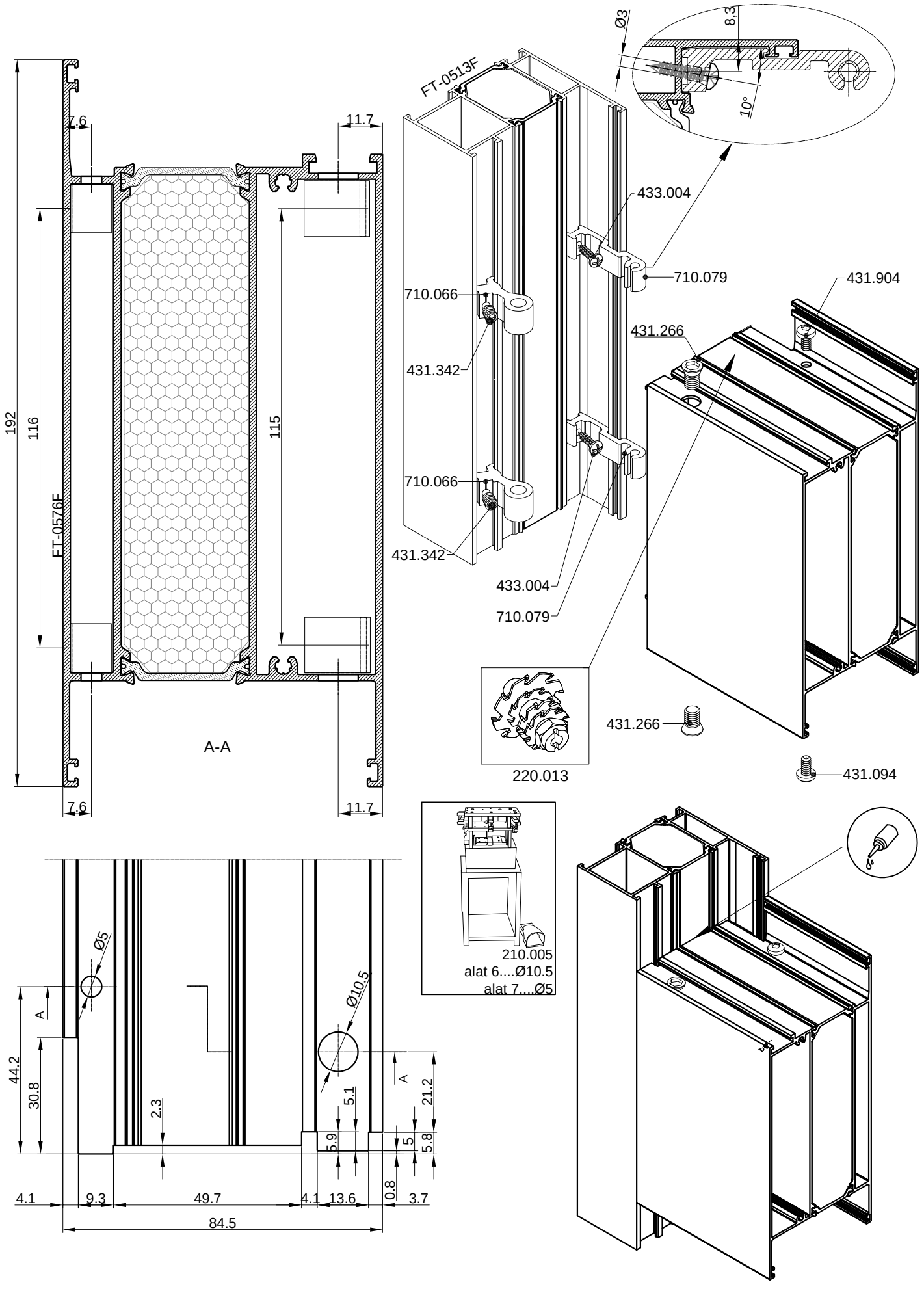
By gluing the profile, as well as all profile joints with a metal glue, necessary air and water tightness of the joint as well as additional mechanical properties is ensured.

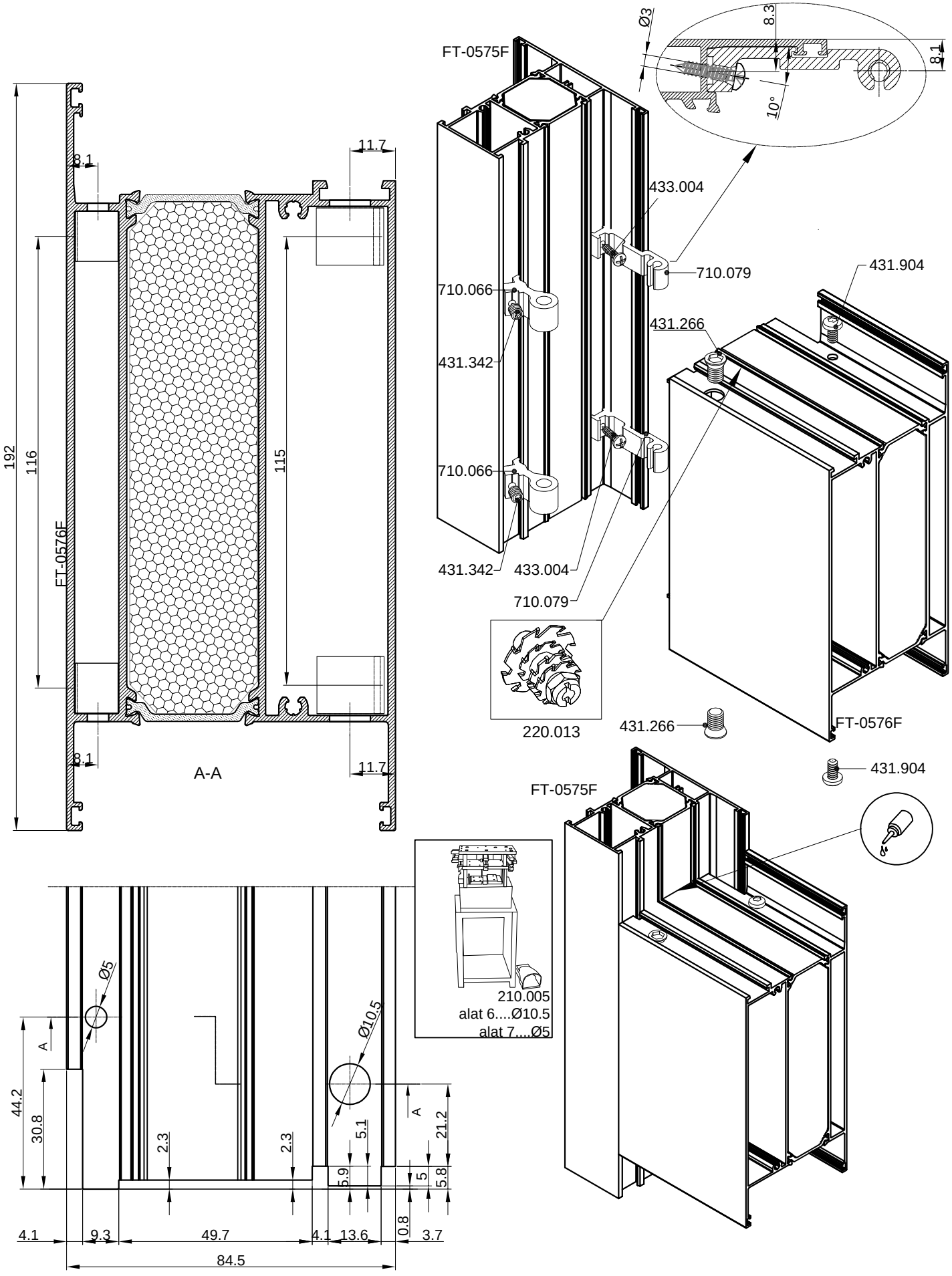

Ø3
8.4
10°
433.004
710.066
710.079
431.342
FT-0513F
431.904
431.266
FT-0574F
220.013

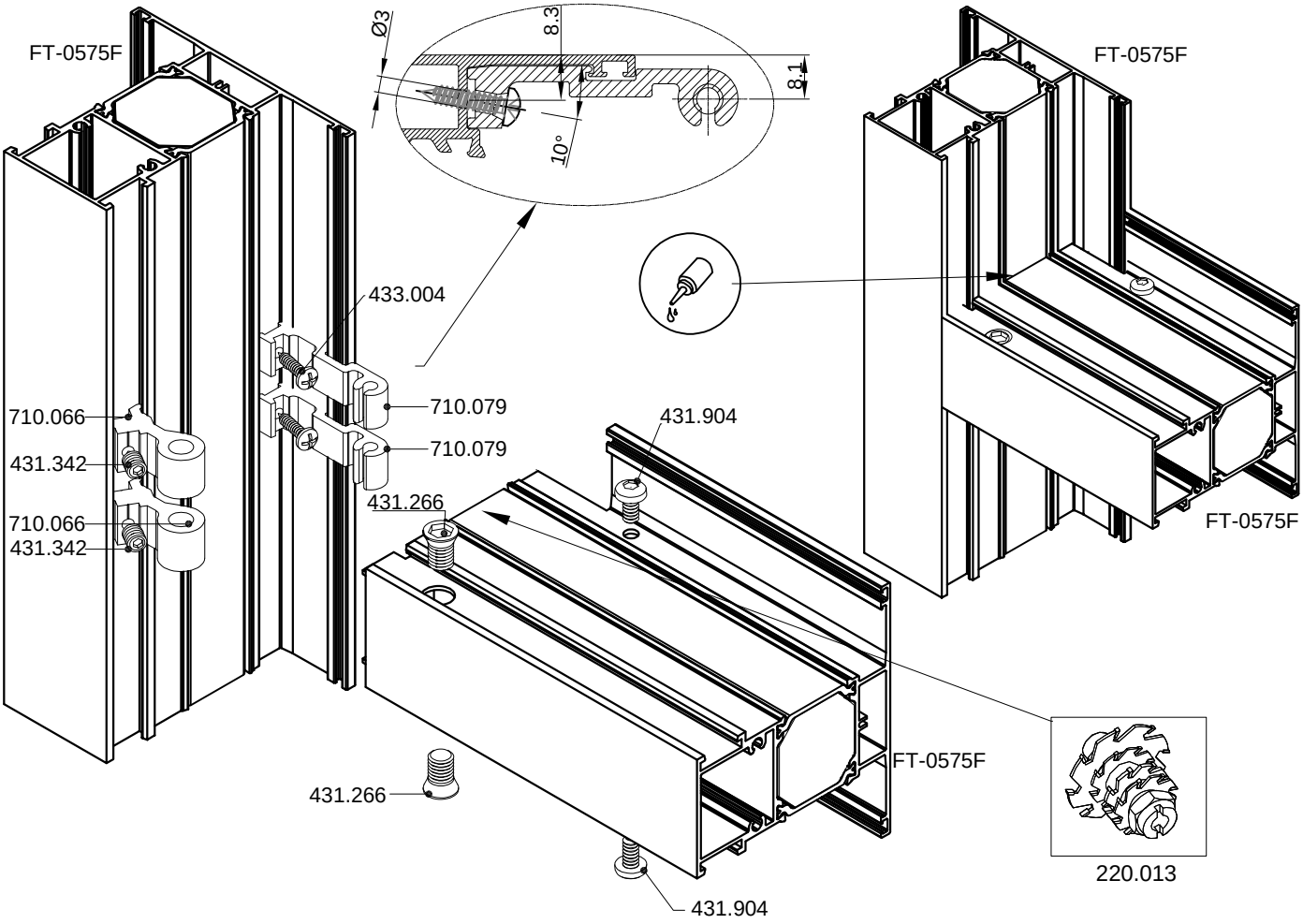

44.2
30.8
A
4.1
9.3
Ø5
2.3
84.5
49.7
4.1
13.6
5.9
5.1
Ø10.5
0.8
5
5.8
21.2
3.7
A
78
7.6
84.5
11.7
FT-0574F
A-A
210.005
alat 6....Ø10.5
alat 7....Ø5

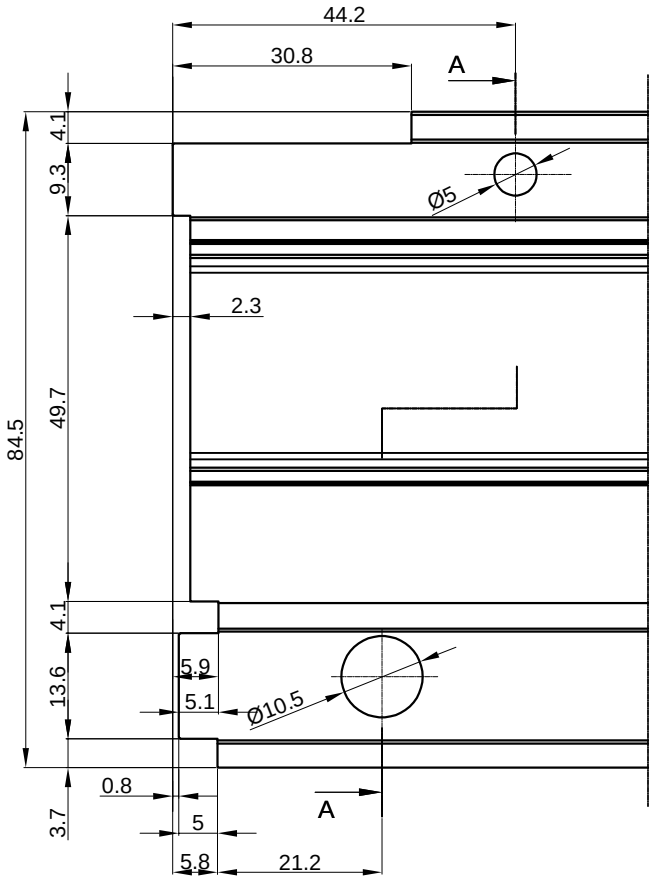

Ø3
8.4
10°
2
433.004
710.079
710.079
710.066
710.066
431.342
FT-0513F
FT-0513F
431.904
431.266
431.266
FT-0575F
220.013
431.094

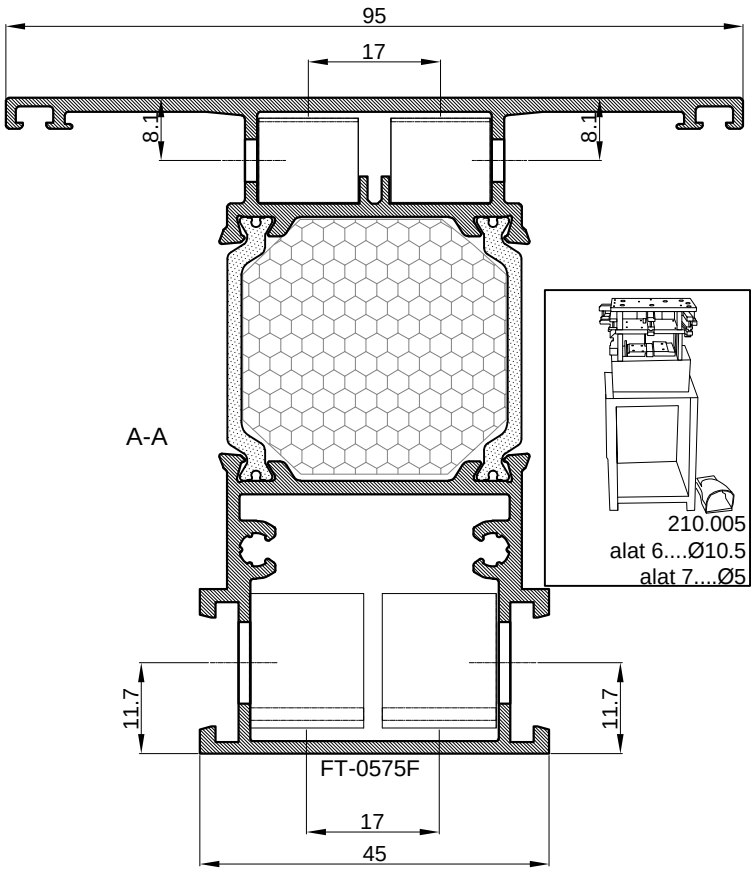

44.2
30.8
A
4.1
9.3
Ø5
2.3
84.5
49.7
2.3
4.1
13.6
5.9
5.1
Ø10.5
0.8
5
5.8
21.2
3.7
A
95
17
7.6
84.5
11.7
FT-0575F
A-A
17
210.005
alat 6....Ø10.5
alat 7....Ø5

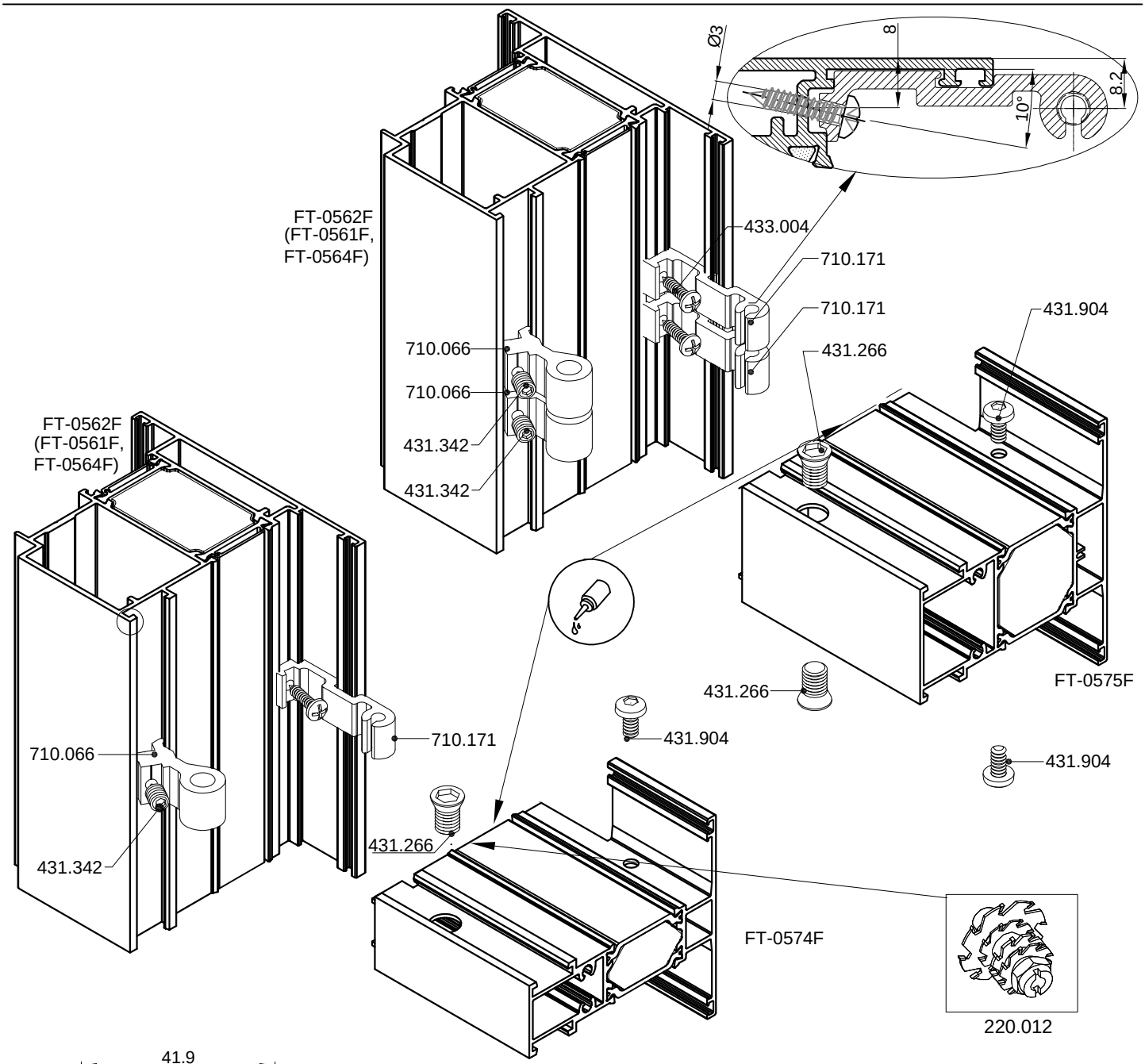

FT-0513F
Ø3
8,3
10°
433.004
710.079
710.066
431.342
710.066
431.342
433.004
710.079
431.904
431.266
431.266
431.094
220.013
192
116
115
FT-0576F
7.6
11.7
7.6
11.7
A-A
210.005
alat 6....Ø10.5
alat 7....Ø5
Ø5
Ø10.5
A
44.2
30.8
2.3
5.1
5.9
5
5.8
21.2
4.1
9.3
49.7
4.1
13.6
0.8
3.7
84.5

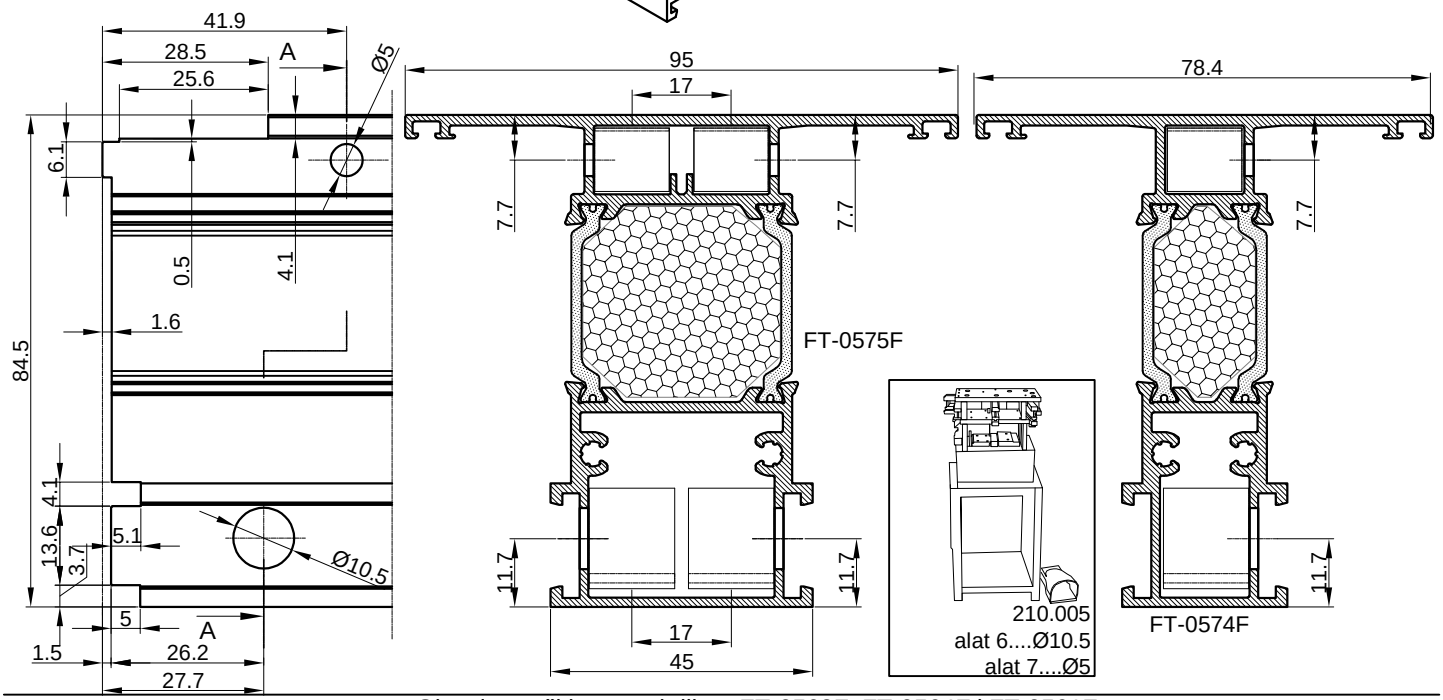

FT-0575F
Ø3
8.3
8.1
10°
433.004
710.079
710.066
431.342
710.066
431.342
433.004
710.079
431.904
431.266
FT-0576F
220.013
431.266
431.904
FT-0575F
192
116
FT-0576F
8.1
11.7
115
8.1
11.7
A-A
210.005
alat 6....Ø10.5
alat 7....Ø5
Ø5
Ø10.5
A
44.2
30.8
2.3
2.3
5.1
5.9
5
5.8
21.2
4.1
9.3
49.7
4.1
13.6
0.8
3.7
84.5


FT-0575F
Ø3
8.3
8.1
10°
433.004
710.066
431.342
710.066
431.342
710.079
710.079
431.266
431.904
FT-0575F
FT-0575F
431.266
431.904
220.013

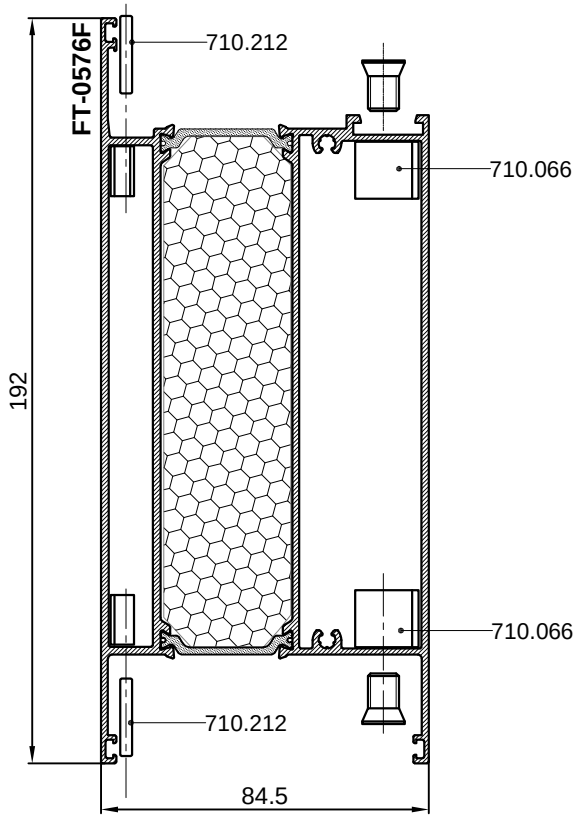

44.2
30.8
A
4.1
9.3
Ø5
2.3
84.5
49.7
4.1
13.6
5.9
5.1
Ø10.5
0.8
3.7
5
5.8
21.2
A

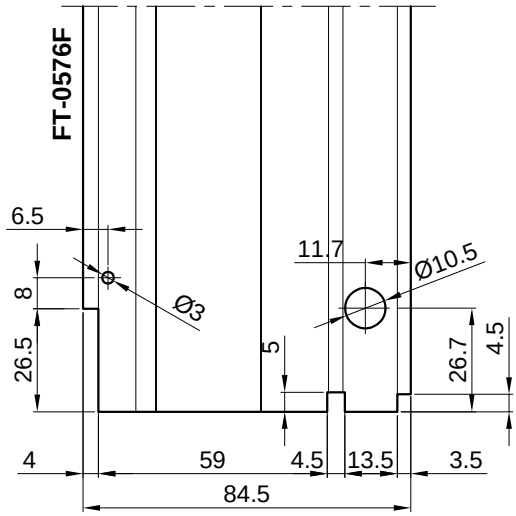

95
17
8.1
8.1
A-A
210.005
alat 6....Ø10.5
alat 7....Ø5
11.7
11.7
FT-0575F
17
45

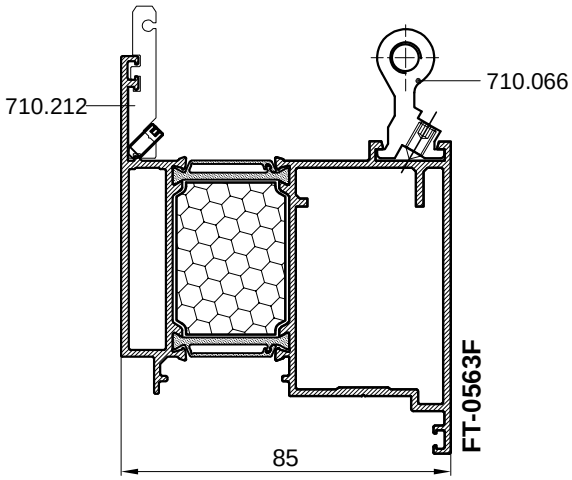

Ø3
8
8.2
10°
FT-0562F
(FT-0561F,
FT-0564F)
433.004
710.171
710.171
710.066
710.066
431.342
431.342
431.904
431.266
FT-0575F
FT-0562F
(FT-0561F,
FT-0564F)
710.066
710.171
431.342
431.904
431.266
431.904
431.266
FT-0574F
220.012


41.9
28.5
25.6
A
Ø5
6.1
0.5
4.1
1.6
84.5
4.1
13.6
3.7
5.1
Ø10.5
5
A
1.5
26.2
27.7
95
17
7.7
7.7
FT-0575F
11.7
11.7
17
45
78.4
7.7
11.7
FT-0574F
210.005
alat 6....Ø10.5
alat 7....Ø5

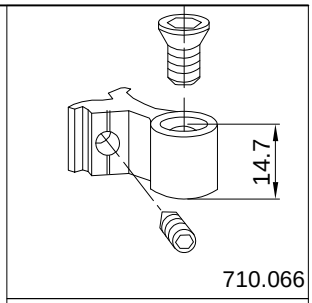
Obrada parapetne prečke FT-0576F
Processing of transom FT-0576F

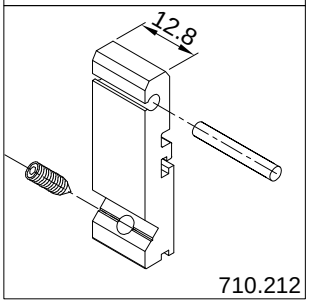


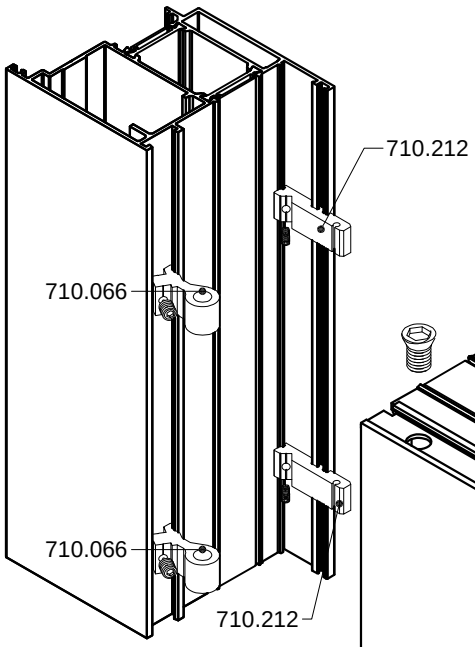


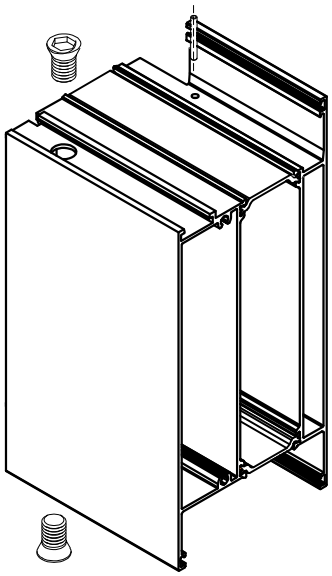


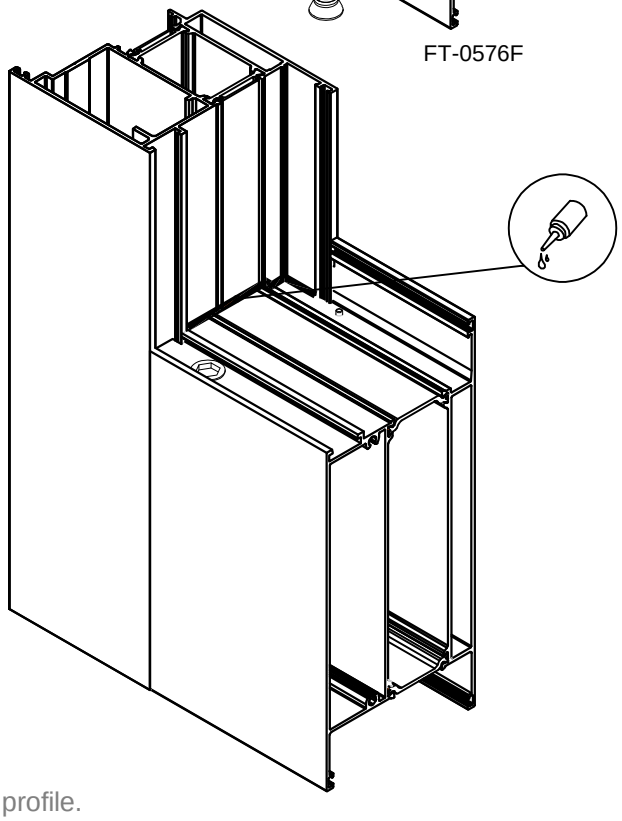
Obrada parapetne prečke FT-0576F prema profilu krila FT-0563F (za bravu 45 mm)
Processing of transom FT-0576F according to sash profile FT-0563F (for lock 45 mm)



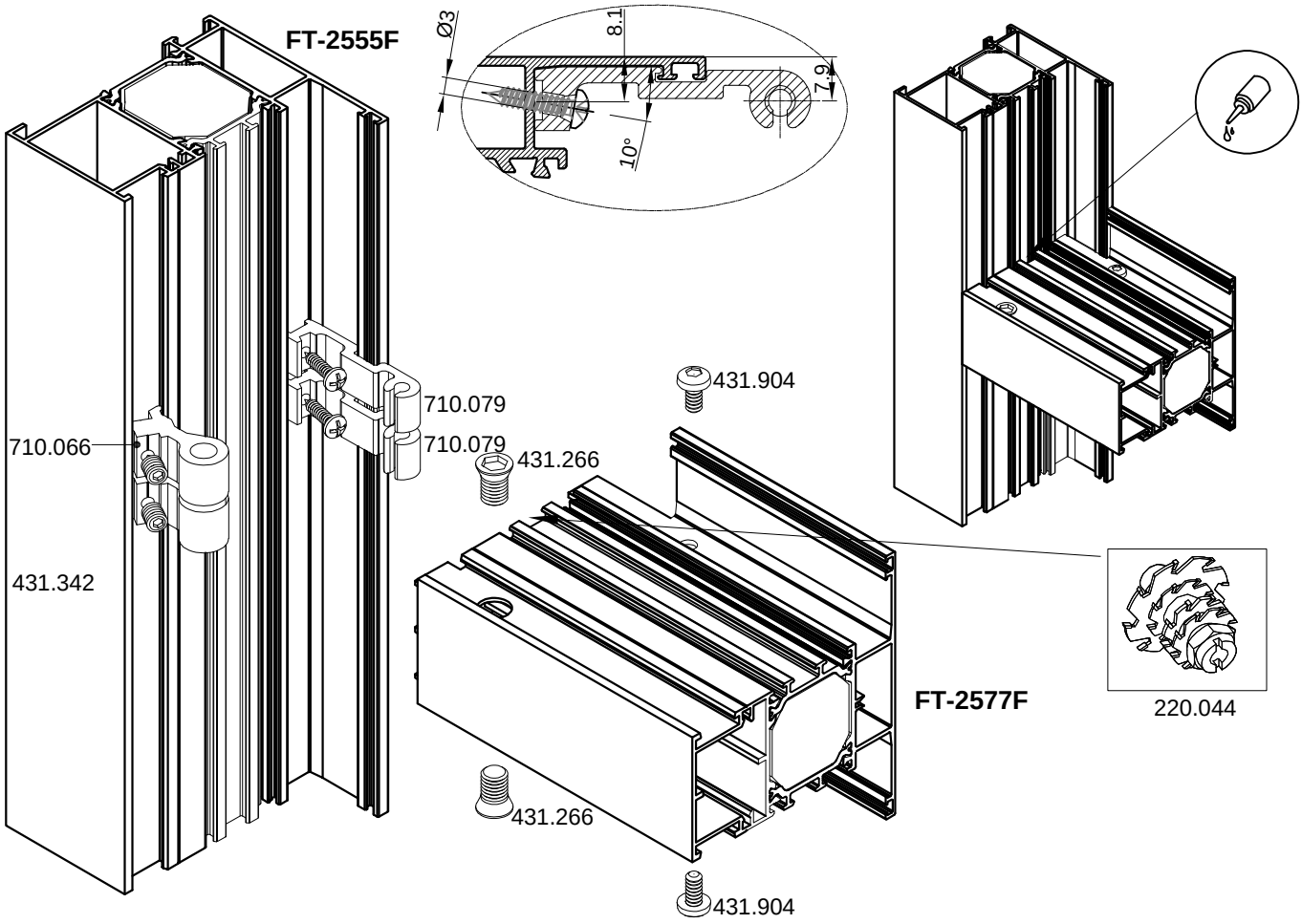


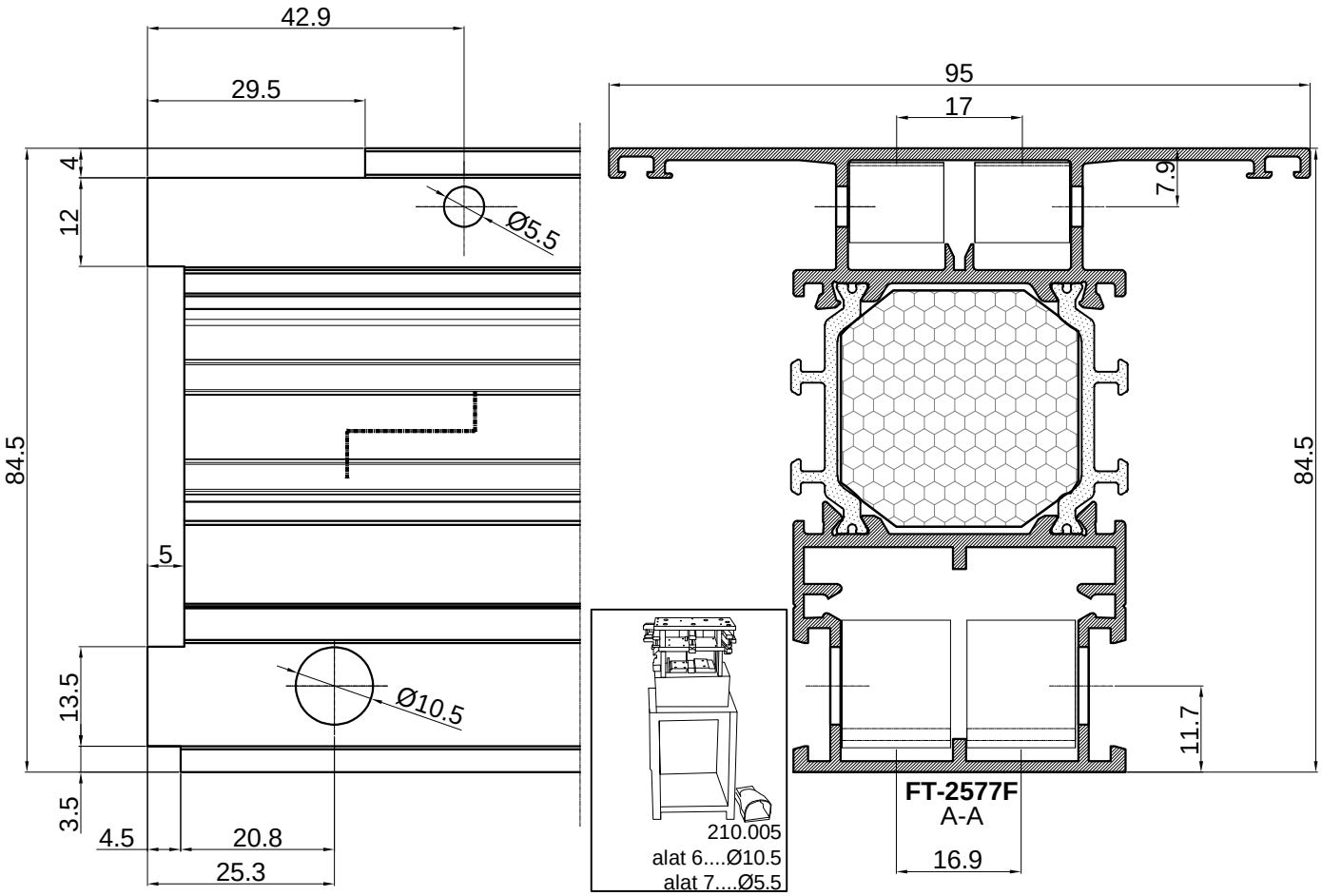


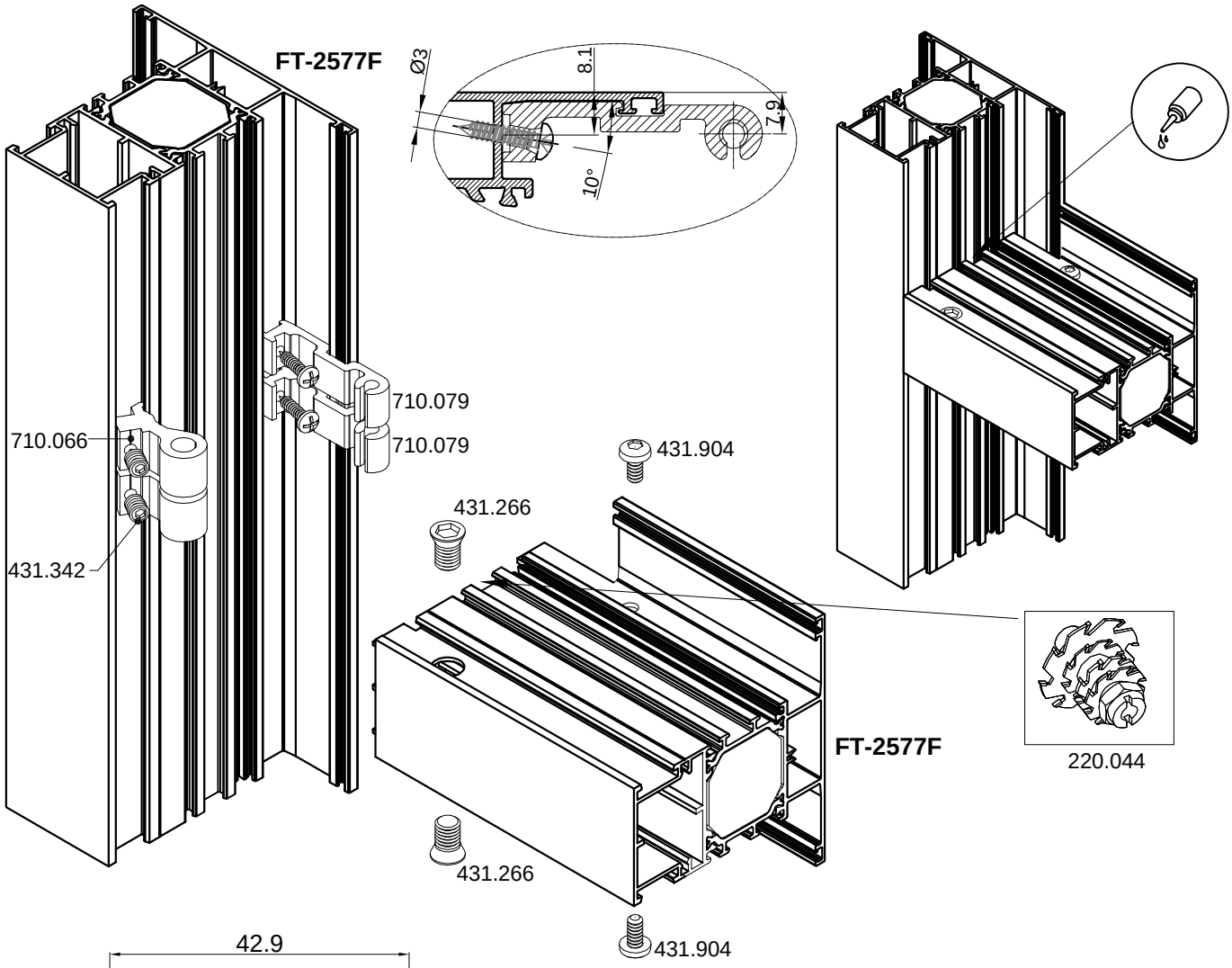


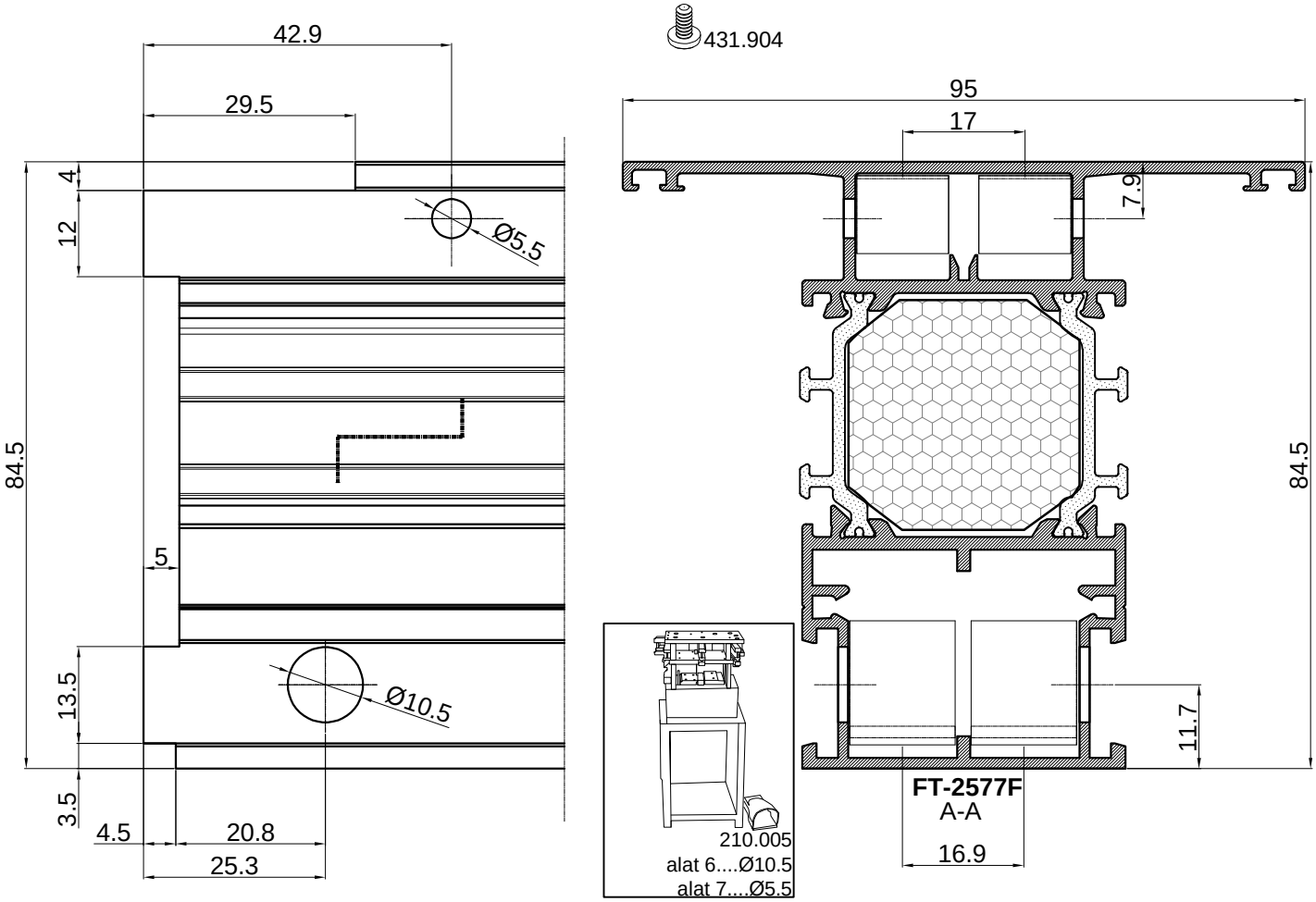


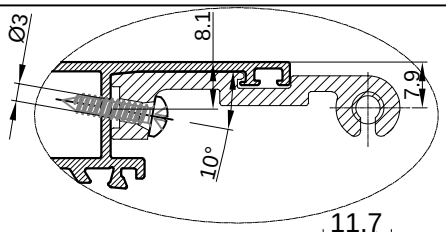
Napomena: Obrada je ista i za profil prečke FT-0575F.
Note: The processing is the same for the FT-0575F transom profile.


FT-2555F
Ø3
8.1
7.9
10°
3°
710.066
710.079
710.079
431.904
431.266
431.342
431.266
431.904
FT-2577F
220.044

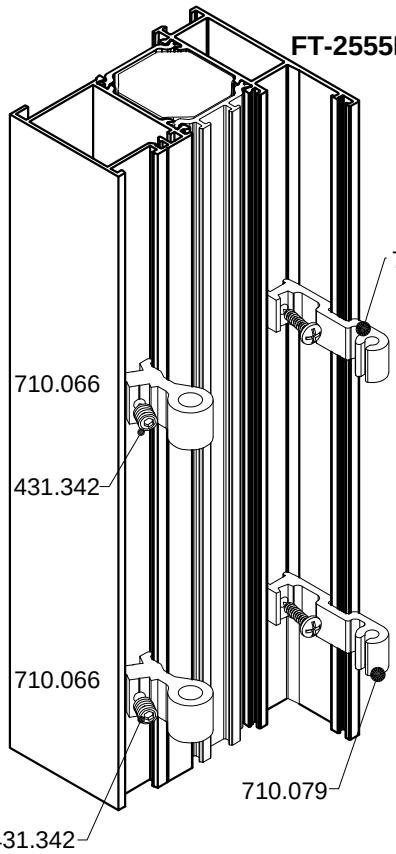

42.9
29.5
4
12
Ø5.5
84.5
5
13.5
Ø10.5
3.5
4.5
20.8
25.3
95
17
7.9
84.5
11.7
16.9
FT-2577F
A-A
210.005
alat 6....Ø10.5
alat 7....Ø5.5

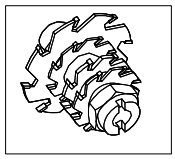

FT-2577F
Ø3
8.1
7.9
10°
710.079
710.066
710.079
431.904
431.266
431.342
FT-2577F
220.044
431.266
431.904

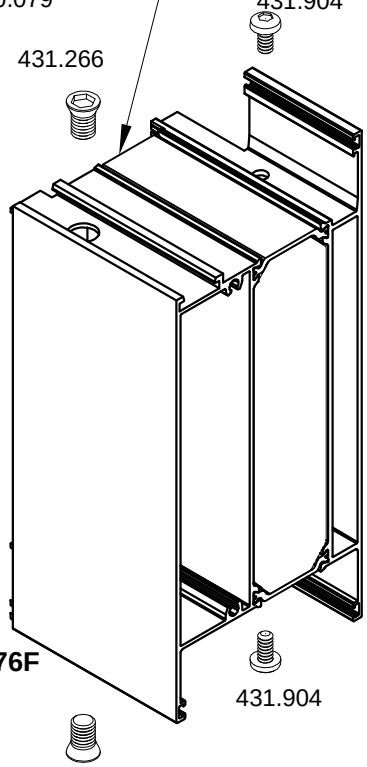

42.9
29.5
4
12
Ø5.5
84.5
5
13.5
Ø10.5
3.5
4.5
20.8
25.3
95
17
7.9
84.5
11.7
FT-2577F
A-A
16.9
210.005
alat 6....Ø10.5
alat 7....Ø5.5

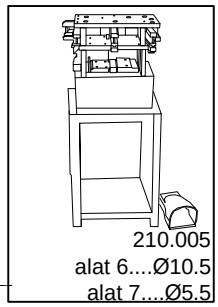

Ø3
8.1
7.9
10°

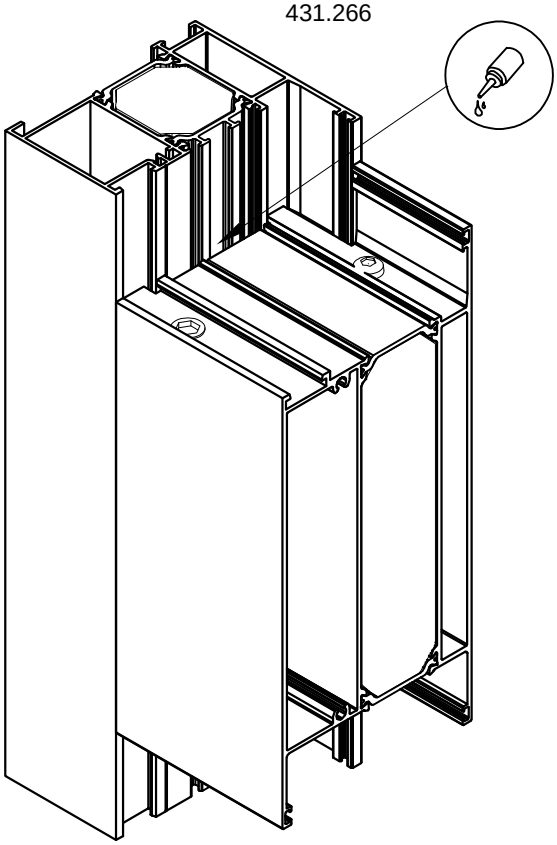
7.9
11.7
192
116
FT-0576F
115.3
A-A
7.9
11.7

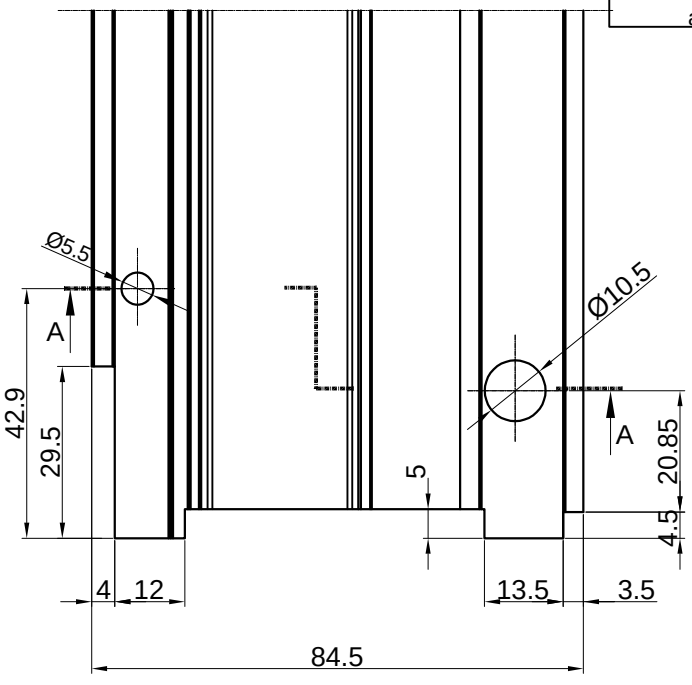

FT-2555F
710.079
710.066
431.342
710.066
710.079
431.342

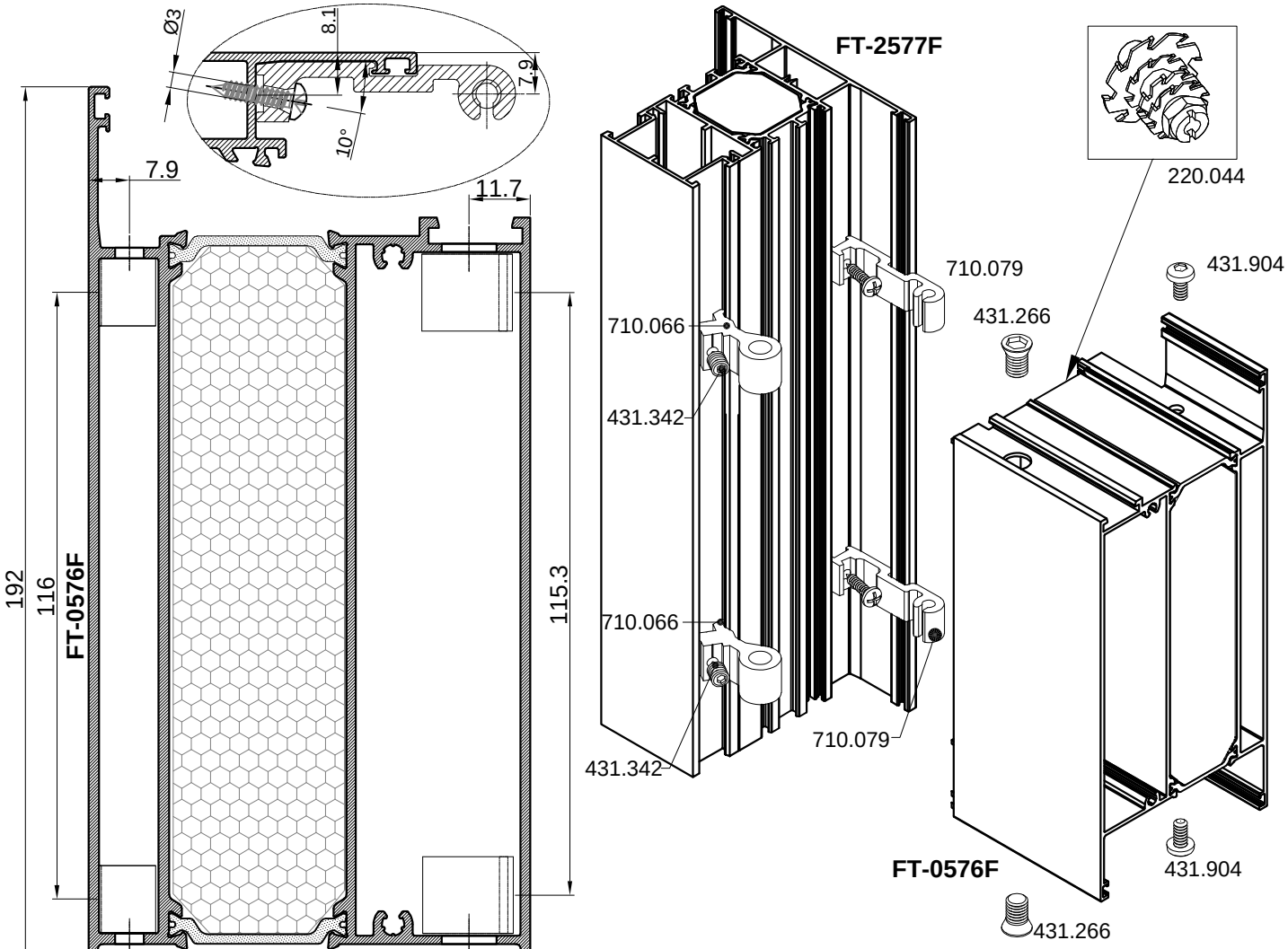

220.044

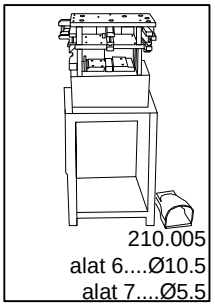

431.904
431.266
FT-0576F
431.904
431.266

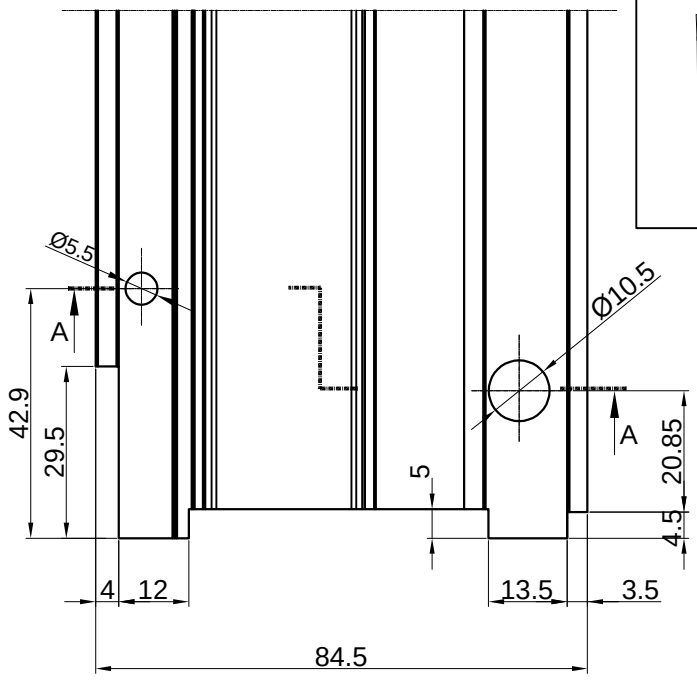

210.005
alat 6....Ø10.5
alat 7....Ø5.5

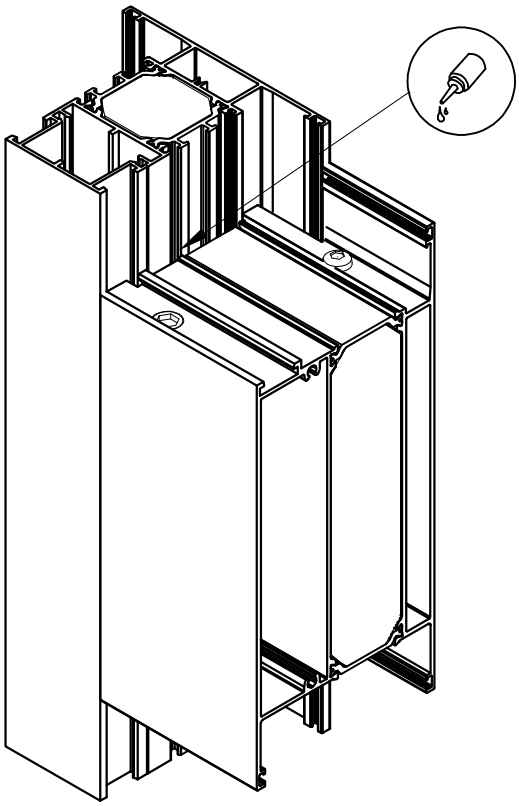


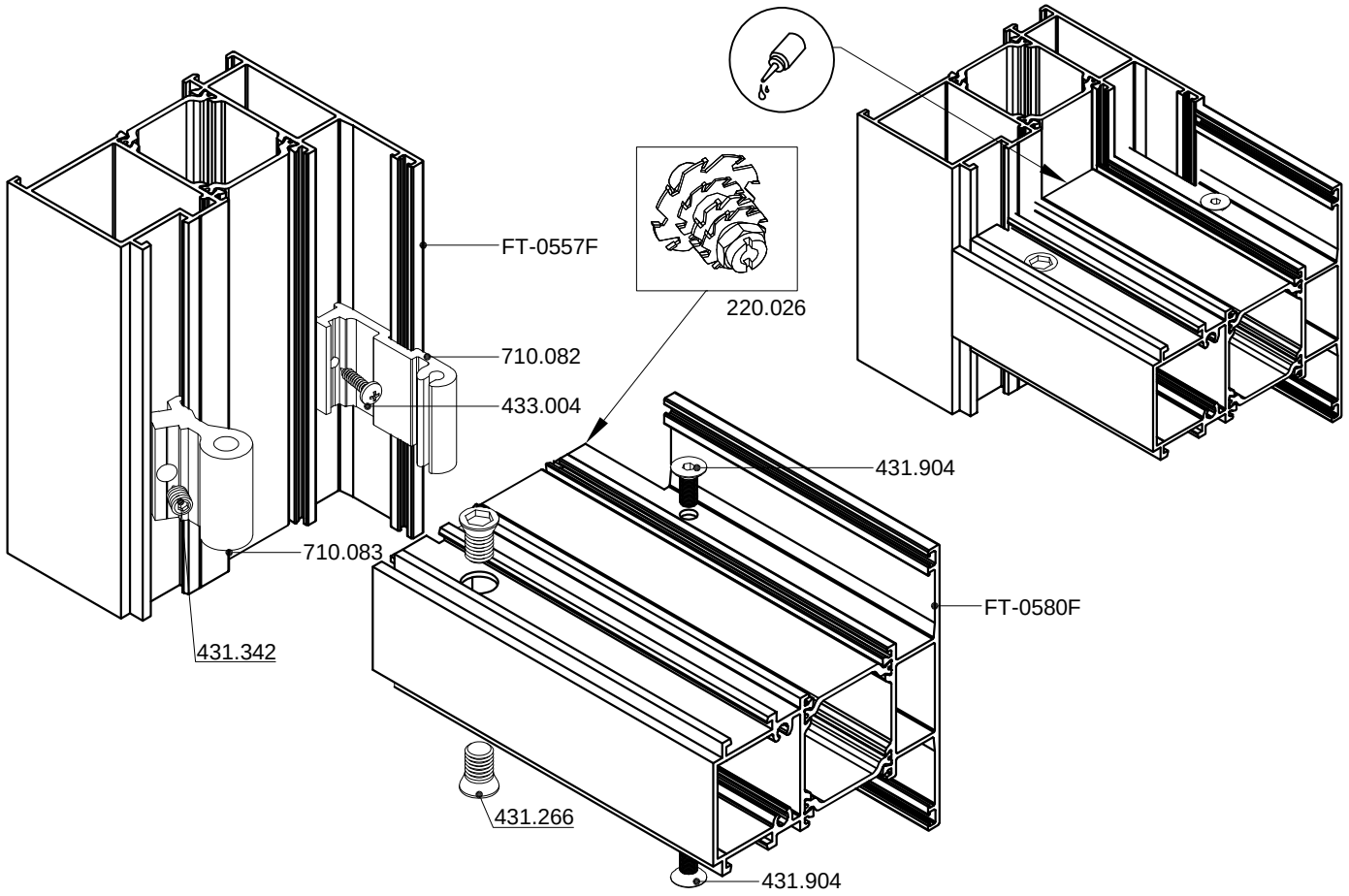

Ø5.5
A
Ø10.5
A
42.9
29.5
5
20.85
4.5
4
12
13.5
3.5
84.5

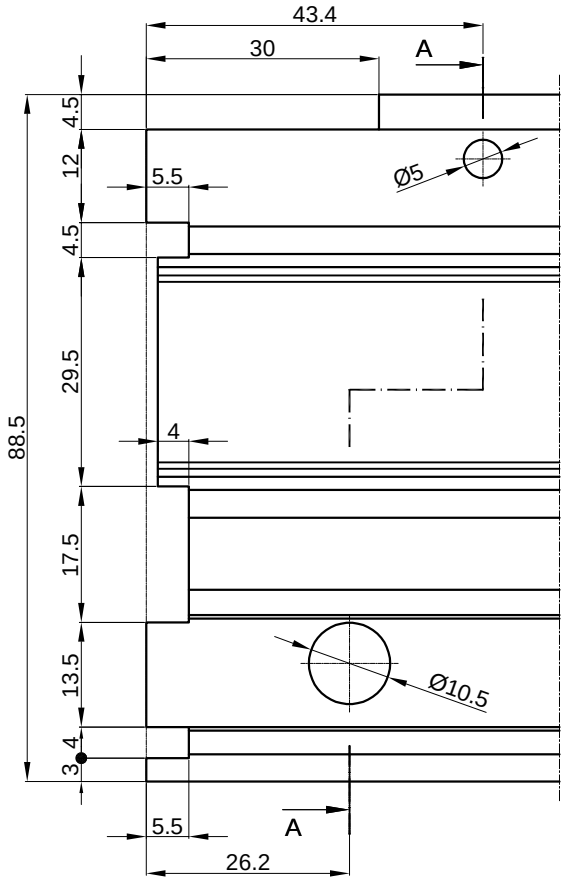

Ø3
8.1
7.9
10°
7.9
11.7
192
116
FT-0576F
115.3
A-A
7.9
11.7
FT-2577F
710.079
710.066
431.342
710.066
710.079
431.342
220.044
431.904
431.266
FT-0576F
431.904
431.266

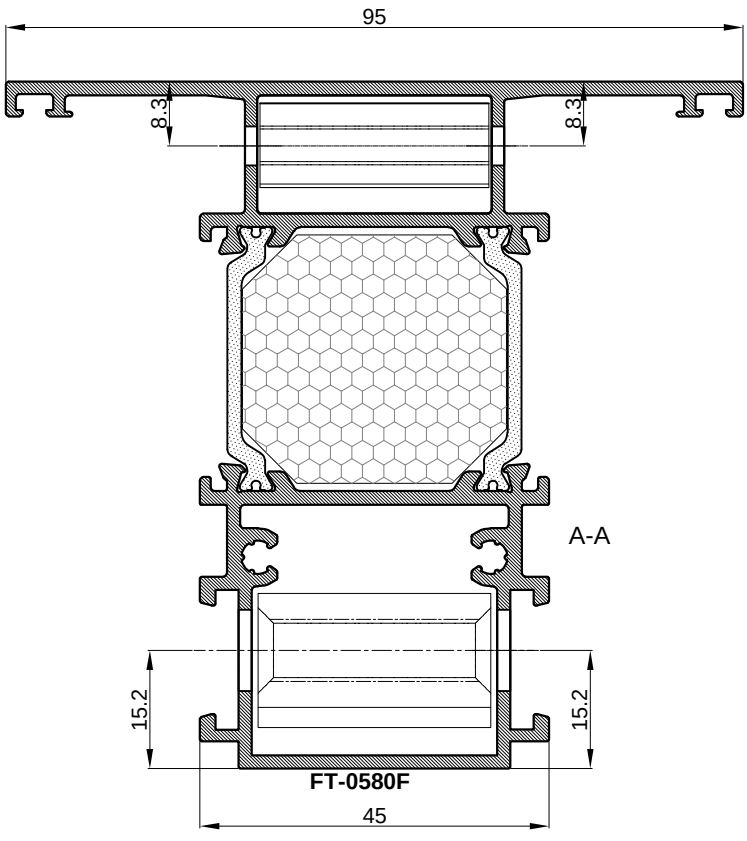

210.005
alat 6....Ø10.5
alat 7....Ø5.5

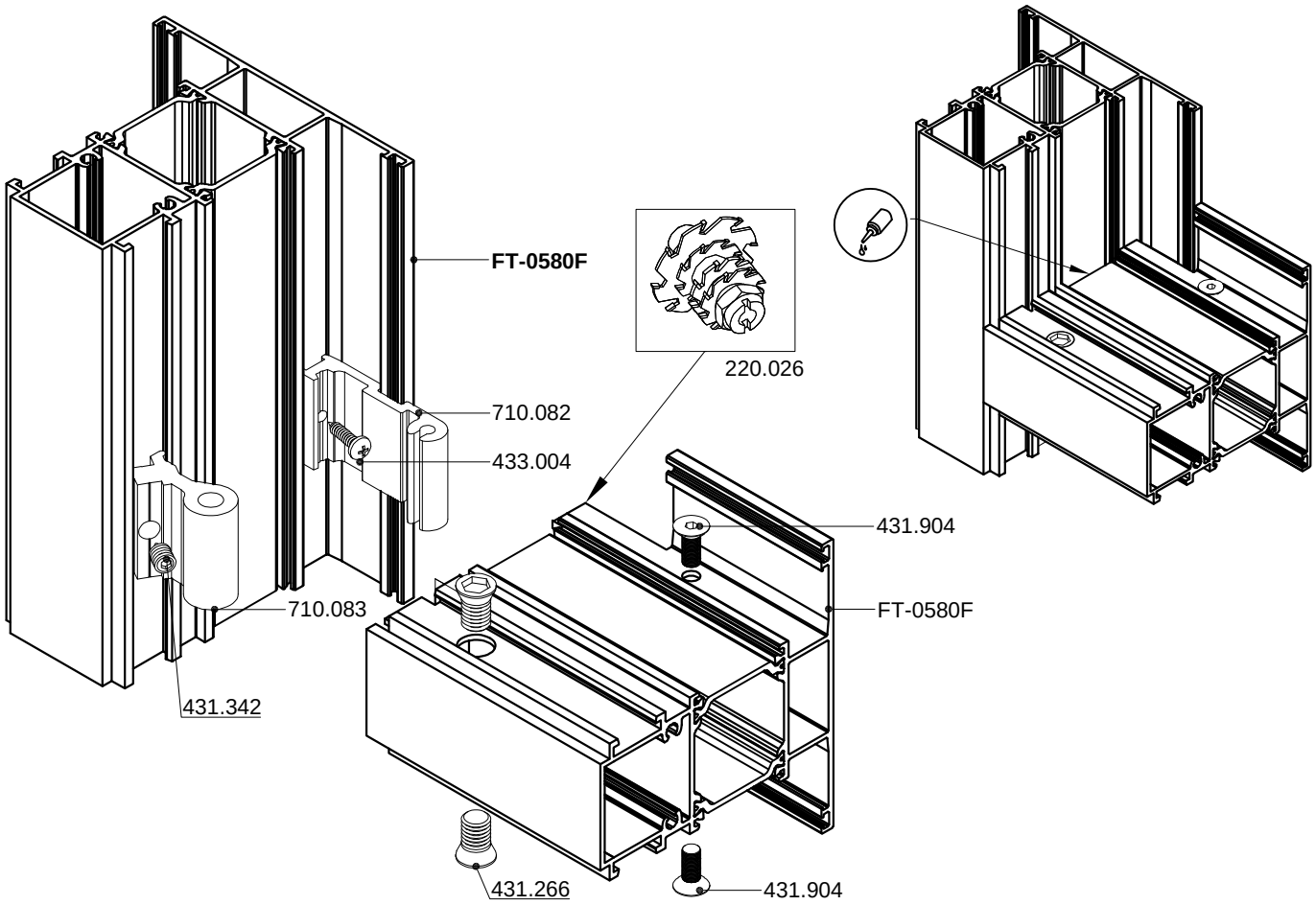

Ø5.5
A
42.9
29.5
Ø10.5
A
20.85
5
4.5
4
12
13.5
3.5
84.5

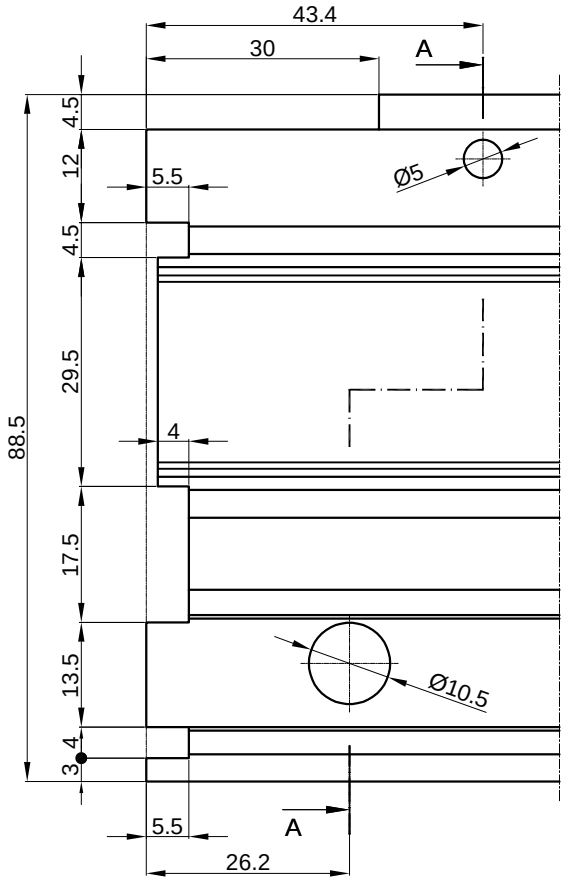


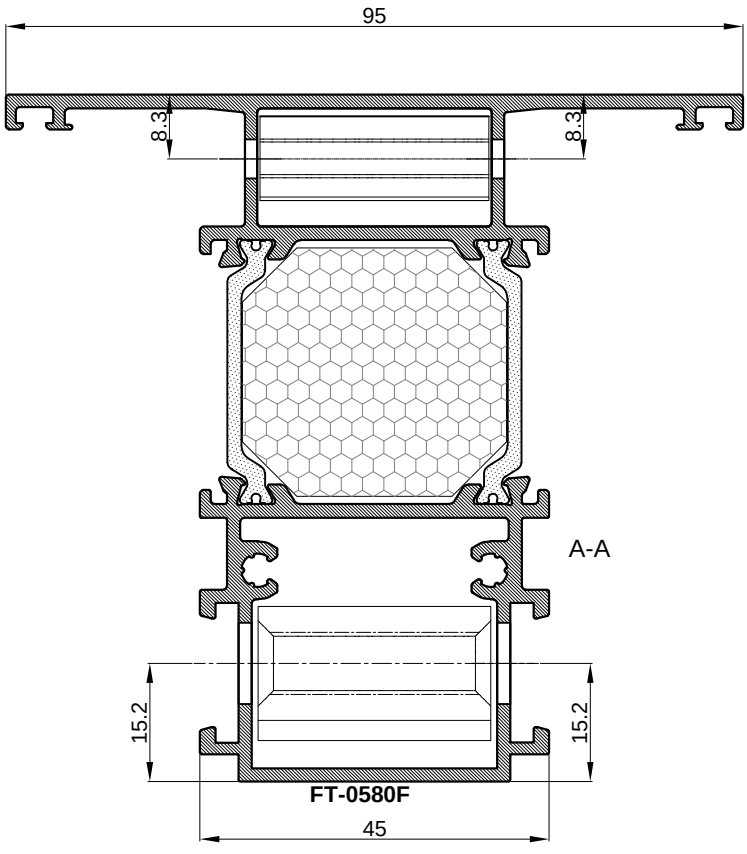

FT-0557F
710.082
433.004
710.083
431.342
220.026
431.904
FT-0580F
431.266
431.904

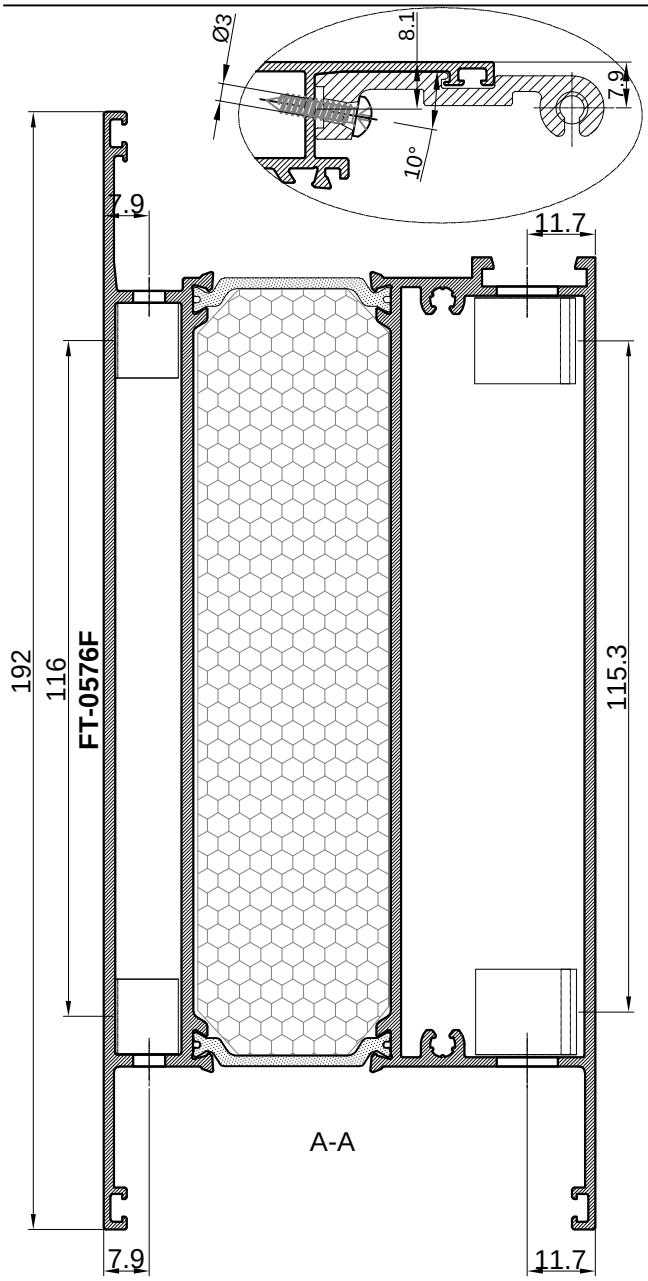

43.4
30
A
4.5
12
5.5
Ø5
4.5
29.5
88.5
4
17.5
13.5
Ø10.5
3
4
5.5
A
26.2

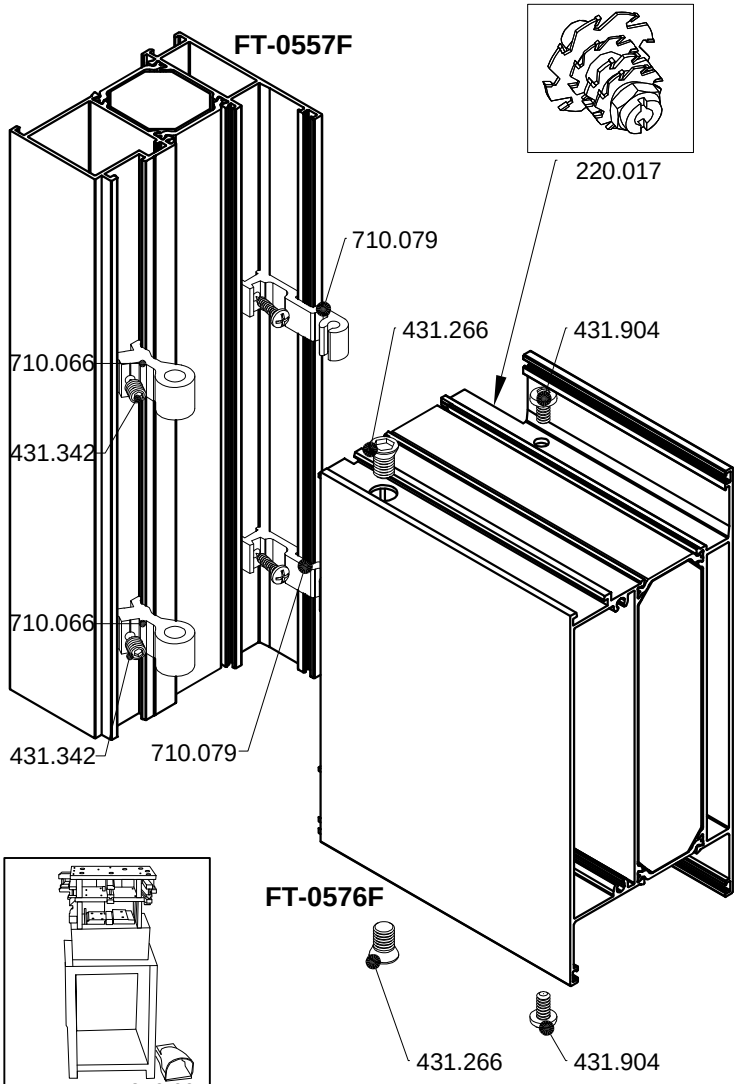

95
8.3
8.3
A-A
15.2
15.2
FT-0580F
45


FT-0580F
220.026
710.082
433.004
431.904
710.083
FT-0580F
431.342
431.266
431.904

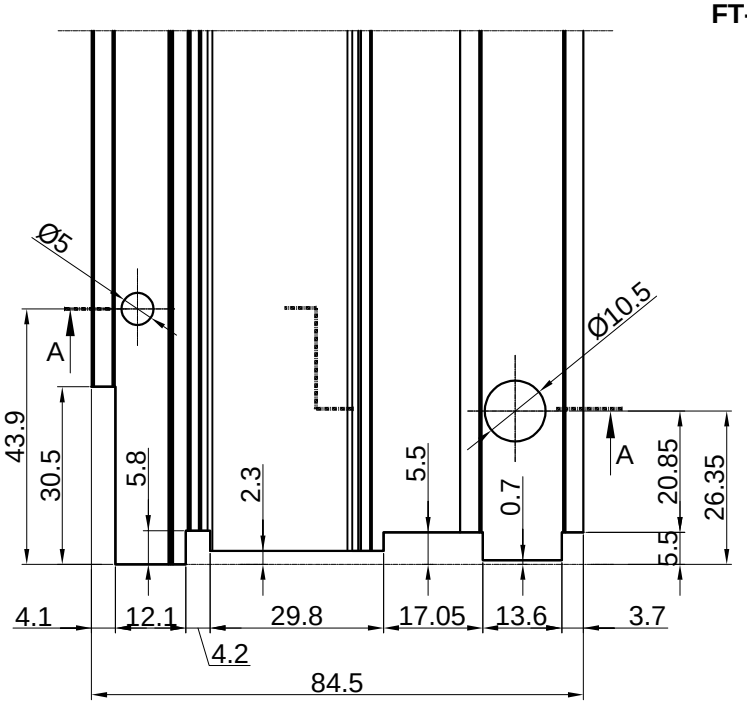

43.4
30
A
4.5
12
5.5
Ø5
4.5
29.5
88.5
4
17.5
13.5
Ø10.5
3
4
5.5
A
26.2

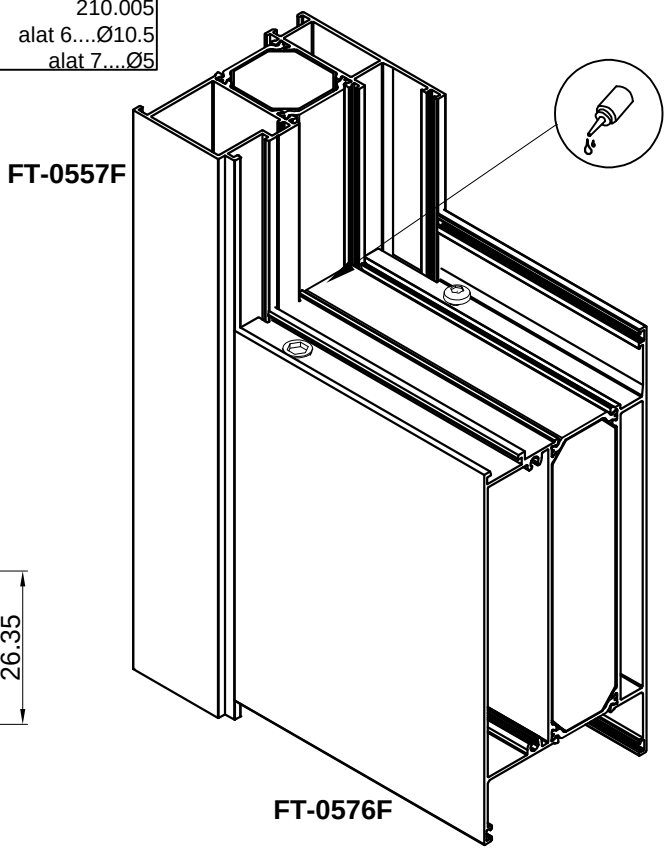

95
8.3
8.3
A-A
15.2
15.2
FT-0580F
45

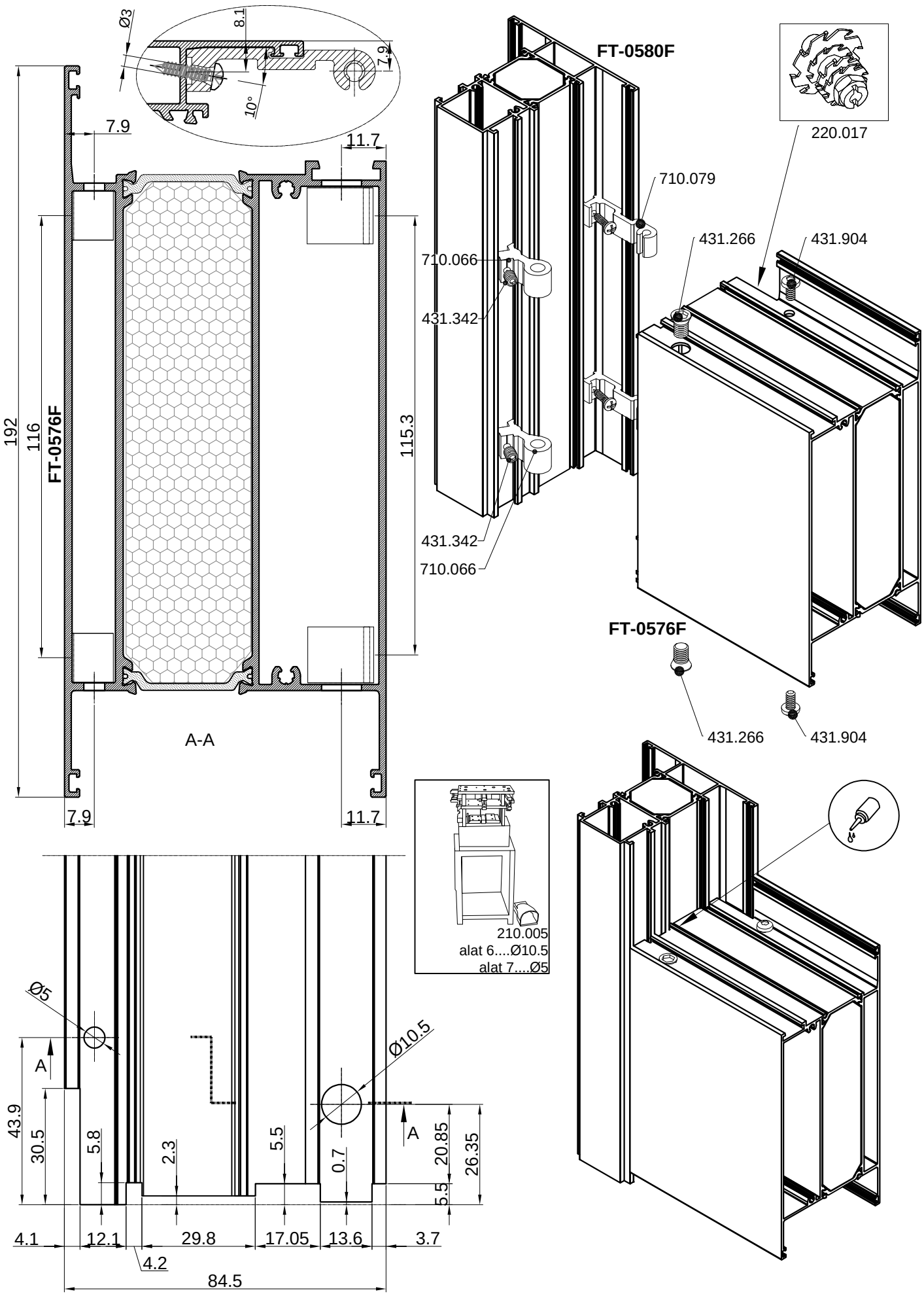

Ø3
8.1
7.9
10°
7.9
11.7
192
116
FT-0576F
115.3
A-A
7.9
11.7

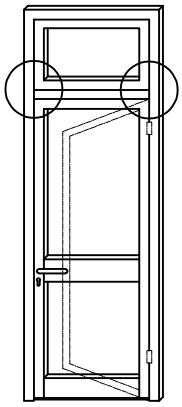

FT-0557F
220.017
710.079
710.066
431.342
431.266
431.904
710.066
431.342
710.079
FT-0576F
431.266
431.904

210.005
alat 6....Ø10.5
alat 7....Ø5


Ø5
A
Ø10.5
A
43.9
30.5
5.8
2.3
5.5
0.7
20.85
26.35
5.5
4.1
12.1
29.8
17.05
13.6
3.7
4.2
84.5


FT-0557F
FT-0576F

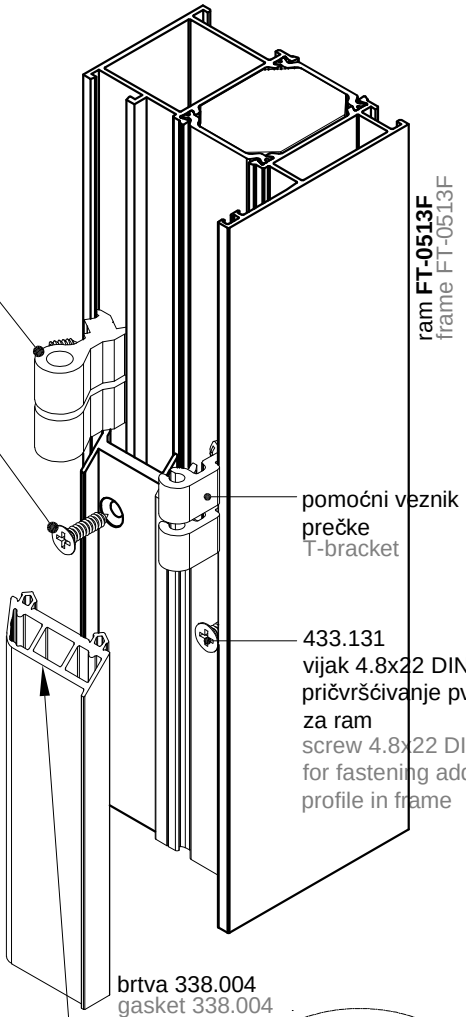

Ø3
8.1
7.9
10°
7.9
11.7
192
116
FT-0576F
115.3
A-A
7.9
11.7
FT-0580F
710.079
710.066
431.342
431.342
710.066
220.017
431.266
431.904
FT-0576F
431.266
431.904
210.005
alat 6....Ø10.5
alat 7....Ø5
Ø5
Ø10.5
A
A
43.9
30.5
5.8
2.3
5.5
0.7
20.85
26.35
5.5
4.1
12.1
29.8
17.05
13.6
3.7
4.2
84.5

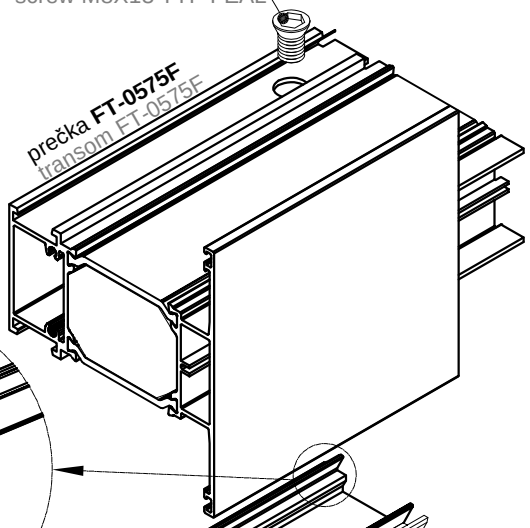


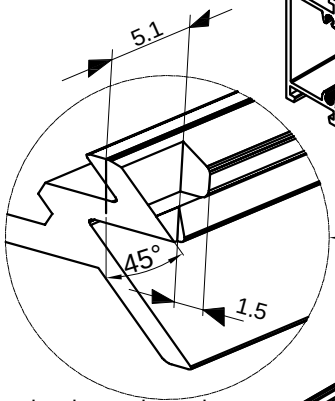
veznik prečke
T-bracket

433.130
vijak 4.8x19 DIN 7982 za pričvršćivanje F-1222 za ram
screw 4.8x19 DIN 7982 for fastening profile F-1222 on frame

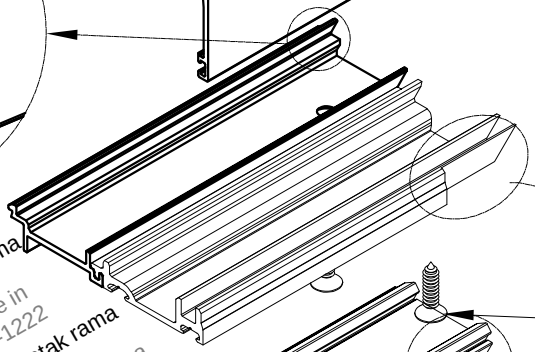
431.266
vijak M8X13 TIP FEAL
screw M8X13 TYP FEAL



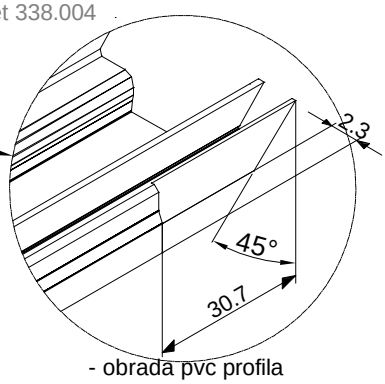




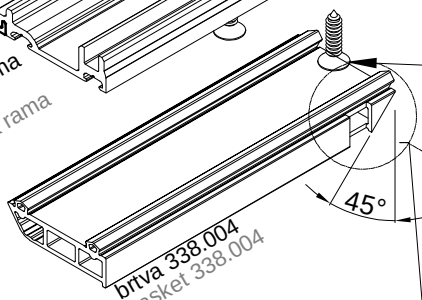
- obrada na al umetku rama F-1222-
- processing on add. profile on frame F-1222-

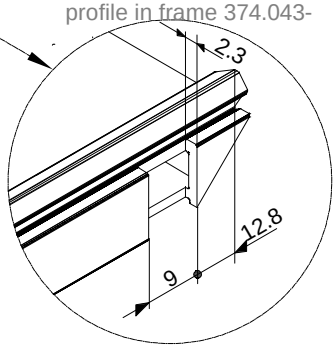


brtva 338.004
gasket 338.004

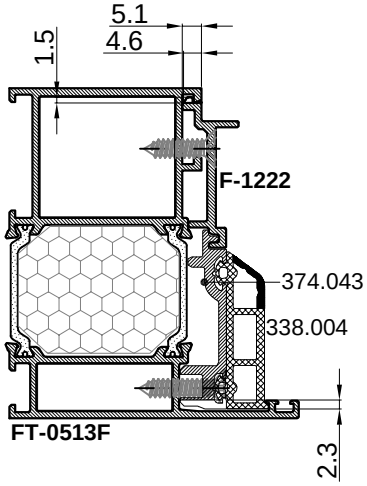


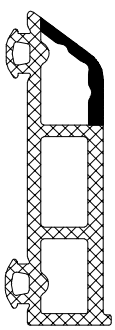
- obrada pvc profila umetka rama 374.043-
- processing additional pvc profile in frame 374.043-

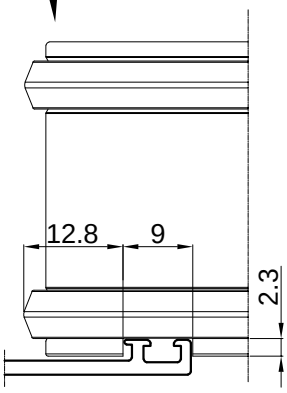


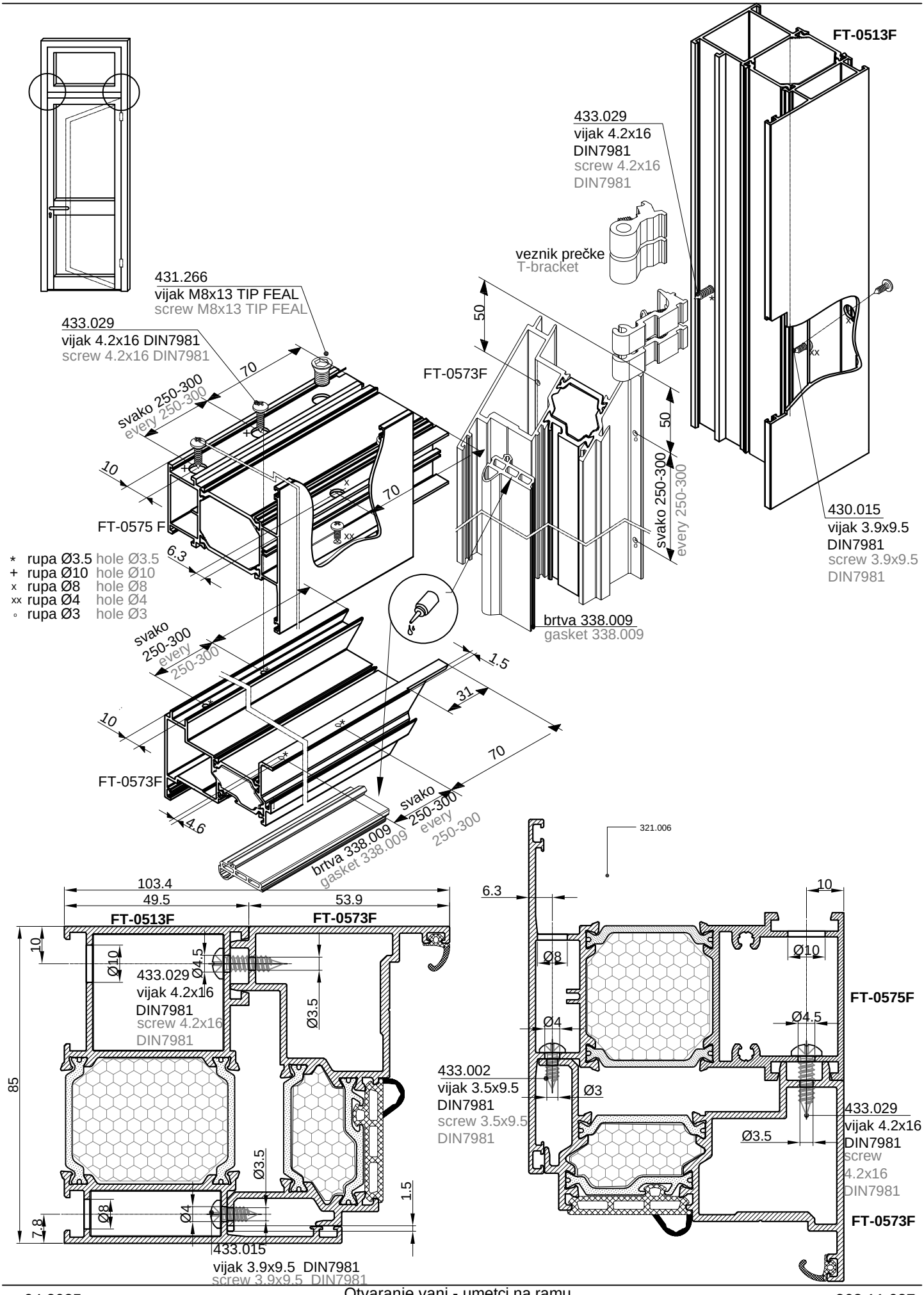


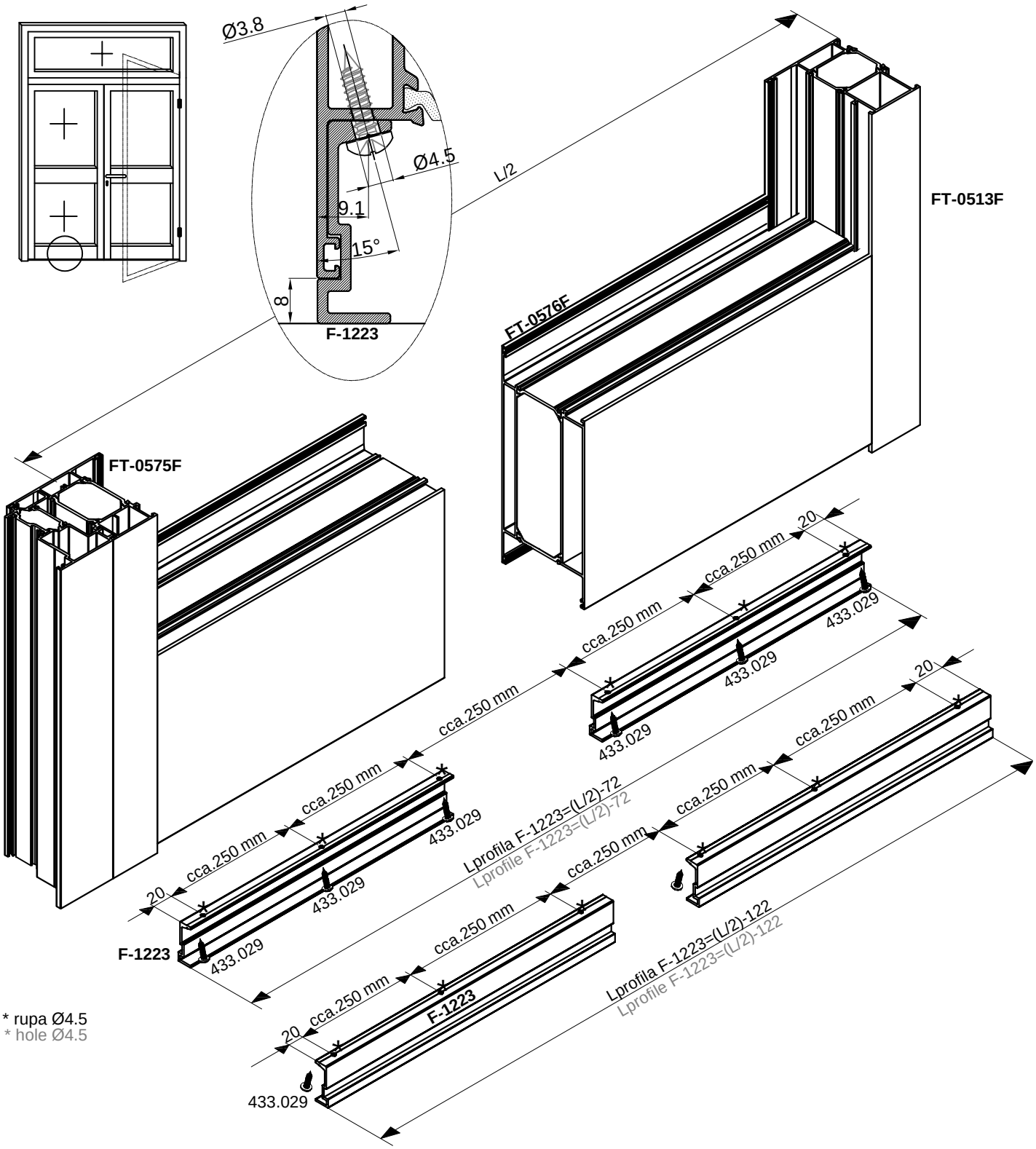
- obrada na centralnoj brtvi 338.004-
- processing on central gasket 338.004-



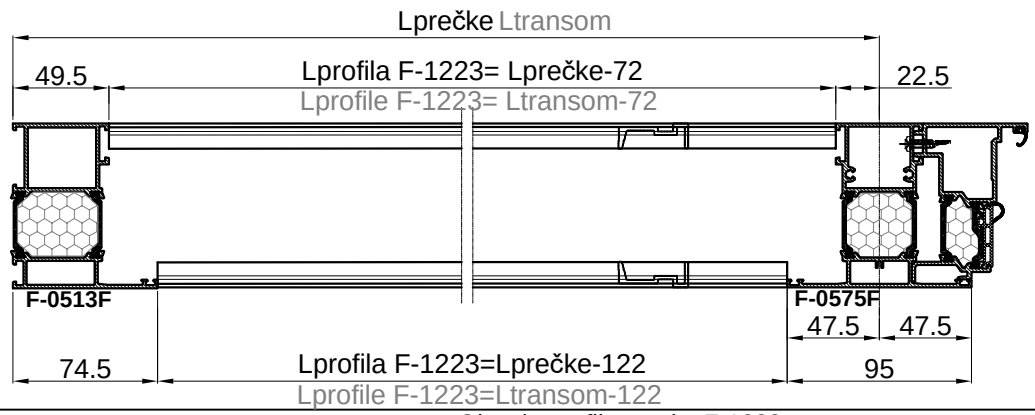


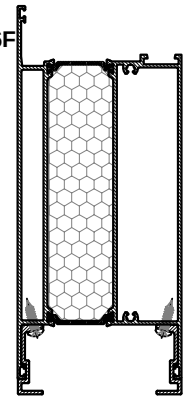


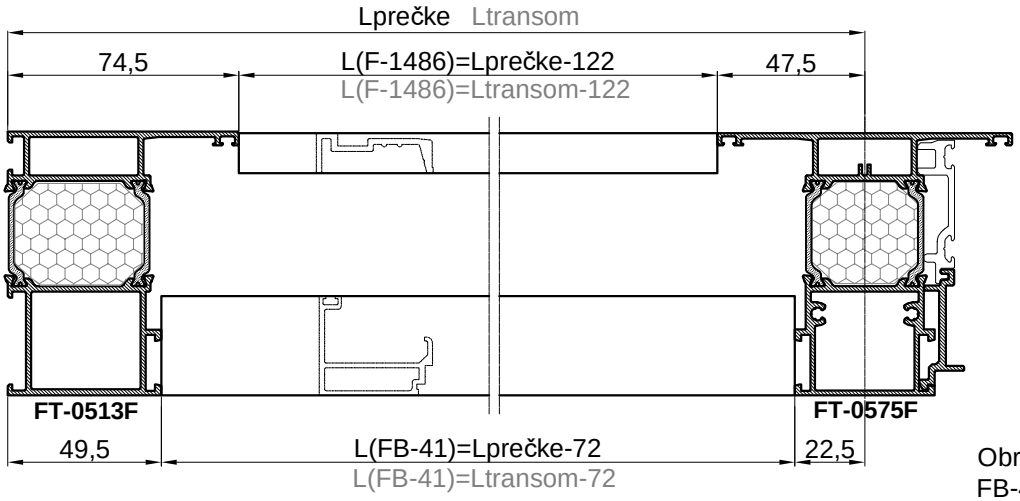

FT-0513F
433.029
vijak 4.2x16
DIN7981
screw 4.2x16
DIN7981
veznik prečke
T-bracket
431.266
vijak M8x13 TIP FEAL
screw M8x13 TIP FEAL
433.029
vijak 4.2x16 DIN7981
screw 4.2x16 DIN7981
70
svako 250-300
every 250-300
10
FT-0575 F
6.3
50
FT-0573F
50
svako 250-300
every 250-300
430.015
vijak 3.9x9.5
DIN7981
screw 3.9x9.5
DIN7981
* rupa Ø3.5 hole Ø3.5
+ rupa Ø10 hole Ø10
x rupa Ø8 hole Ø8
xx rupa Ø4 hole Ø4
◦ rupa Ø3 hole Ø3
brtva 338.009
gasket 338.009
svako 250-300 every 250-300
1.5
31
10
70
FT-0573F
4.6
brtva 338.009
gasket 338.009
svako 250-300 every 250-300
321.006
103.4
49.5
53.9
FT-0513F
FT-0573F
10
Ø10
433.029
vijak 4.2x16
DIN7981
screw 4.2x16
DIN7981
Ø4.5
Ø3.5
85
Ø3.5
1.5
Ø8
Ø4
7.8
433.015
vijak 3.9x9.5 DIN7981
screw 3.9x9.5 DIN7981
6.3
10
Ø8
Ø10
Ø4
Ø4.5
FT-0575F
433.002
vijak 3.5x9.5
DIN7981
screw 3.5x9.5
DIN7981
Ø3
Ø3.5
433.029
vijak 4.2x16
DIN7981
screw
4.2x16
DIN7981
FT-0573F

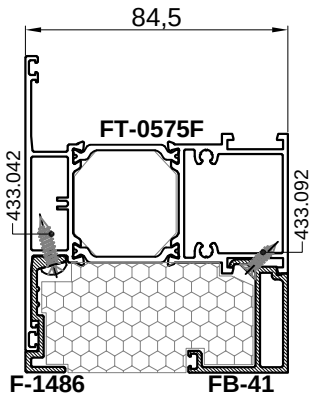


* rupa Ø4.5
* hole Ø4.5

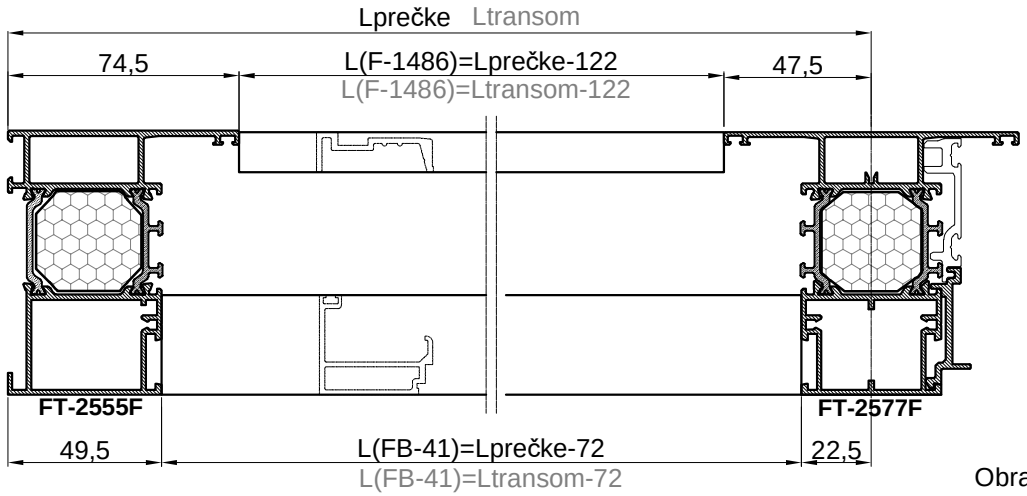


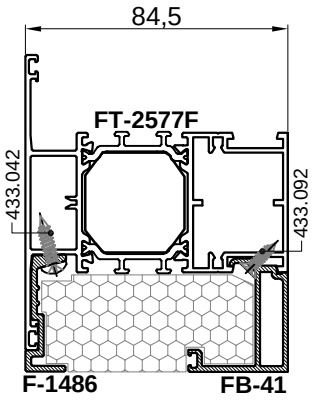




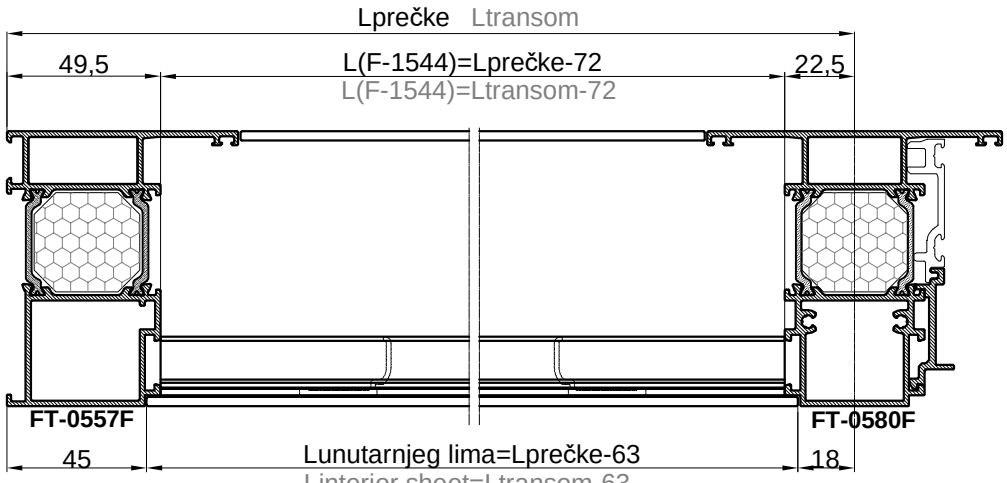


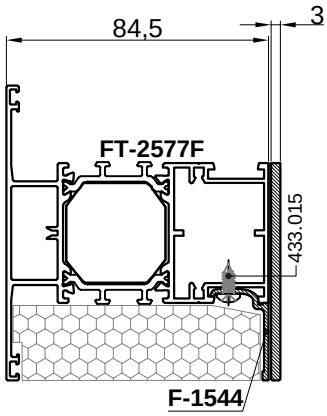
Obrada dodatnih profila F-1486 i FB-41 u parapetnoj prečki FT-0575F
Processing additional profiles F-1486 and FB-41 in transom-bottom fixed profile FT-0575F



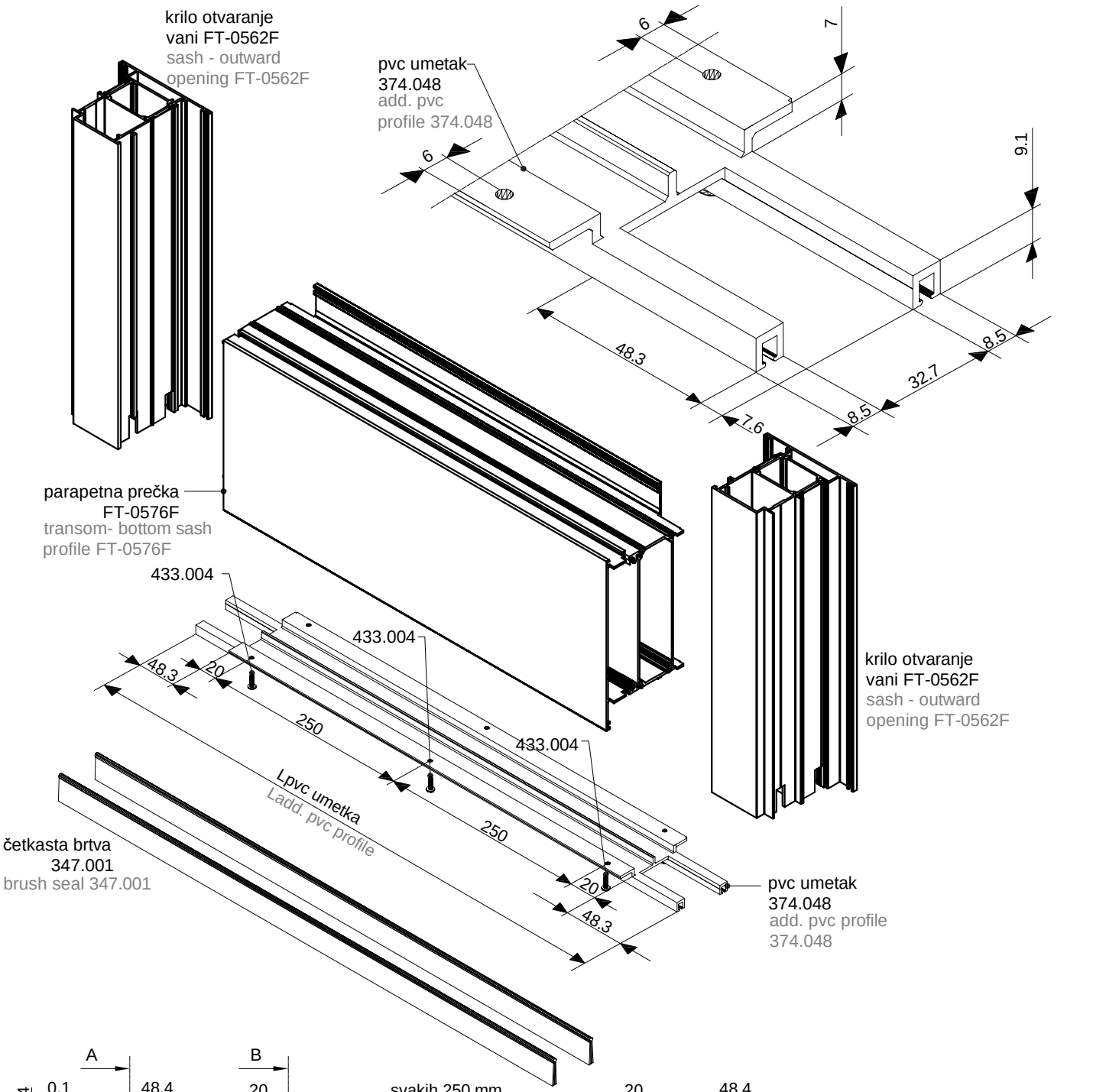


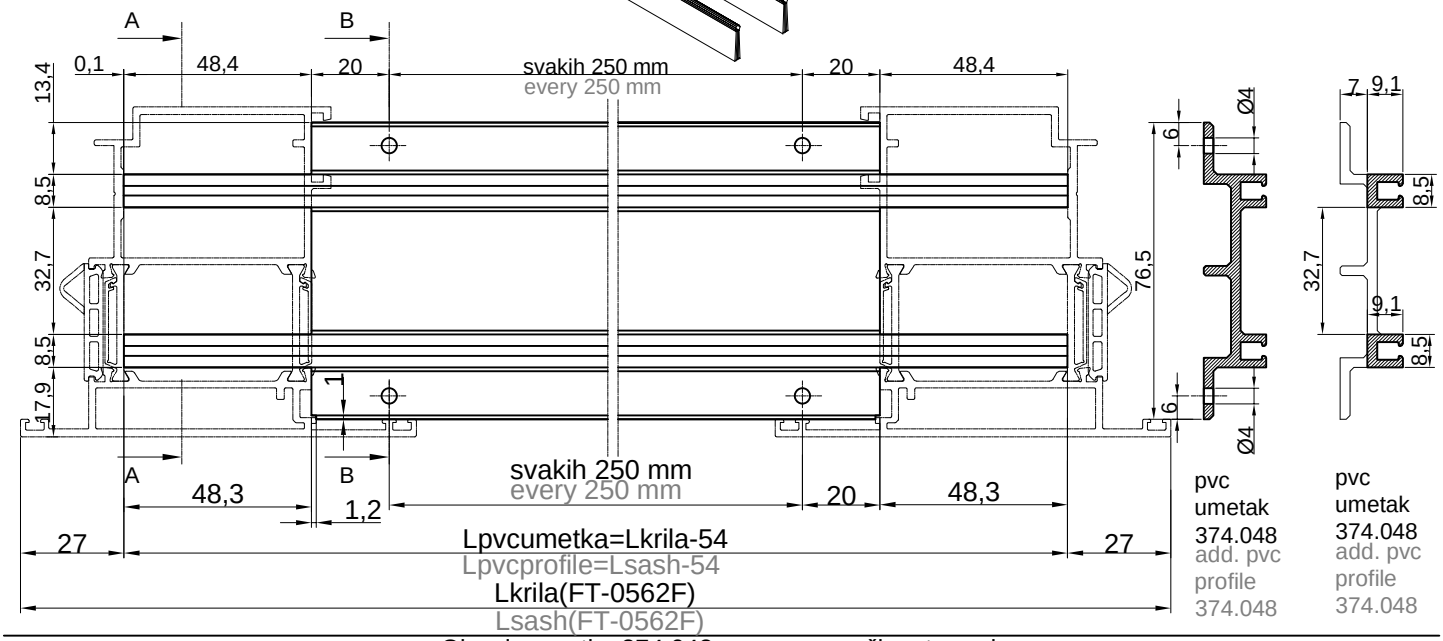
Obrada dodatnih profila F-1486 i FB-41 u parapetnoj prečki FT-2577F
Processing additional profiles F-1486 and FB-41 in transom-bottom fixed profile FT-2577F

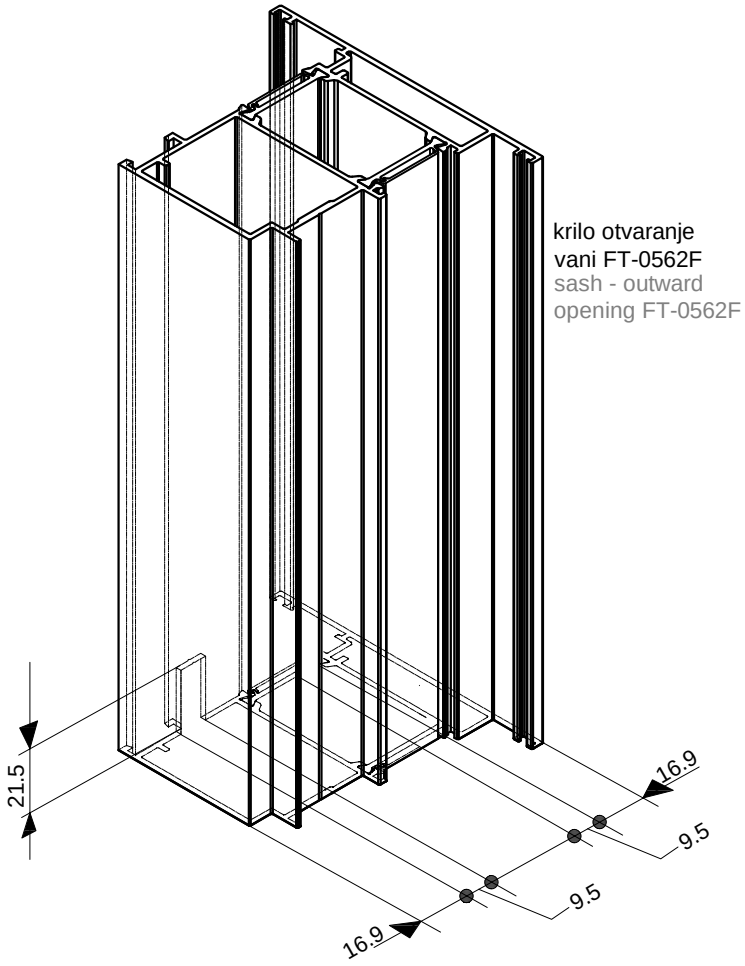




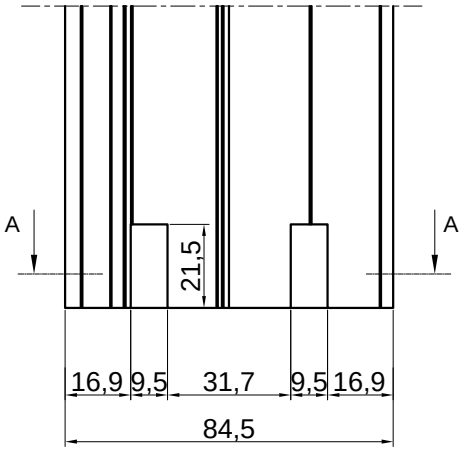
Obrada dodatnog profila F-1544 u parapetnoj prečki FT-2577F
Processing additional profile F-1544 in transom-bottom fixed profile FT-2577F

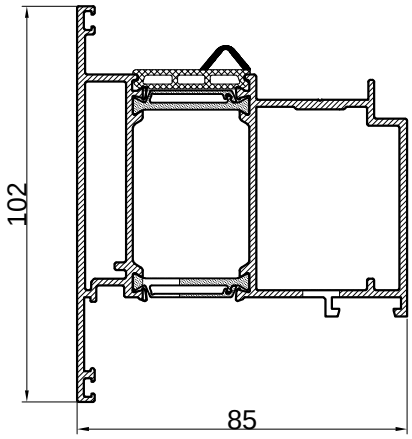

krilo otvaranje
vani FT-0562F
sash - outward
opening FT-0562F
pvc umetak
374.048
add. pvc
profile 374.048
6
7
9.1
48.3
8.5
32.7
8.5
7.6
parapetna prečka
FT-0576F
transom- bottom sash
profile FT-0576F
433.004
433.004
48.3
20
250
433.004
Lpvc umetka
Ladd. pvc profile
250
20
48.3
krilo otvaranje
vani FT-0562F
sash - outward
opening FT-0562F
četkasta brtva
347.001
brush seal 347.001
pvc umetak
374.048
add. pvc profile
374.048


A
B
0,1
48,4
20
svakih 250 mm
every 250 mm
20
48,4
13,4
8,5
32,7
8,5
17,9
1
6
Ø4
76,5
6
Ø4
7
9,1
8,5
32,7
9,1
8,5
A
B
48,3
1,2
svakih 250 mm
every 250 mm
20
48,3
27
Lpvcumetka=Lkrila-54
Lpvcprofile=Lsash-54
Lkrila(FT-0562F)
Lsash(FT-0562F)
27
pvc
umetak
374.048
add. pvc
profile
374.048
pvc
umetak
374.048
add. pvc
profile
374.048



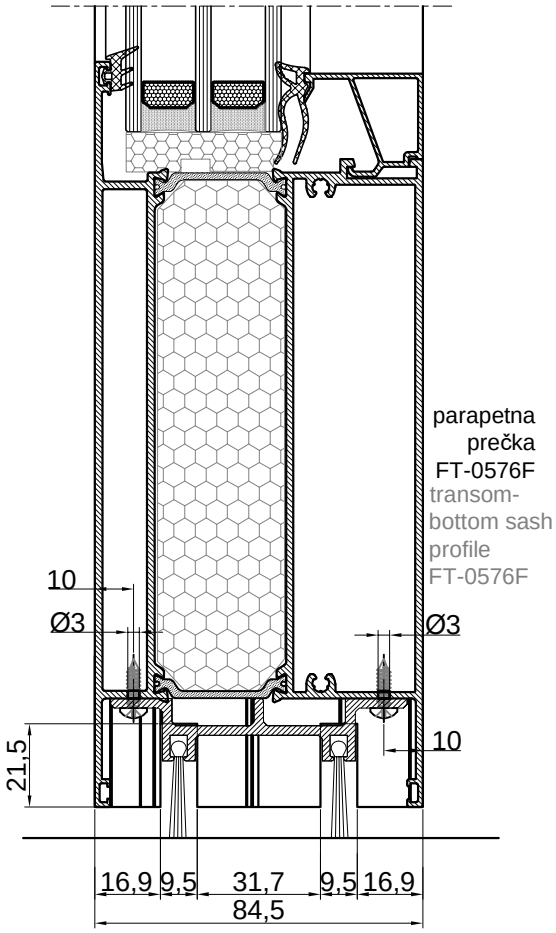
krilo otvaranje
vani FT-0562F
sash - outward
opening FT-0562F





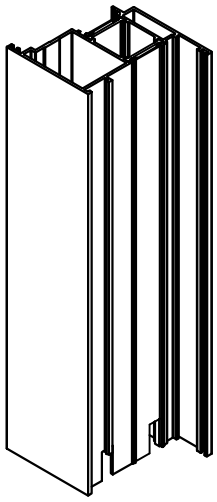
krilo otvaranje
vani FT-0562F
sash - outward
opening FT-0562F

A-A

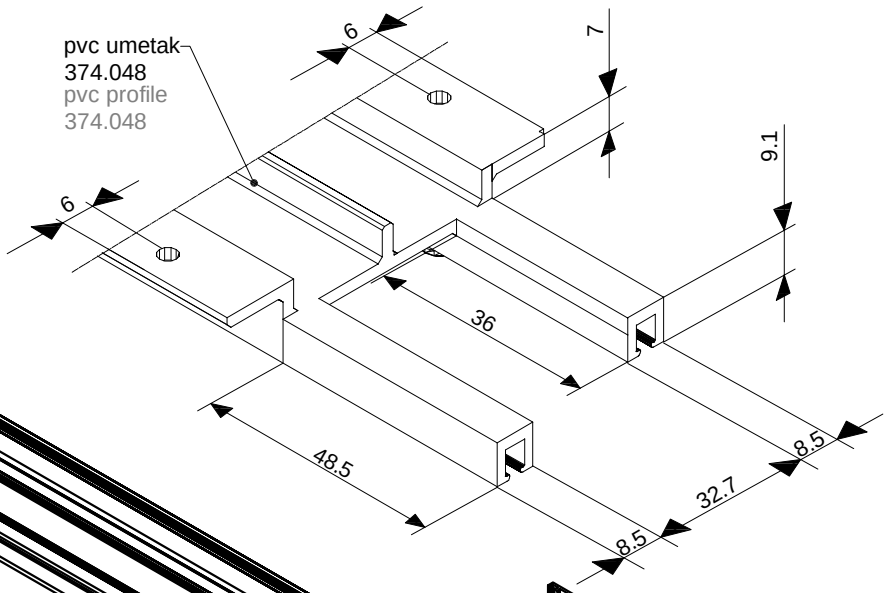


parapetna
prečka
FT-0576F
transom-
bottom sash
profile
FT-0576F

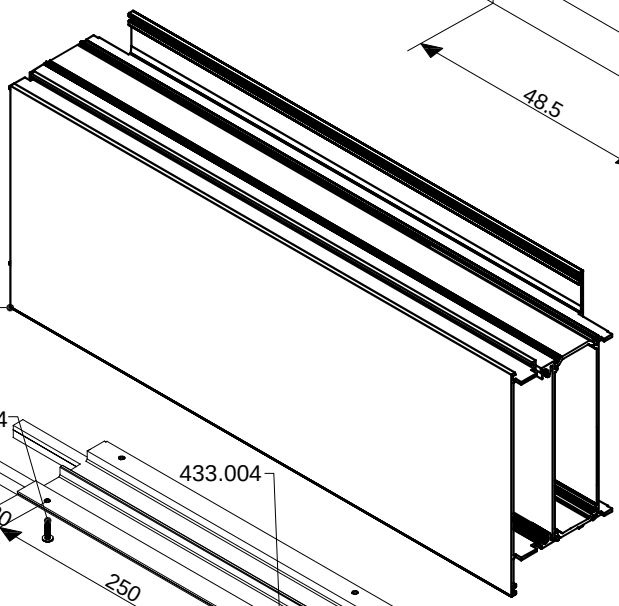
krilo otvaranje
unutra FT-0561F
sash - inward
opening FT-0561F

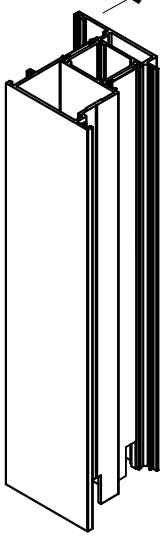


pvc umetak
374.048
pvc profile
374.048



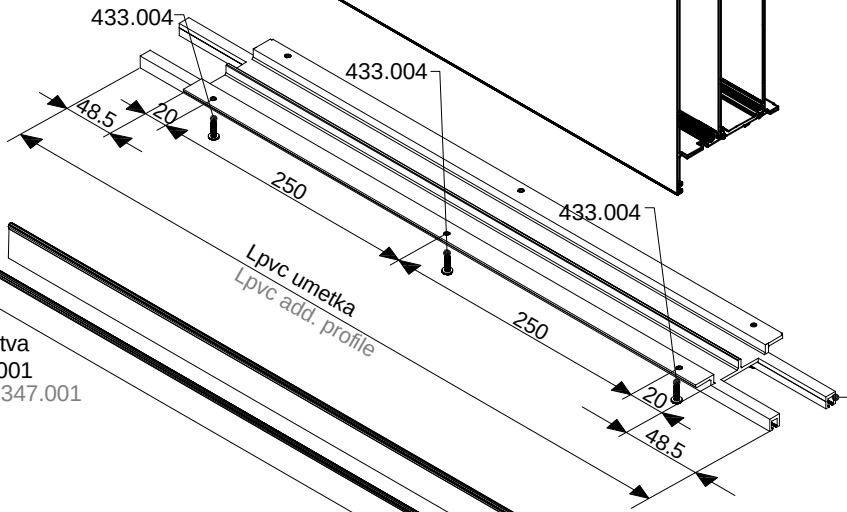
parapetna prečka
FT-0576F
transom-bottom sash
profile FT-0576F





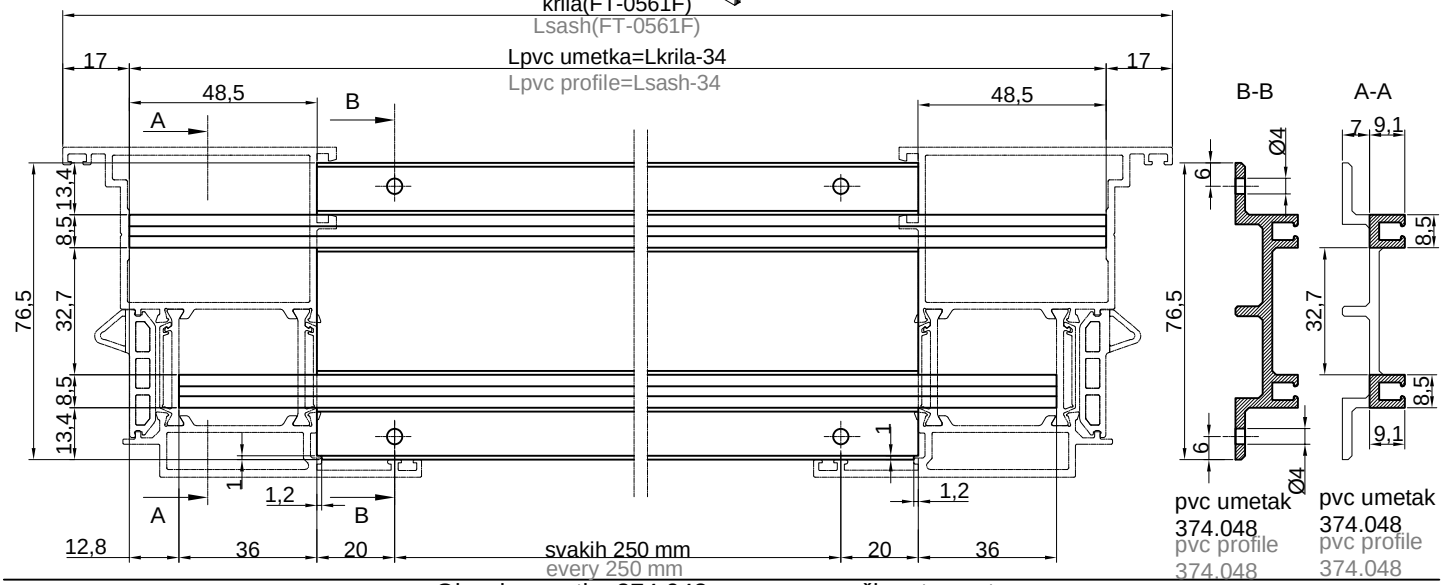
krilo otvaranje
unutra FT-0561F
sash - inward
opening FT-0561F

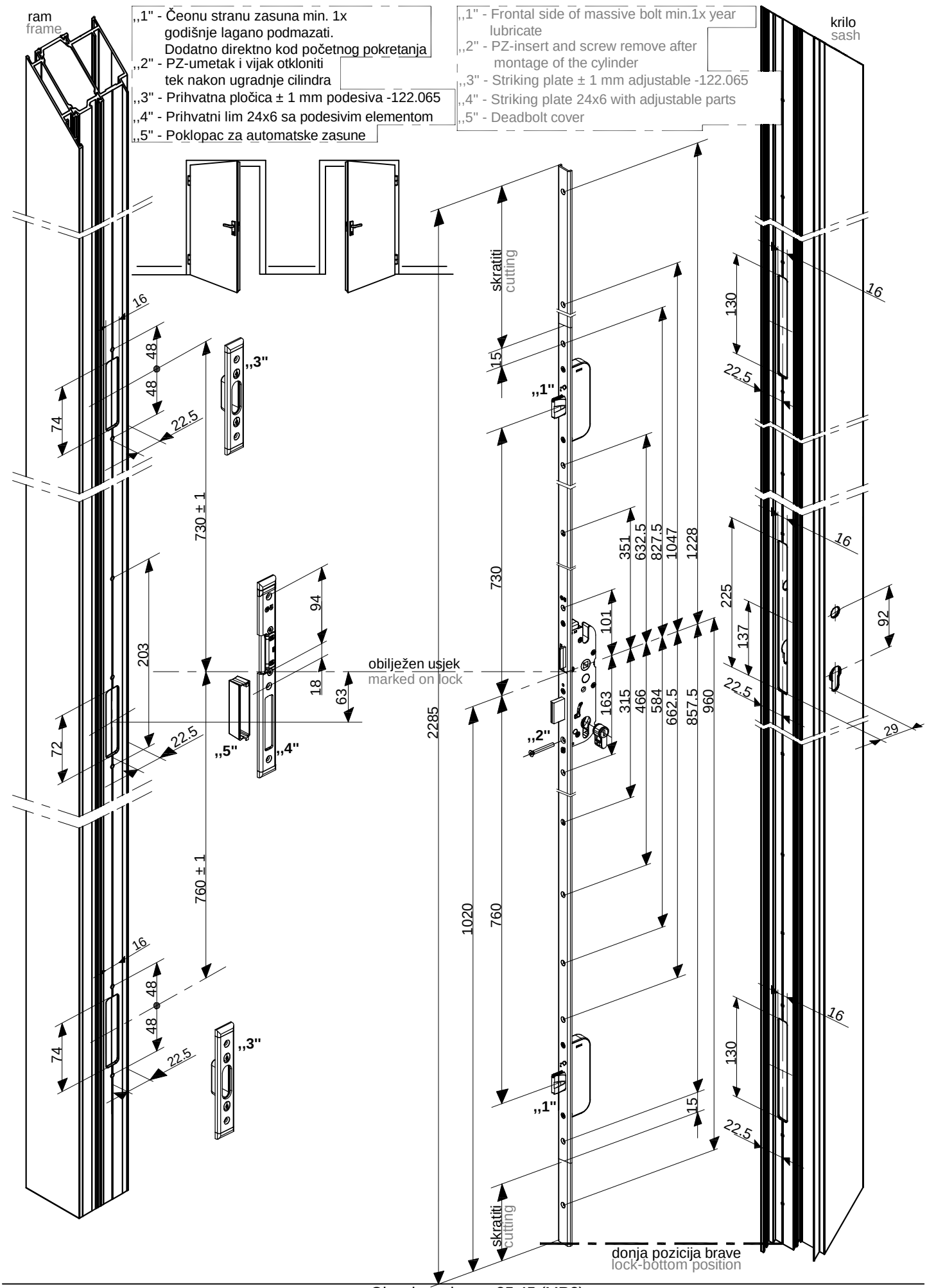
433.004



četkasta brtva
347.001
brush seal 347.001

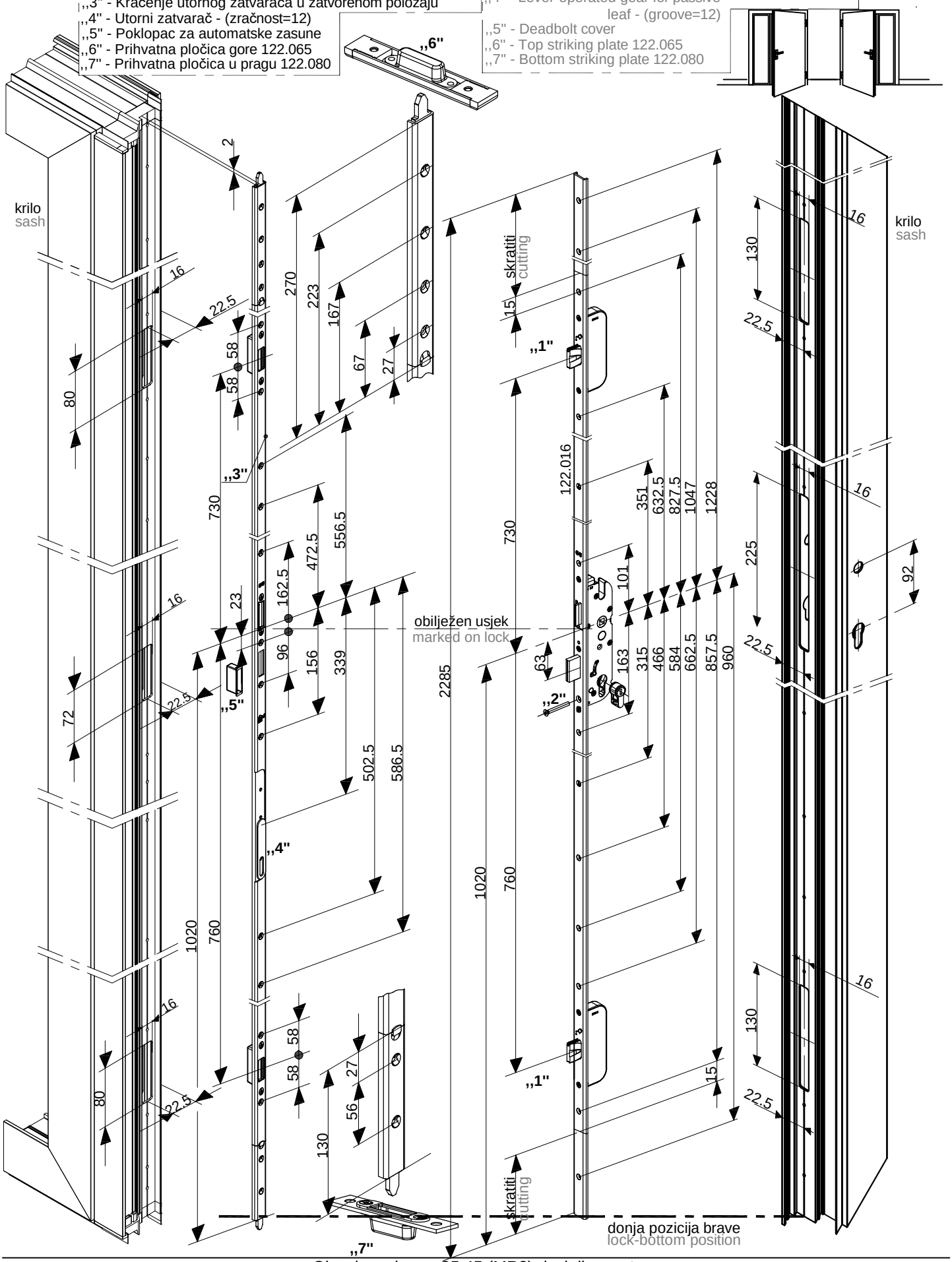
pvc umetak
374.048
add.pvc profile
374.048



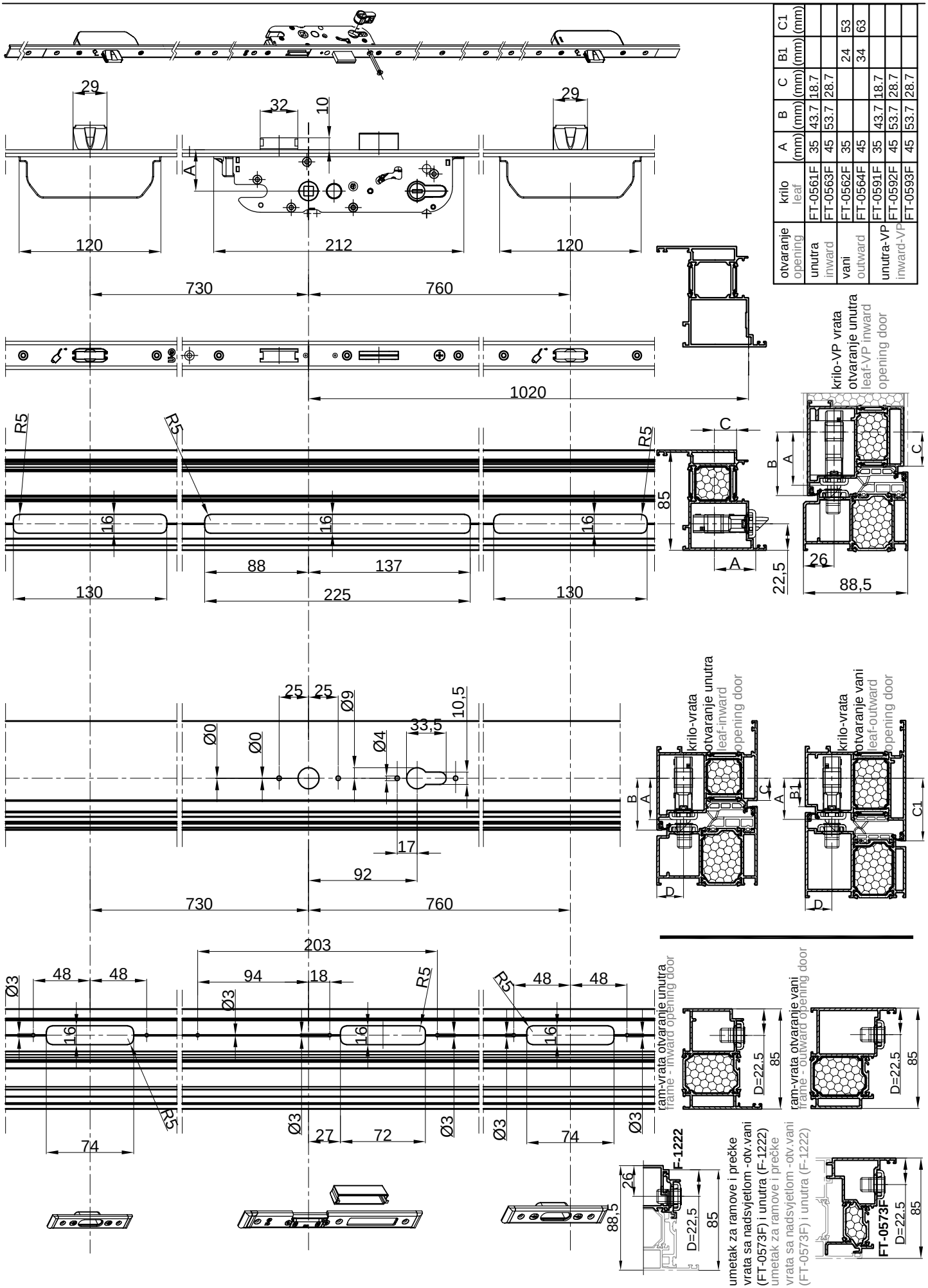

ram
frame
krilo
sash
„1" - Čeonu stranu zasuna min. 1x godišnje lagano podmazati. Dodatno direktno kod početnog pokretanja
„2" - PZ-umetak i vijak otkloniti tek nakon ugradnje cilindra
„3" - Prihvatna pločica ± 1 mm podesiva -122.065
„4" - Prihvatni lim 24x6 sa podesivim elementom
„5" - Poklopac za automatske zasune
„1" - Frontal side of massive bolt min.1x year lubricate
„2" - PZ-insert and screw remove after montage of the cylinder
„3" - Striking plate ± 1 mm adjustable -122.065
„4" - Striking plate 24x6 with adjustable parts
„5" - Deadbolt cover
skratiti
cutting
obilježen usjek
marked on lock
donja pozicija brave
lock-bottom position
730 ± 1
760 ± 1
2285
1020
760
730
203
72
74
48
22.5
16
94
63
18
101
163
315
466
584
662.5
857.5
960
351
632.5
827.5
1047
1228
225
137
92
29
130
15

,,1" - Čeonu stranu zasuna min. 1x godišnje lagano podmazati. Dodatno direktno kod početnog pokretanja
,,2" - PZ-umetak i vijak tek nakon ugradnje cilindra otkloniti
,,3" - Kraćenje utornog zatvarača u zatvorenom položaju
,,4" - Utorni zatvarač - (zračnost=12)
,,5" - Poklopac za automatske zasune
,,6" - Prihvatna pločica gore 122.065
,,7" - Prihvatna pločica u pragu 122.080

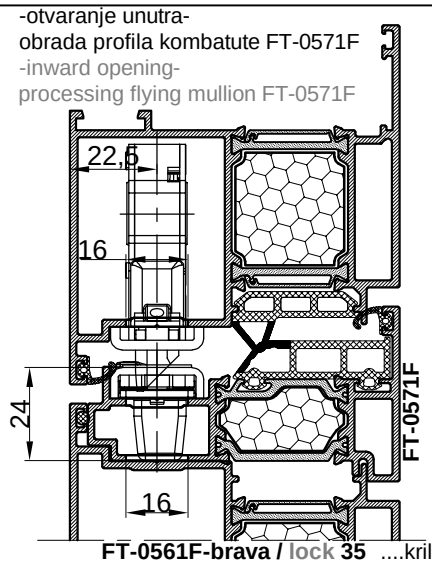
,,1" - Frontal side of massive bolt min.1x year lubricate
,,2" - PZ-insert and screw after montage cylinder removed
,,3" - Cutting lever operated gear in closed position
,,4" - Lever-operated gear for passive leaf - (groove=12)
,,5" - Deadbolt cover
,,6" - Top striking plate 122.065
,,7" - Bottom striking plate 122.080



otvaranje opening	krilo leaf	A (mm)	B (mm)	C (mm)	B1 (mm)	C1 (mm)
unutra inward	FT-0561F	35	43.7	18.7		
	FT-0563F	45	53.7	28.7		
vani outward	FT-0562F	35			24	53
	FT-0564F	45			34	63
unutra-VP inward-VP	FT-0591F	35	43.7	18.7		
	FT-0592F	45	53.7	28.7		
	FT-0593F	45	53.7	28.7		

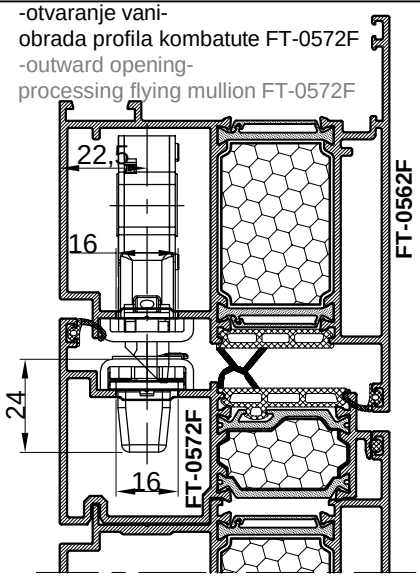


-otvaranje unutra-
obrada profila kombatute FT-0571F
-inward opening-
processing flying mullion FT-0571F



FT-0561F-brava / lock 35 ....krilo/leaf
(FT-0563F-brava / lock 45) ....krilo/leaf
(FT-0591F-brava / lock 35) ....krilo/leaf
(FT-0592F-brava / lock 45) ....krilo/leaf
(FT-0593F-brava / lock 45) ....krilo/leaf

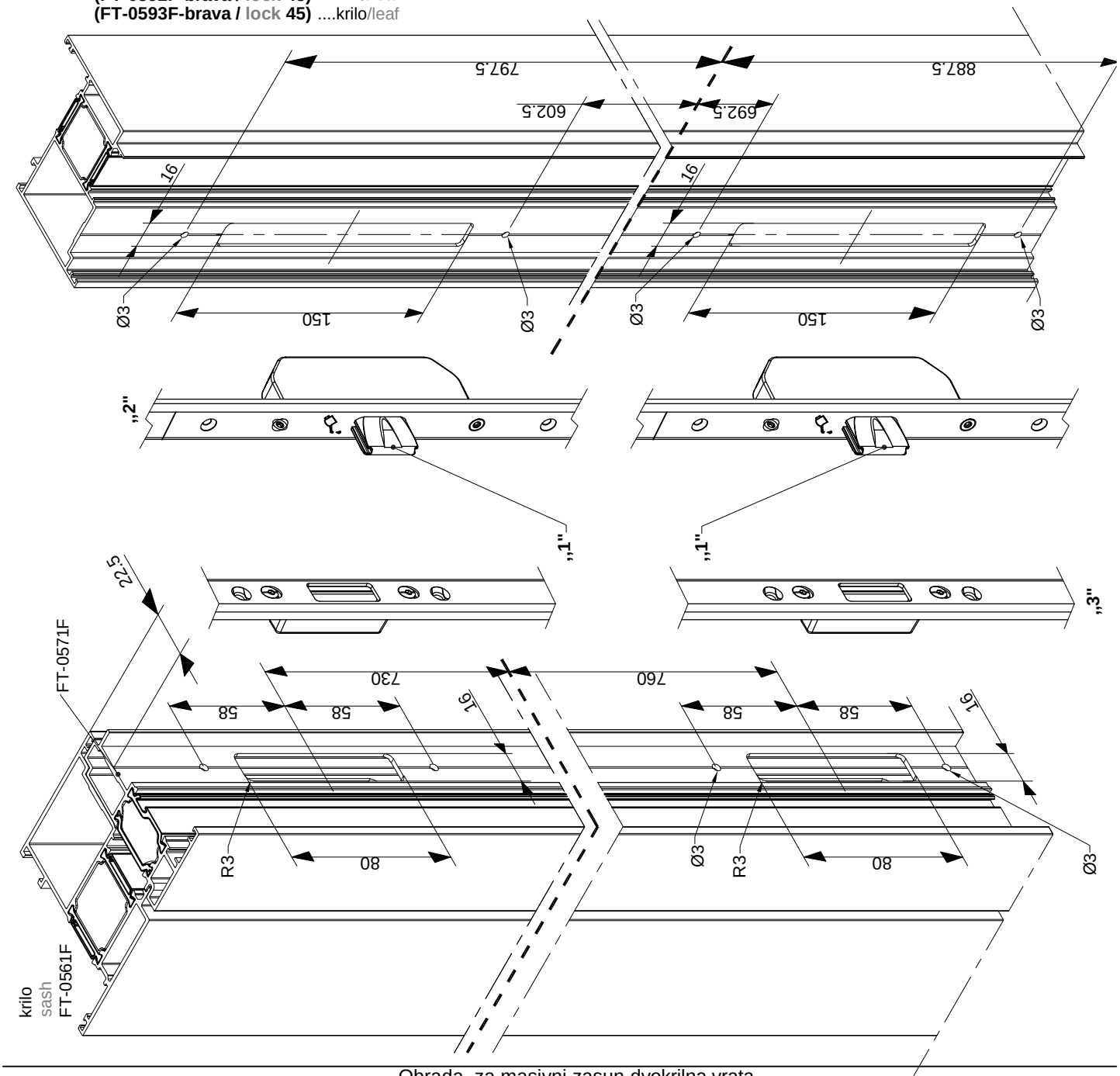
-otvaranje vani-
obrada profila kombatute FT-0572F
-outward opening-
processing flying mullion FT-0572F

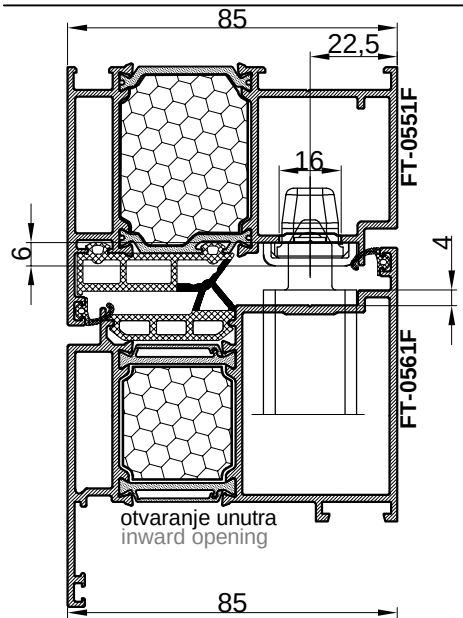


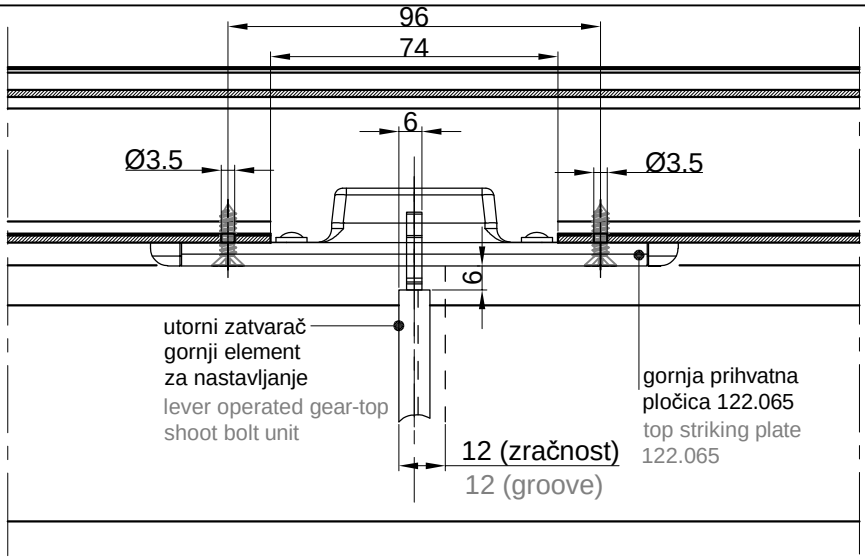
FT-0562F-brava / lock 35 ....krilo/leaf
(FT-0564F-brava / lock 45) ....krilo/leaf

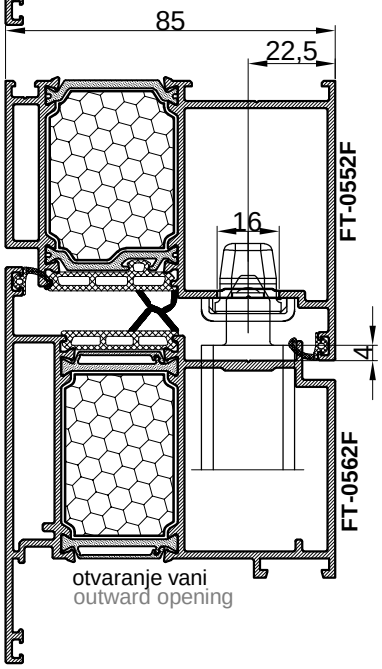
,,1" - čeonu stranu zasuna min. 1x godišnje lagano podmazati. Dodatno direktno kod početnog pokretanja
,,2" - brava sa masivnim zasunima
,,3" - utorni zatvarač (zračnost=12)
– – obilježen usjek na bravi (osa ručke)

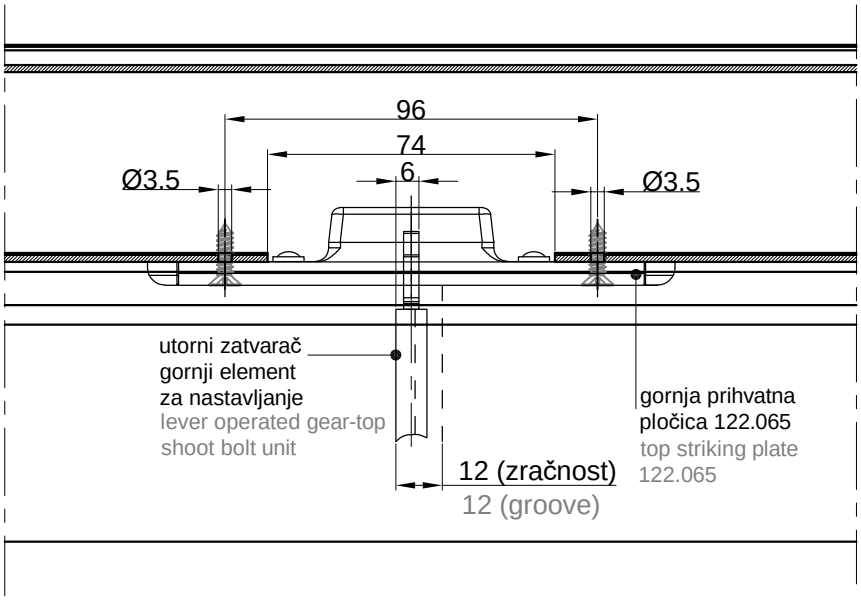
,,1" - Frontal side of massive bolt min.1x year lubricate
,,2" - multipoint lock with massive bolt
,,3" -Lever-operated gear for passive leaf - (groove=12)
– – marked on multipoint lock

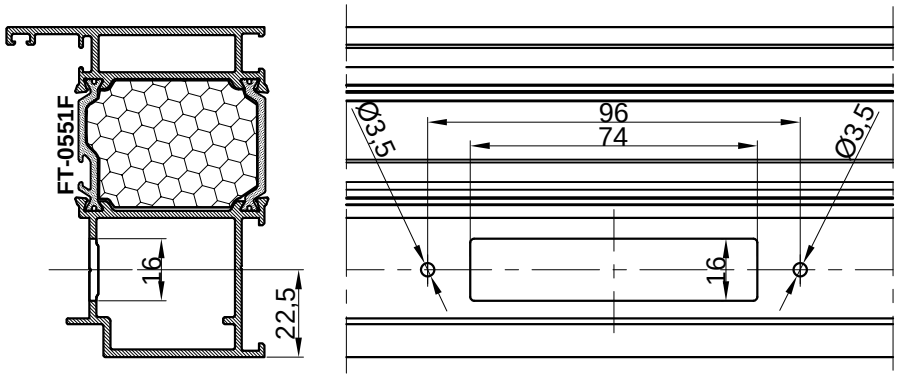






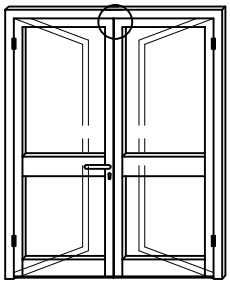


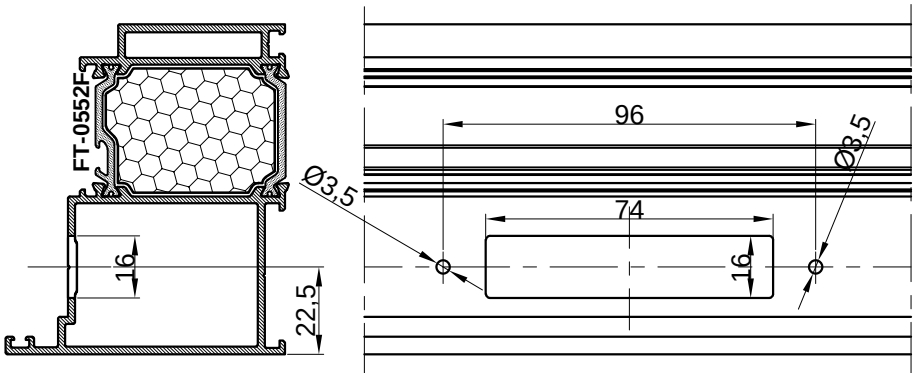




obrada rama FT-0551F (otvaranje unutra) za gornju prihvatnu pločicu 122.065

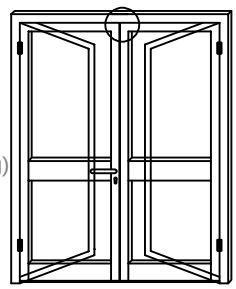
frame processing FT-0551F (inward opening) for top striking plate 122.065

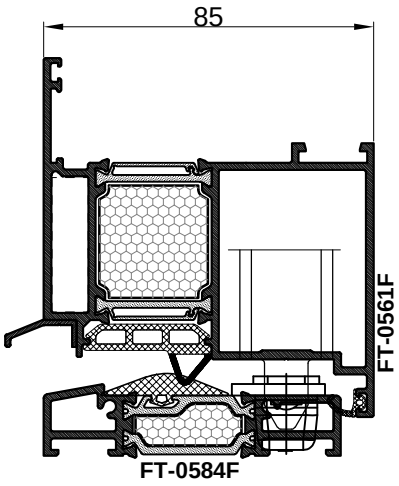




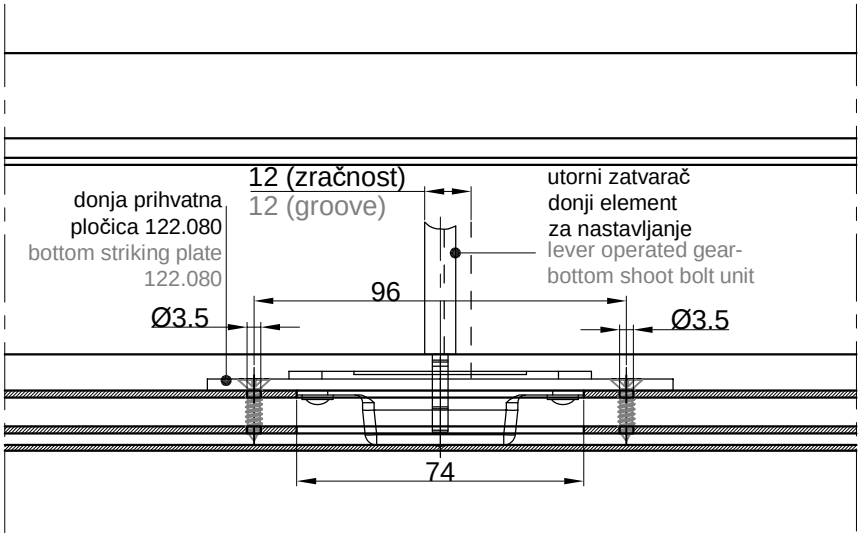
obrada rama FT-0552F (otvaranje vani) za gornju prihvatnu pločicu 122.065

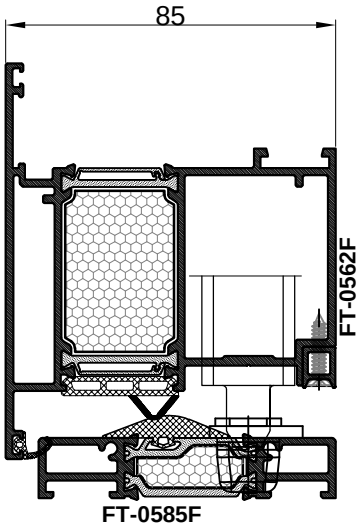
frame processing FT-0552F (outward opening) for top striking plate -122.065



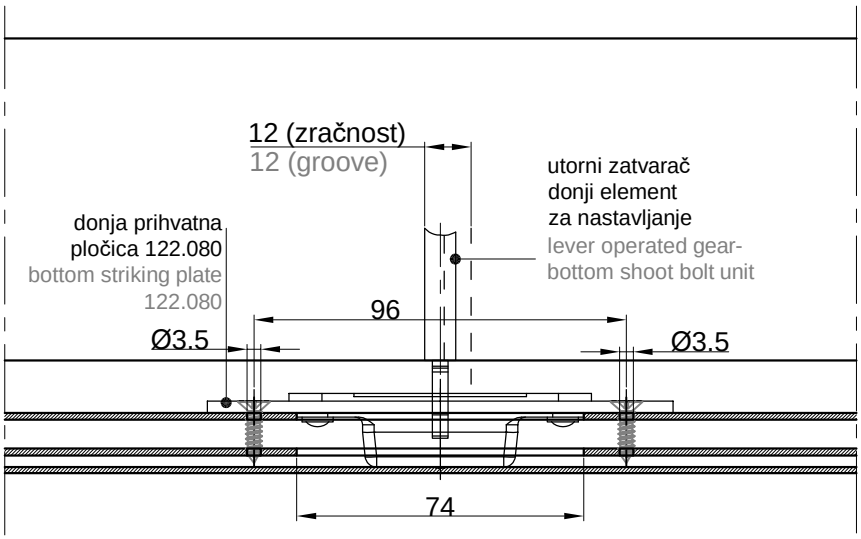


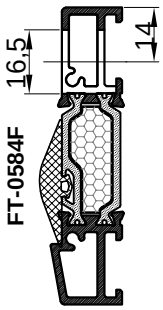
otvaranje unutra
inward opening

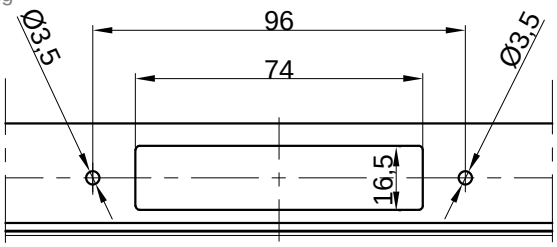




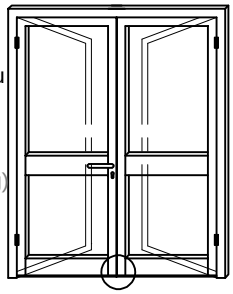
otvaranje vani
outward opening

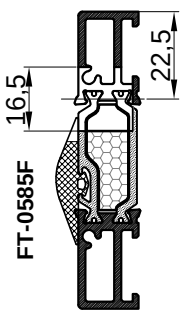


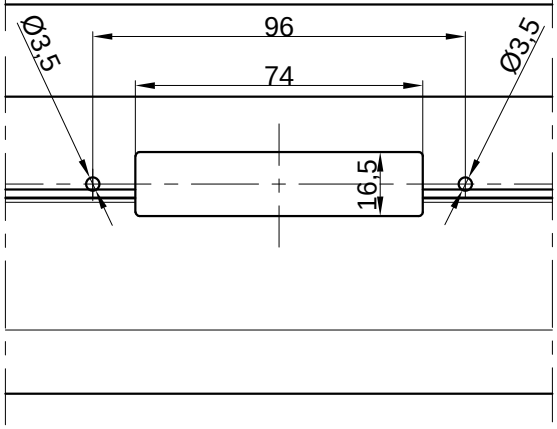




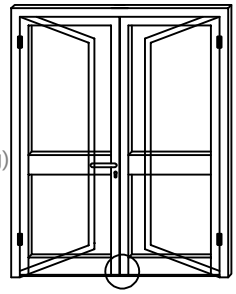
obrada rama FT-0551F (otvaranje unutra) za donju prihvatnu pločicu 122.080
frame processing FT-0551F (inward opening) for bottom striking plate 122.080

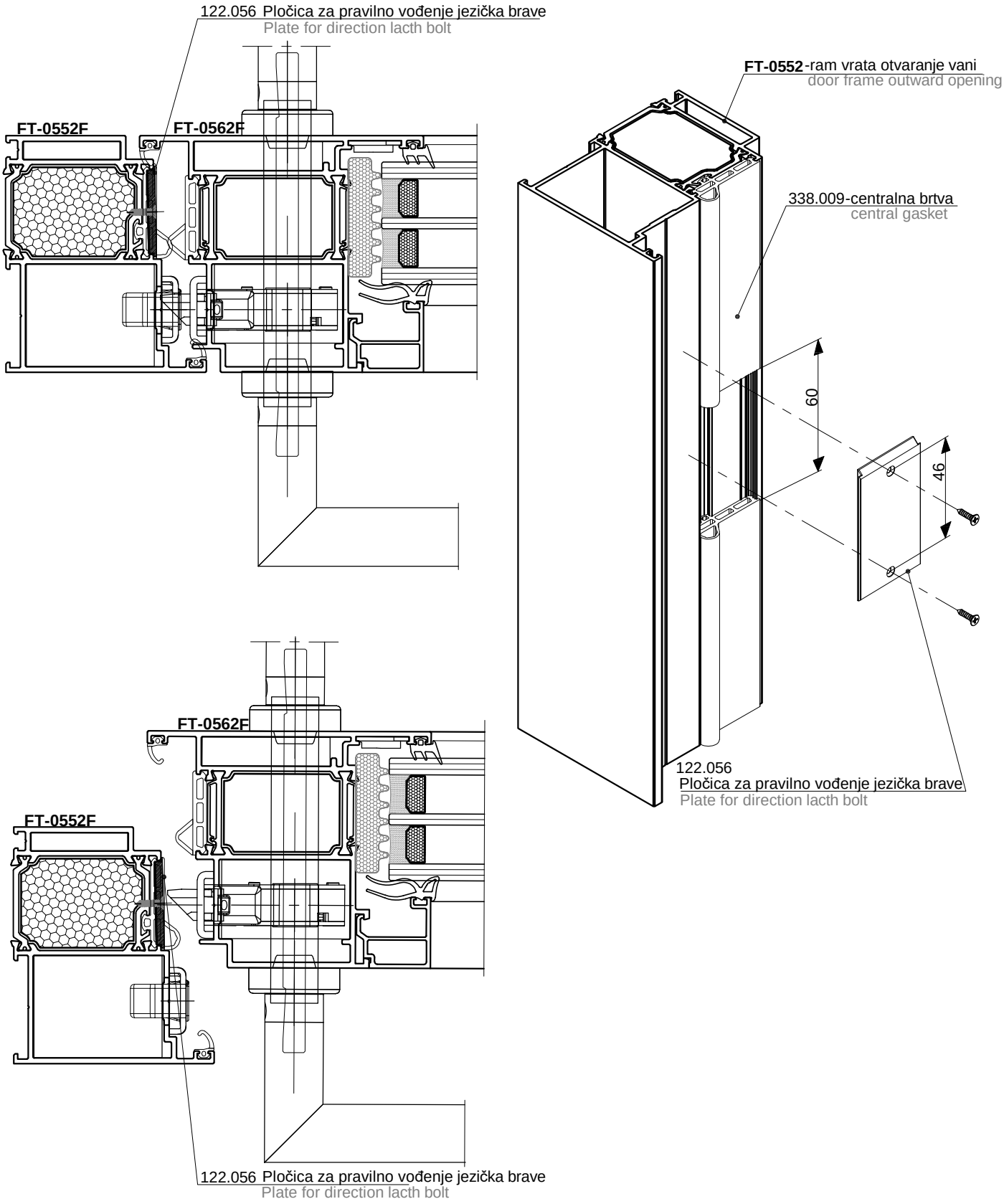


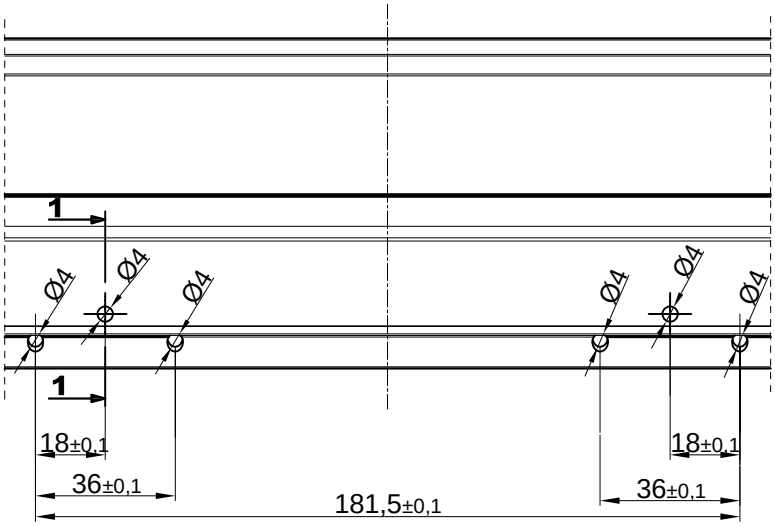


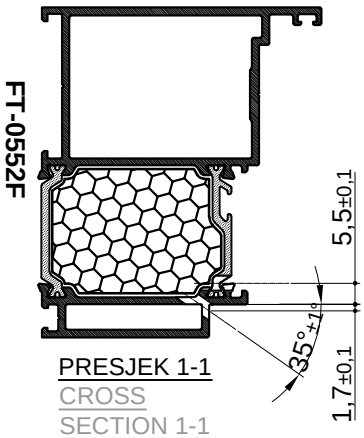


obrada rama FT-0552F (otvaranje vani) za donju prihvatnu pločicu 122.080
frame processing FT-0552F (outward opening) for bottom striking plate 122.080

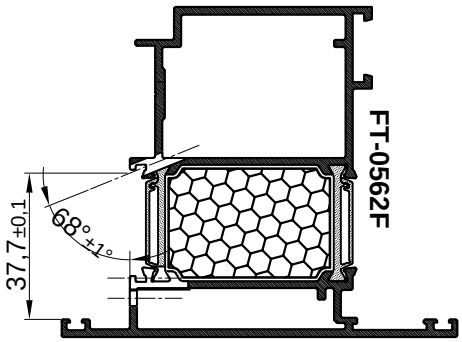



122.056 Pločica za pravilno vođenje jezičkа brave
Plate for direction lacth bolt
FT-0552F
FT-0562F
FT-0562F
FT-0552F
122.056 Pločica za pravilno vođenje jezičkа brave
Plate for direction lacth bolt
FT-0552-ram vrata otvaranje vani
door frame outward opening
338.009-centralna brtva
central gasket
60
46
122.056
Pločica za pravilno vođenje jezičkа brave
Plate for direction lacth bolt

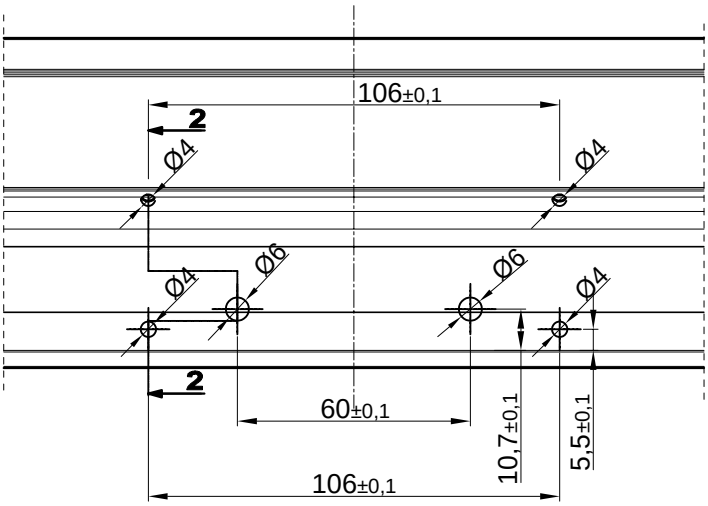


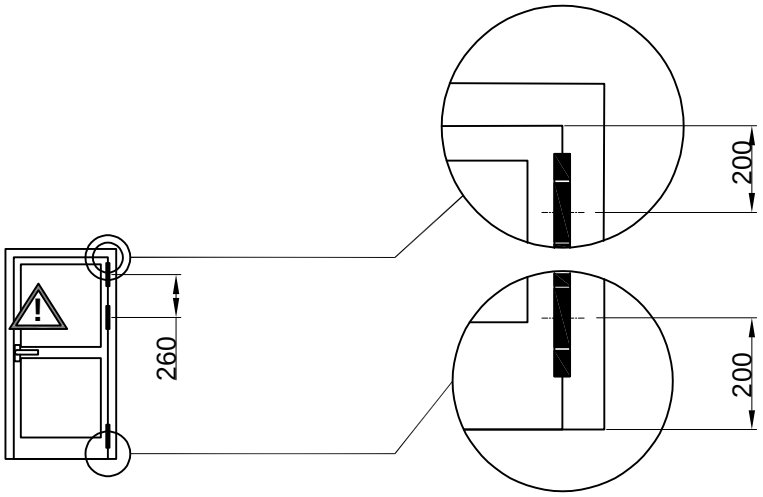


PRESJEK 1-1
CROSS
SECTION 1-1

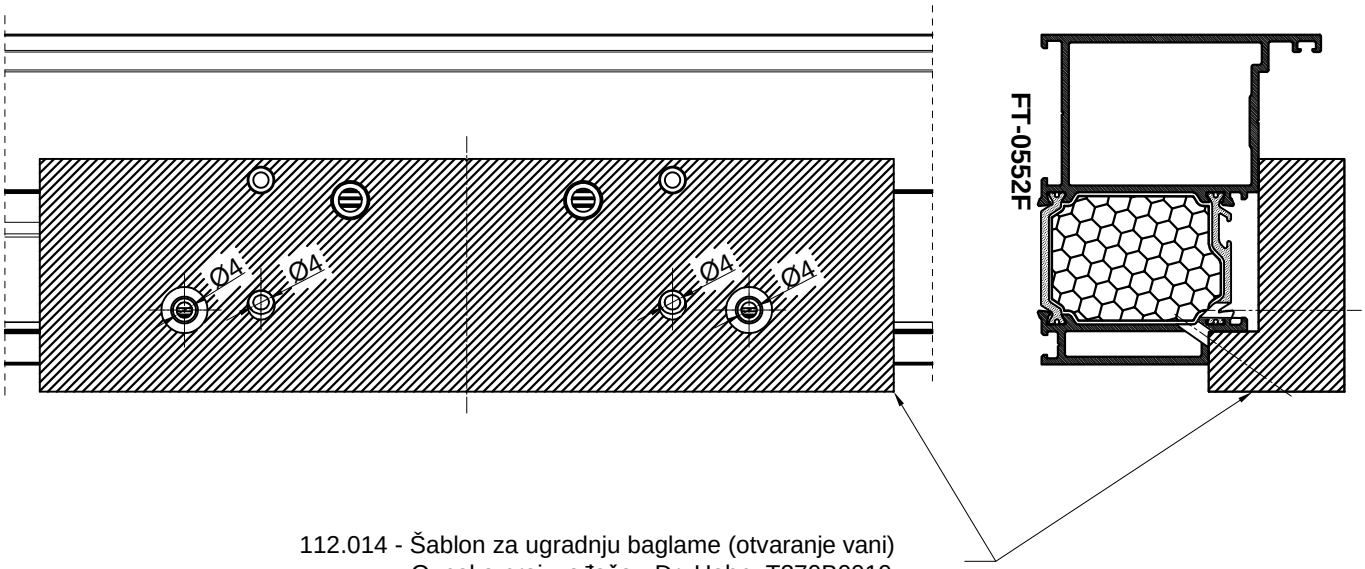


PRESJEK 2-2
CROSS
SECTION 2-2

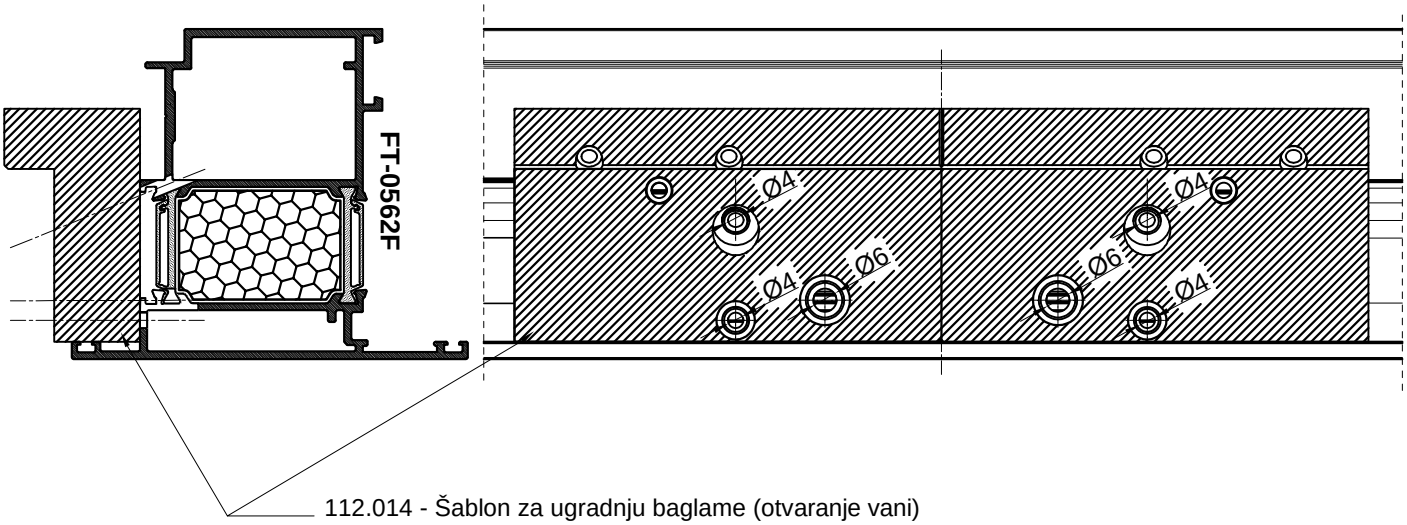




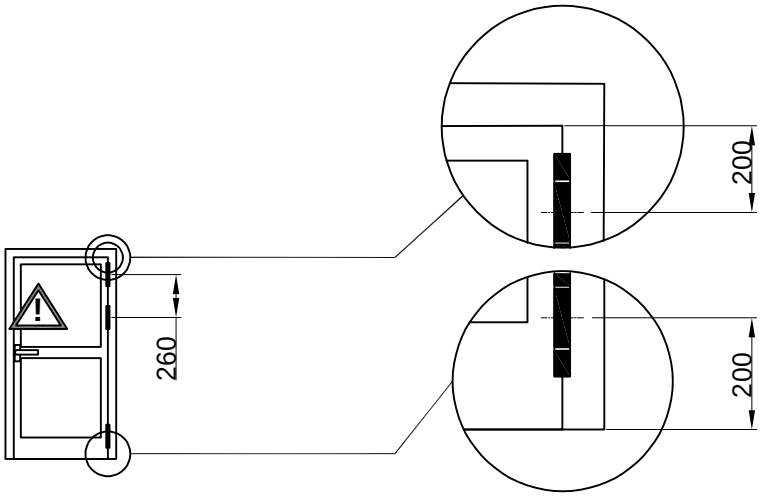
Napomena:
Obrada se vrši isključivo na obradnom centru ili pomoću namijenjenog šablona za obradu (112.014)
Note:
Processing is carried out exclusively on the machining center or using the intended drilling jig for processing (112.014)



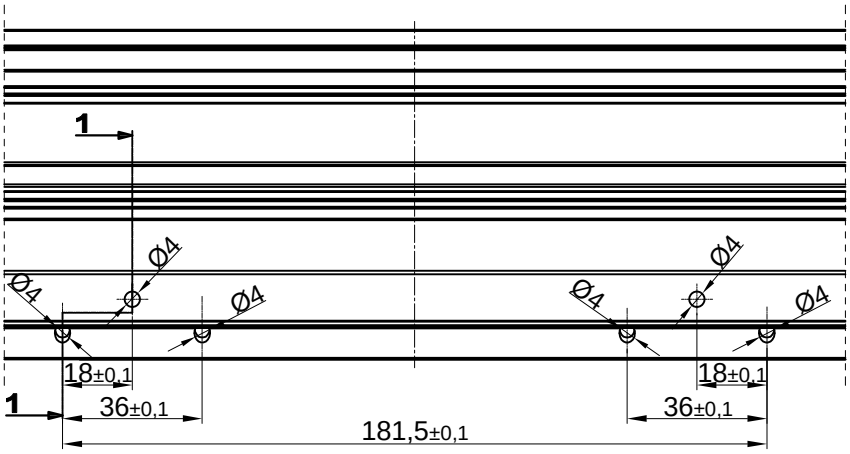
112.014 - Šablon za ugradnju baglame (otvaranje vani)
Oznaka proizvođača - Dr. Hahn: T370B0019
112.014 - Drilling jig for mounting of hinge (outward opening)
Manufacturer code - Dr. Hahn: T370B0019

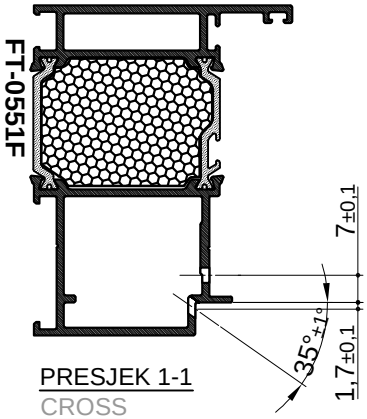


112.014 - Šablon za ugradnju baglame (otvaranje vani)
Oznaka proizvođača - Dr. Hahn: T370B0019
112.014 - Drilling jig for mounting of hinge (outward opening)
Manufacturer code - Dr. Hahn: T370B0019

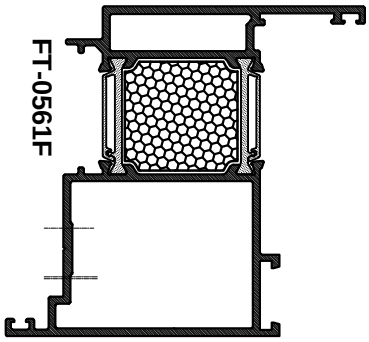


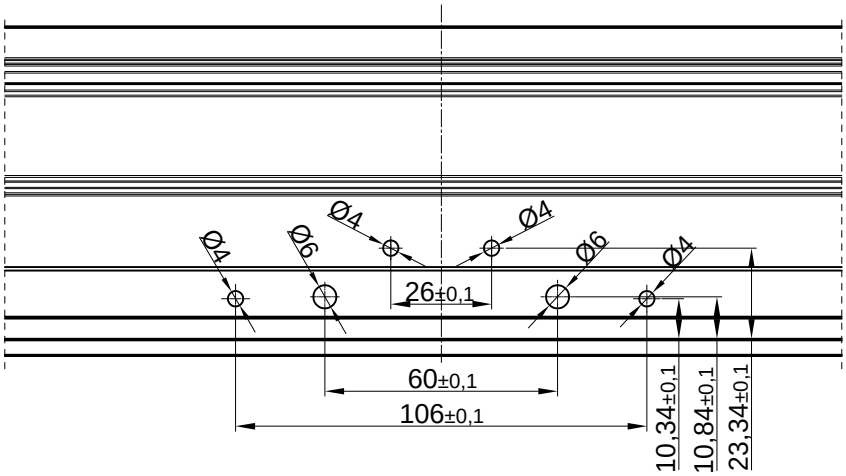
Napomena:
Obrada se vrši isključivo na obradnom centru ili pomoću namijenjenog šablona za obradu (112.014)
Note:
Processing is carried out exclusively on the machining center or using the intended drilling jig for processing (112.014)

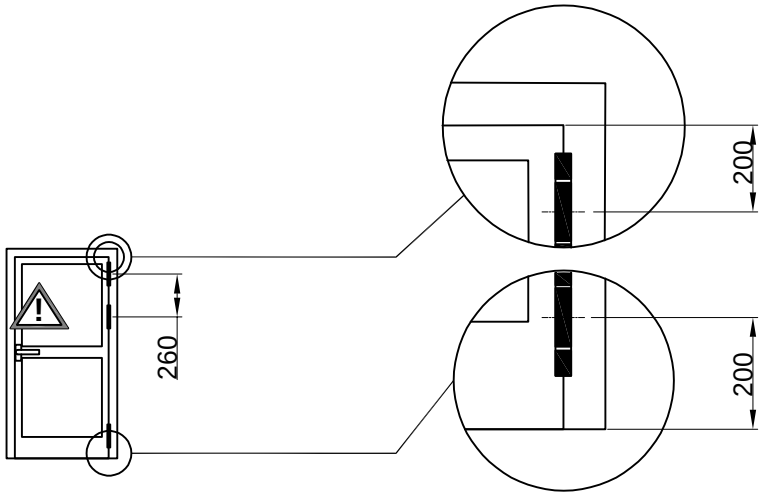




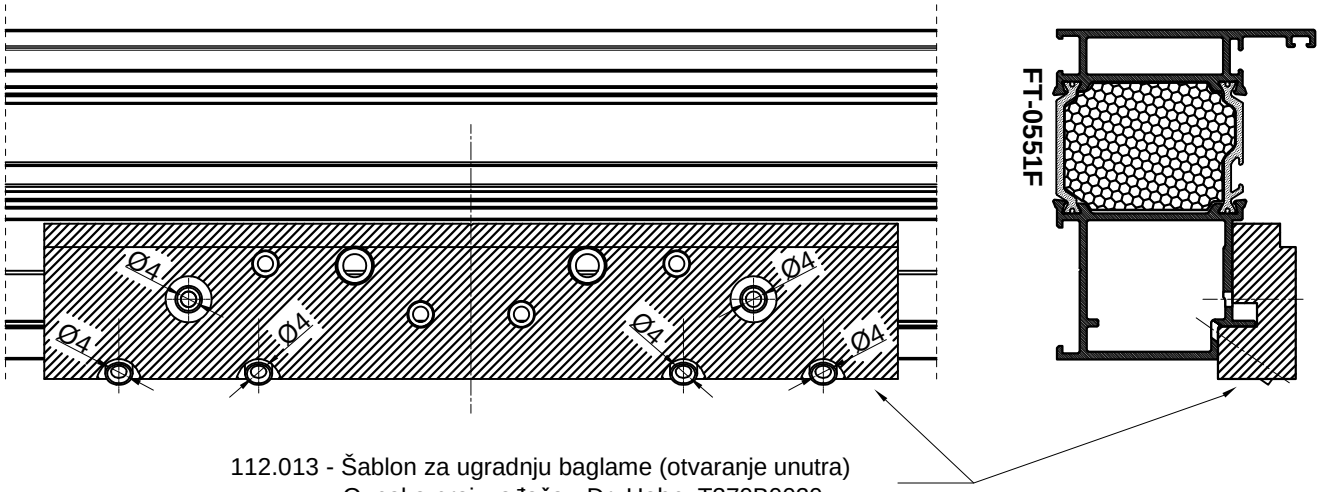
PRESJEK 1-1
CROSS SECTION 1-1



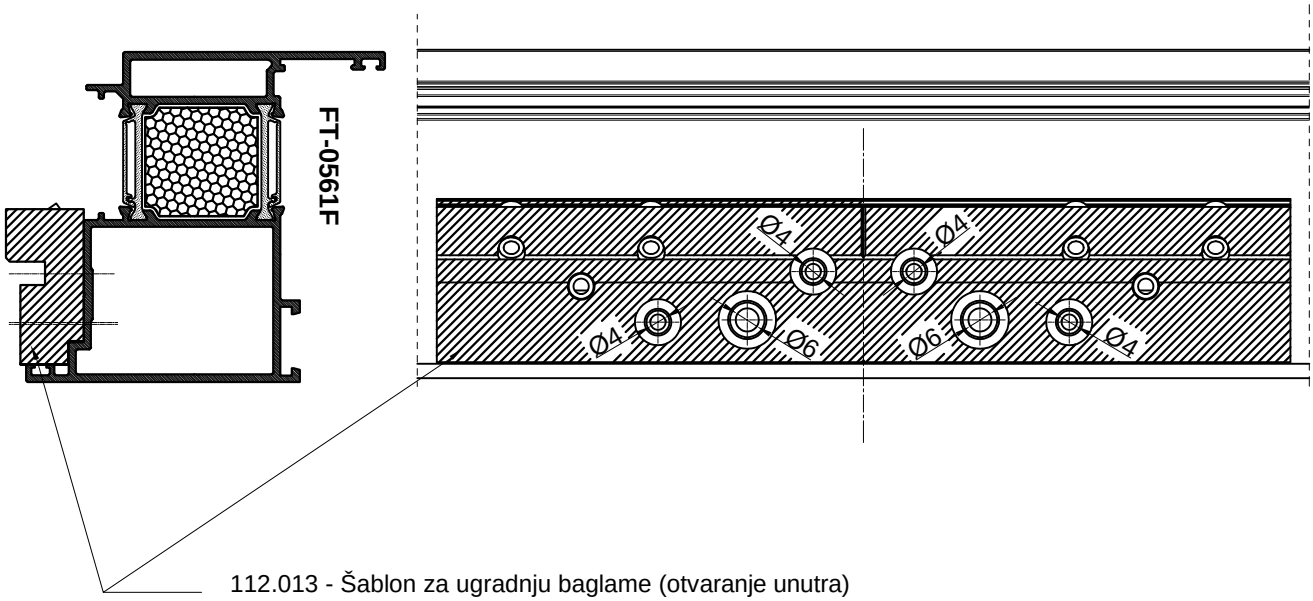




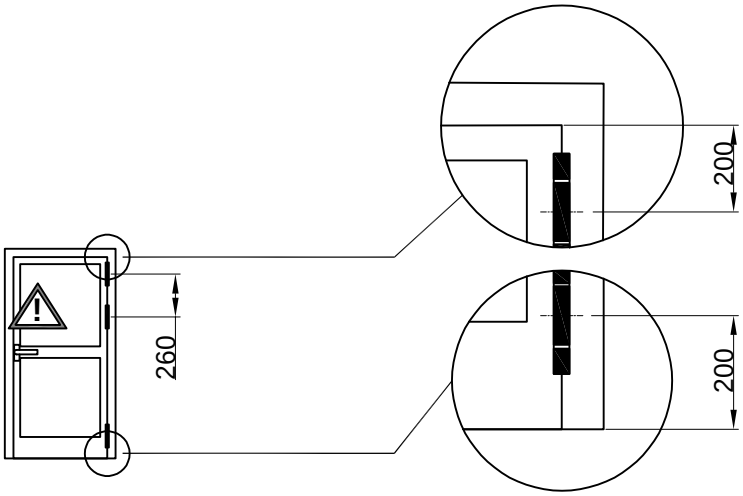
Napomena:
Obrada se vrši isključivo na obradnom centru ili pomoću namijenjenog šablona za obradu (112.013)
Remark:
Processing is carried out exclusively on the machining center or using the intended drilling jig for processing (112.013)



112.013 - Šablon za ugradnju baglame (otvaranje unutra)
Oznaka proizvođača - Dr. Hahn: T370B0020
112.013 - Drilling jig for mounting of hinge (inward opening)
Manufacturer code - Dr. Hahn: T370B0020

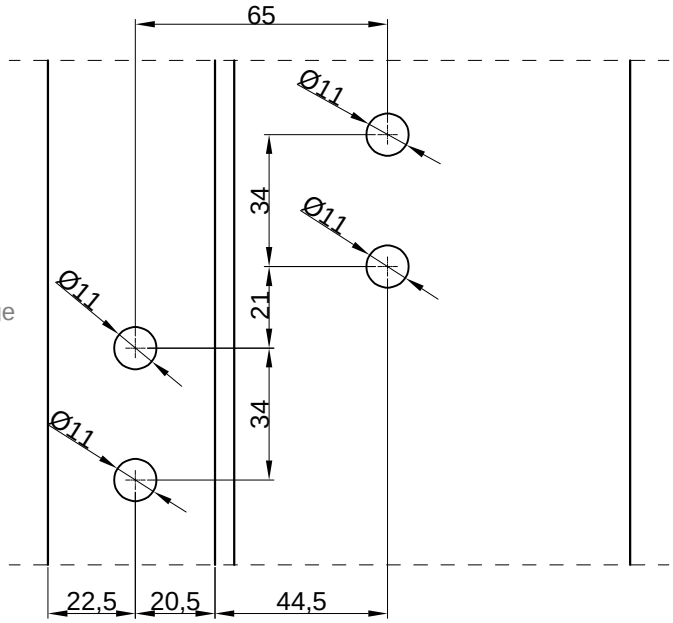


112.013 - Šablon za ugradnju baglame (otvaranje unutra)
Oznaka proizvođača - Dr. Hahn: T370B0020
112.013 - Drilling jig for mounting of hinge (inward opening)
Manufacturer code - Dr. Hahn: T370B0020

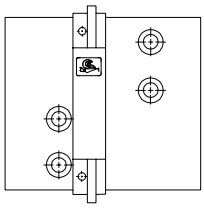


Napomena:
Obrada se vrši isključivo na obradnom centru ili pomoću namijenjenog šablona za obradu (112.013)
Remark:
Processing is carried out exclusively on the machining center or using the intended drilling jig for processing (112.013)

Obrada za dvodijelnu šarku
Türband 4 AT
Processing for two-piece hinge
Türband 4 AT

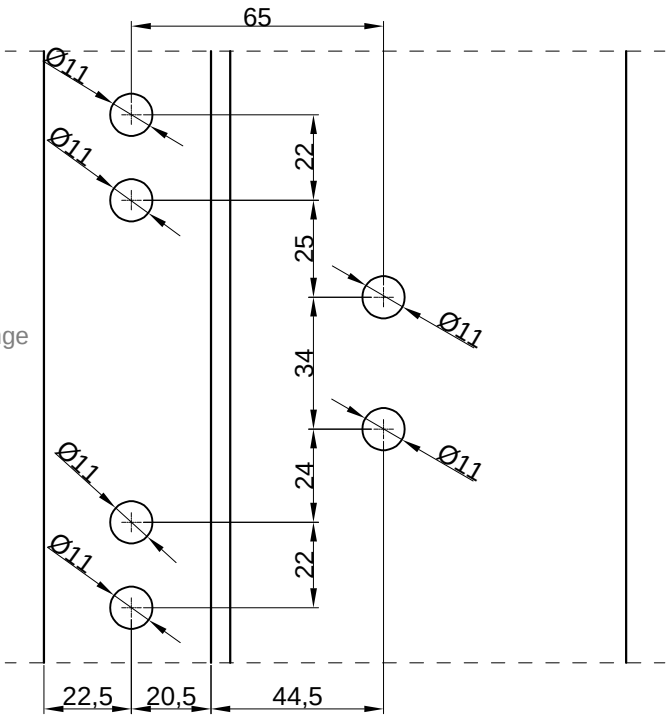


Napomena:
Obrada se vrši isključivo na obradnom centru ili pomoću namijenjenog šablona za obradu (112.016).
Remark:
Processing is carried out exclusively on the machining center or using the intended drilling jig for processing (112.016).

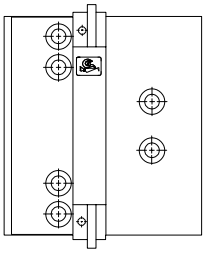


112.016

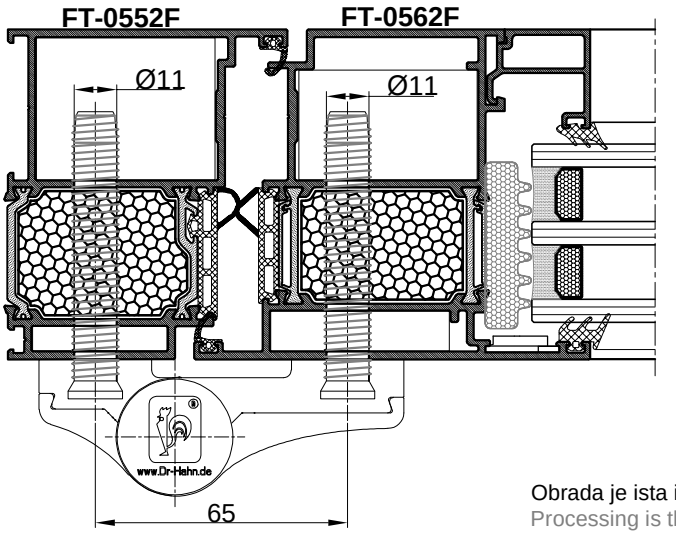
Obrada za trodijelnu šarku
Türband 4 AT
Processing for three-piece hinge
Türband 4 AT



Napomena:
Obrada se vrši isključivo na obradnom centru ili pomoću namijenjenog šablona za obradu (112.018).
Remark:
Processing is carried out exclusively on the machining center or using the intended drilling jig for processing (112.018).

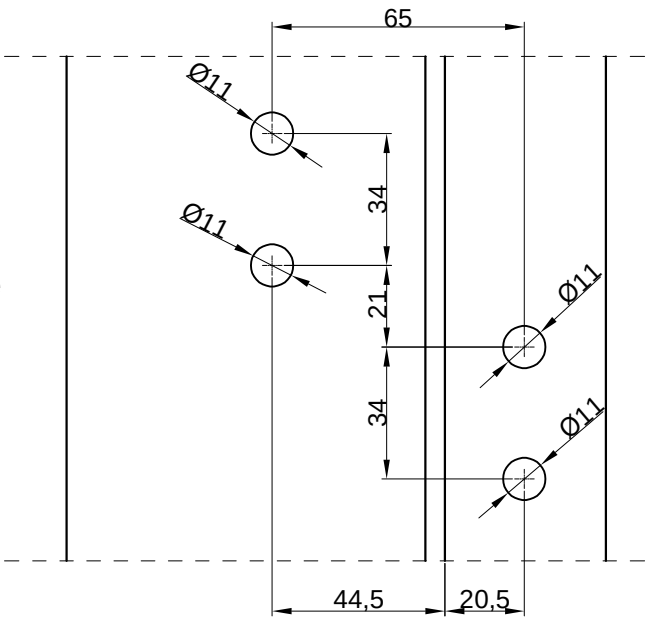


112.018

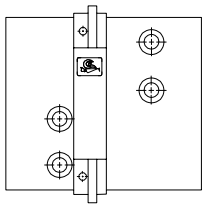


Obrada je ista i za profil krila FT-0564F.
Processing is the same for the leaf profile FT-0564F.

Obrada za dvodijelnu šarku
Türband 4 AT
Processing for two-piece hinge
Türband 4 AT

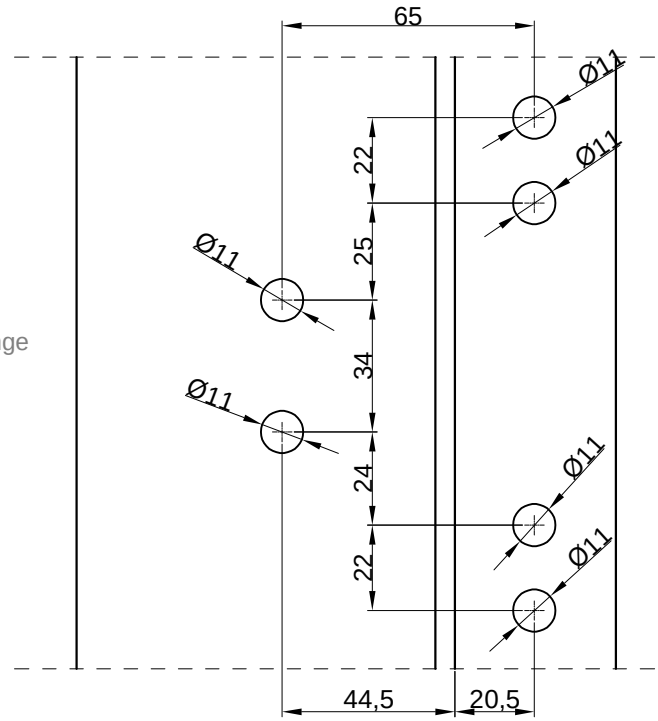


Napomena:
Obrada se vrši isključivo na obradnom centru ili pomoću namijenjenog šablona za obradu (112.016).
Remark:
Processing is carried out exclusively on the machining center or using the intended drilling jig for processing (112.016).

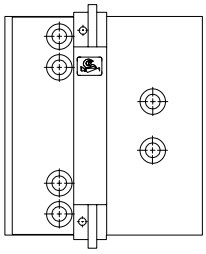


112.016

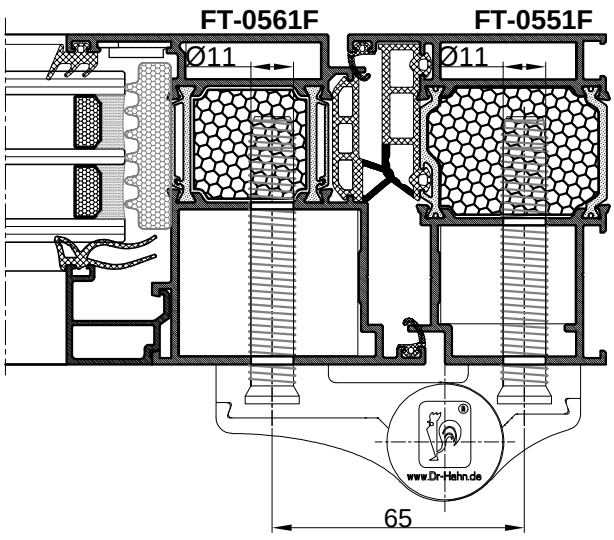
Obrada za trodijelnu šarku
Türband 4 AT
Processing for three-piece hinge
Türband 4 AT



Napomena:
Obrada se vrši isključivo na obradnom centru ili pomoću namijenjenog šablona za obradu (112.018).
Remark:
Processing is carried out exclusively on the machining center or using the intended drilling jig for processing (112.018).

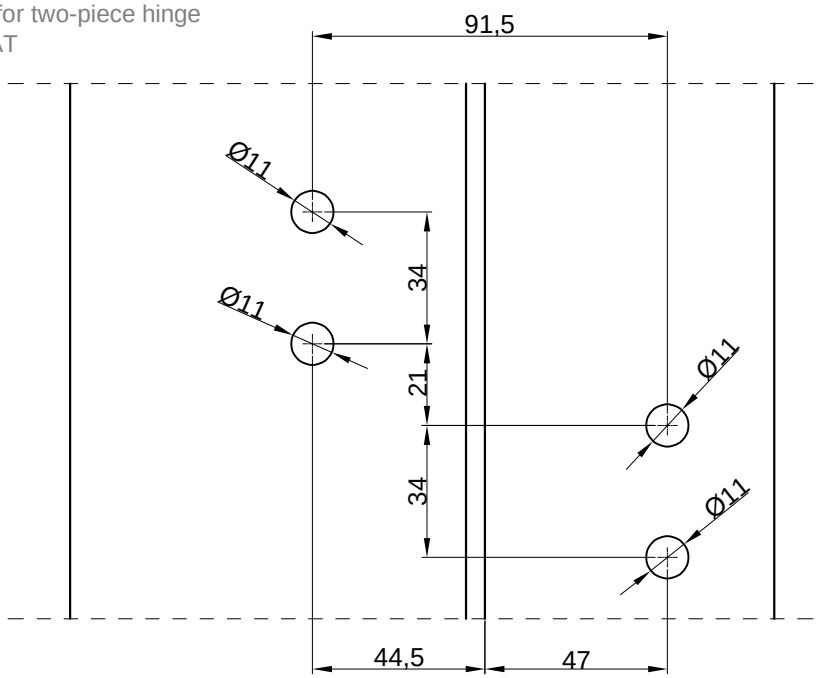


112.018

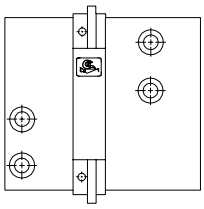


Obrada je ista i za profile krila FT-0563F, FT-0591F, FT-0592, FFT-0593F.
Processing is the same for the leaf profiles FT-0563F, FT-0591F, FT-0592F, FT-0593F.

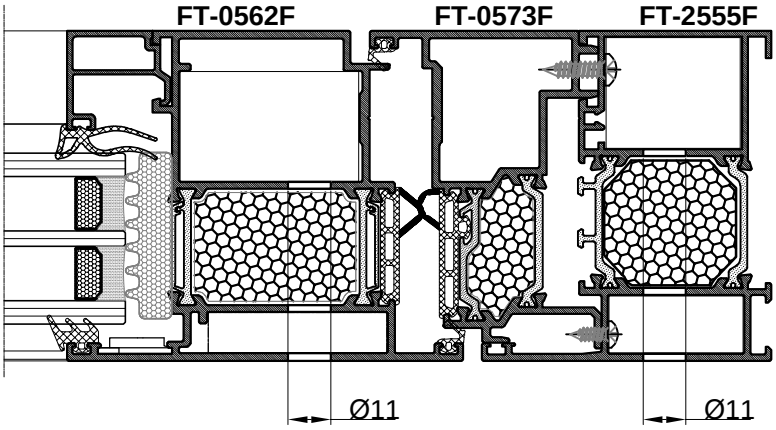
Obrada za dvodijelnu šarku
Türband 4 AT
Processing for two-piece hinge
Türband 4 AT

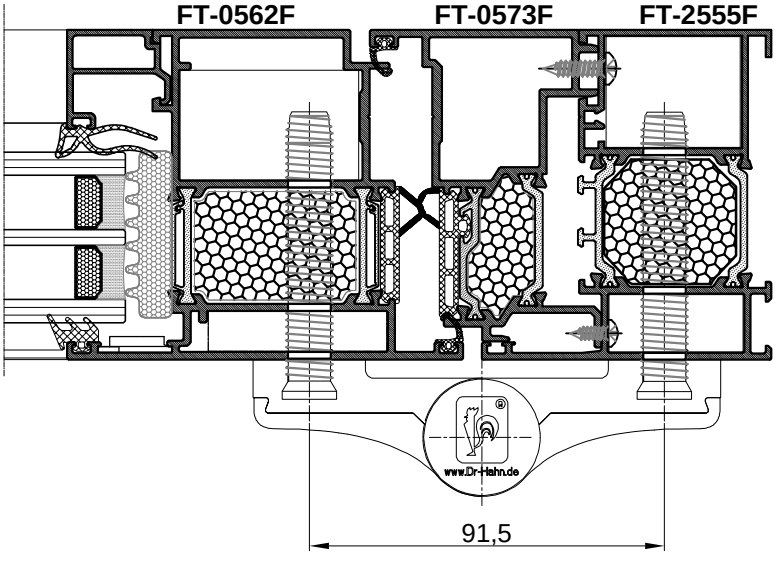


Napomena:
Obrada se vrši isključivo na obradnom centru ili pomoću namijenjenog šablona za obradu (112.020).
Remark:
Processing is carried out exclusively on the machining center or using the intended drilling jig for processing (112.020).

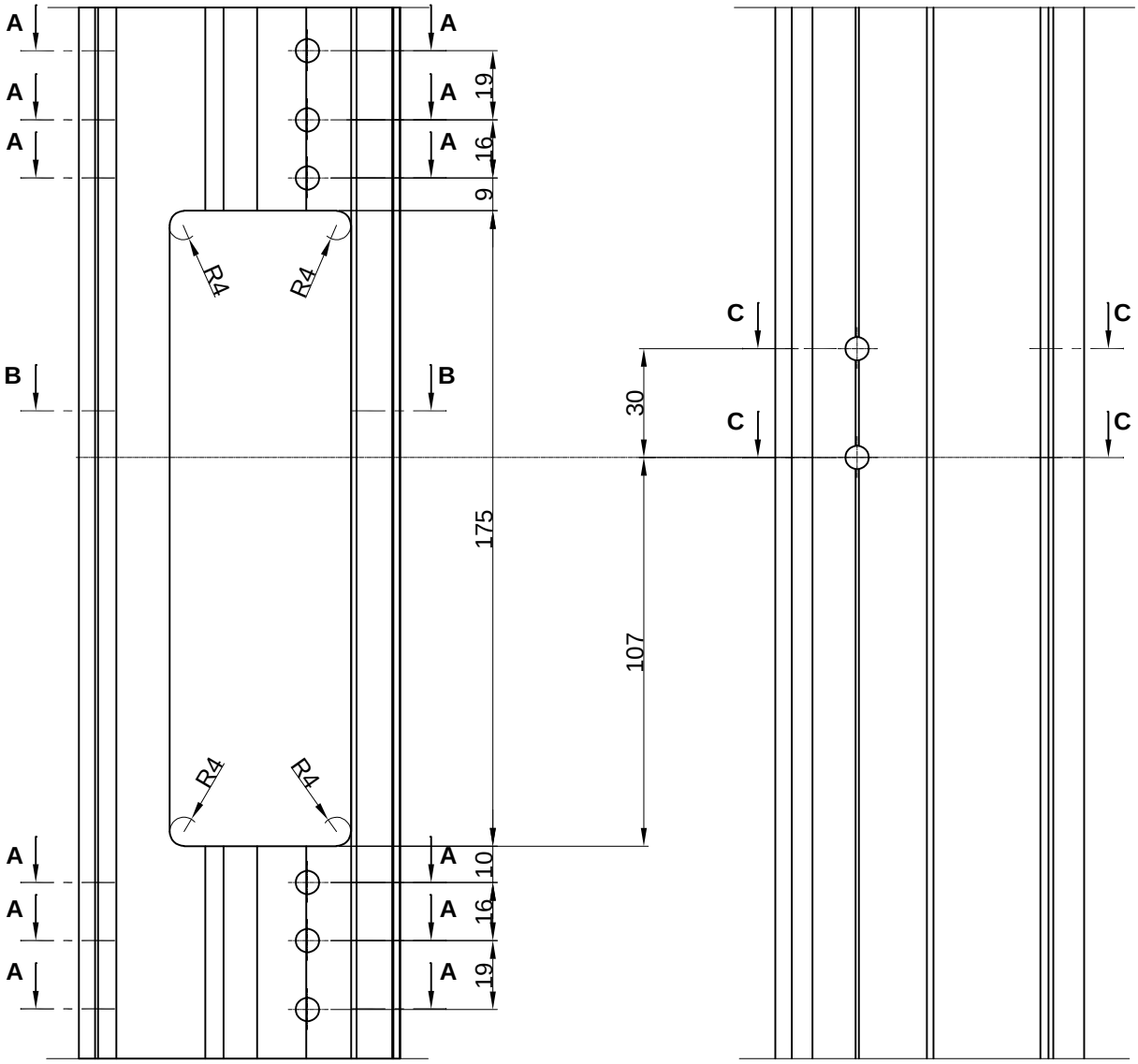


112.020

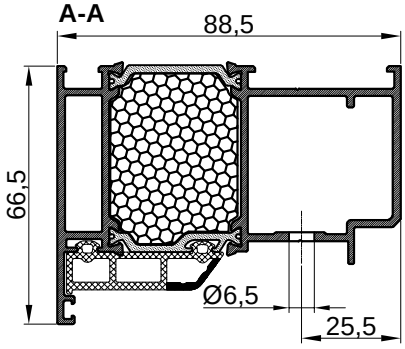




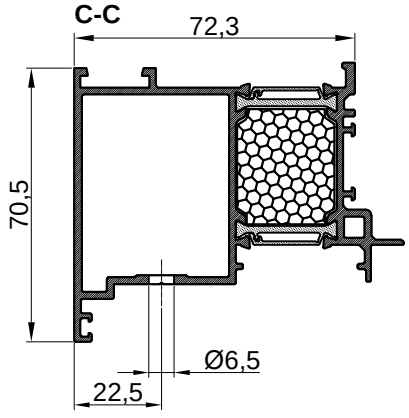
Obrada je ista i za profil krila FT-0564F.
Processing is the same for the leaf profile FT-0564F.



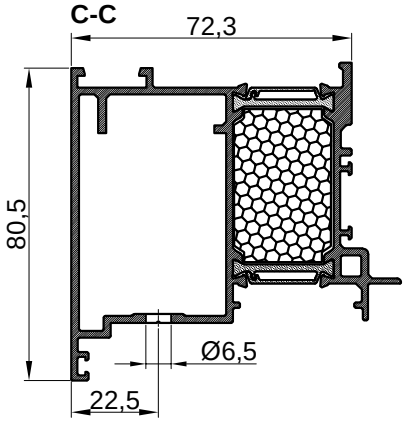
FT-0556F
A-A

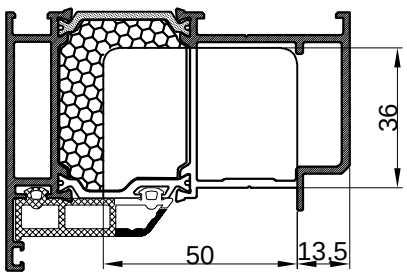


FT-0591F
C-C

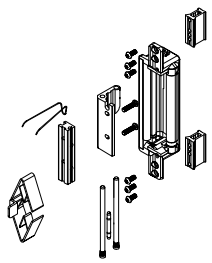


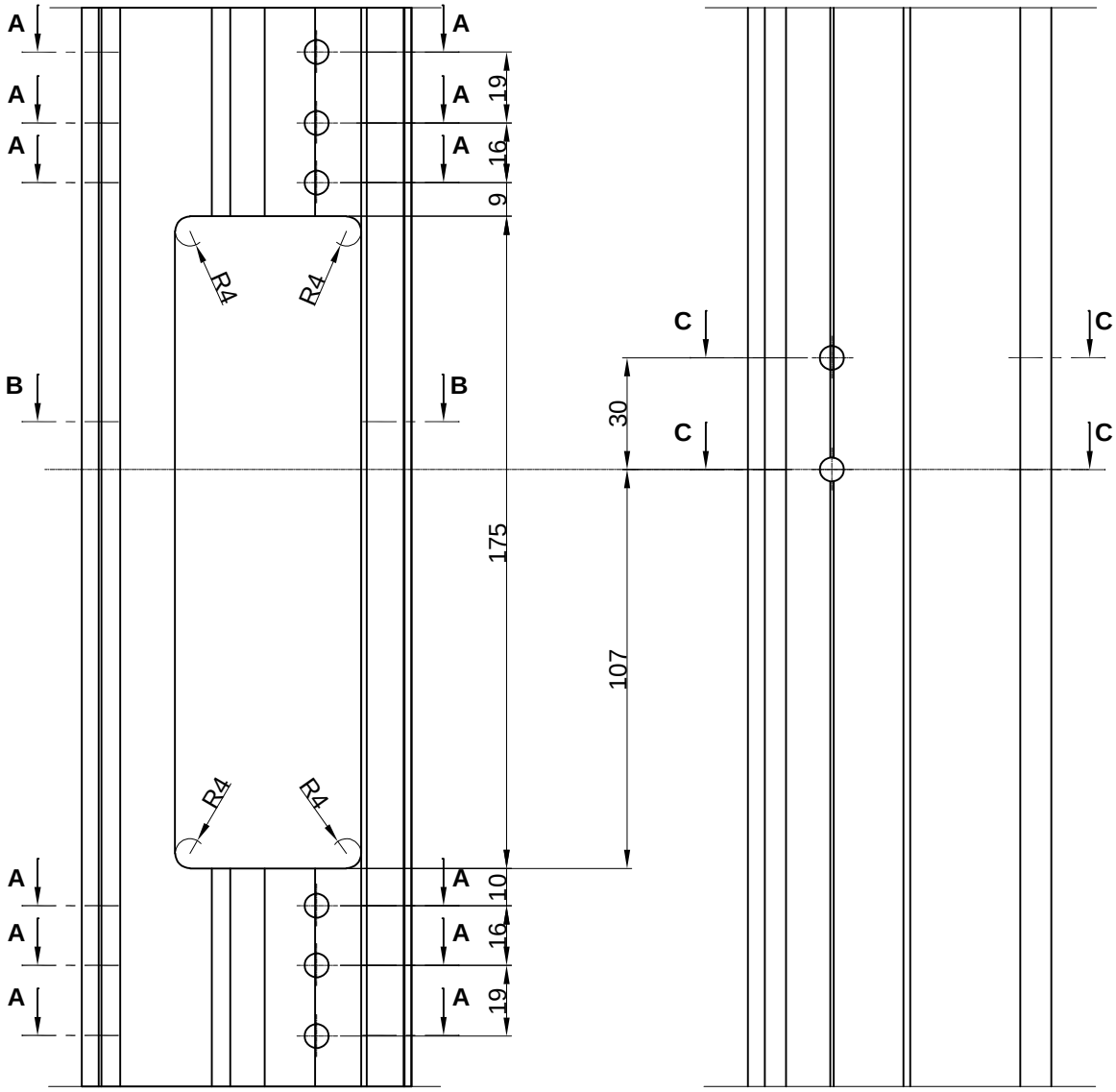
FT-0592F
C-C

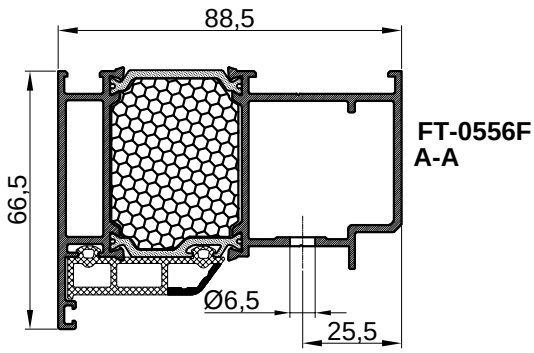




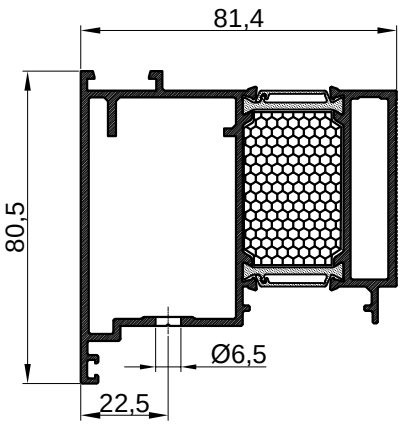
FT-0556F
B-B

115.016.01 **02** **03**		- Skrivena šarka FEAL-GIESE za vrata otvaranje unutra - Boje: 01- bijela; 02 - siva; 03 - crna - Concealed door hinge FEAL-GIESSE (door - inward opening) - Color: 01- white; 02 - gray; 03 - black

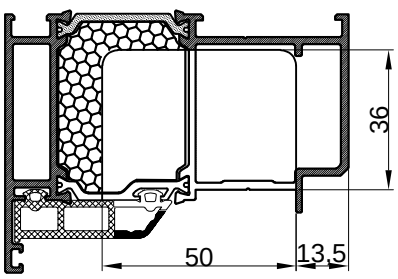




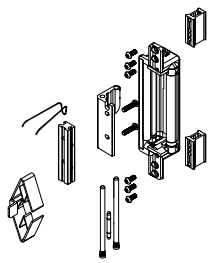
FT-0556F
A-A

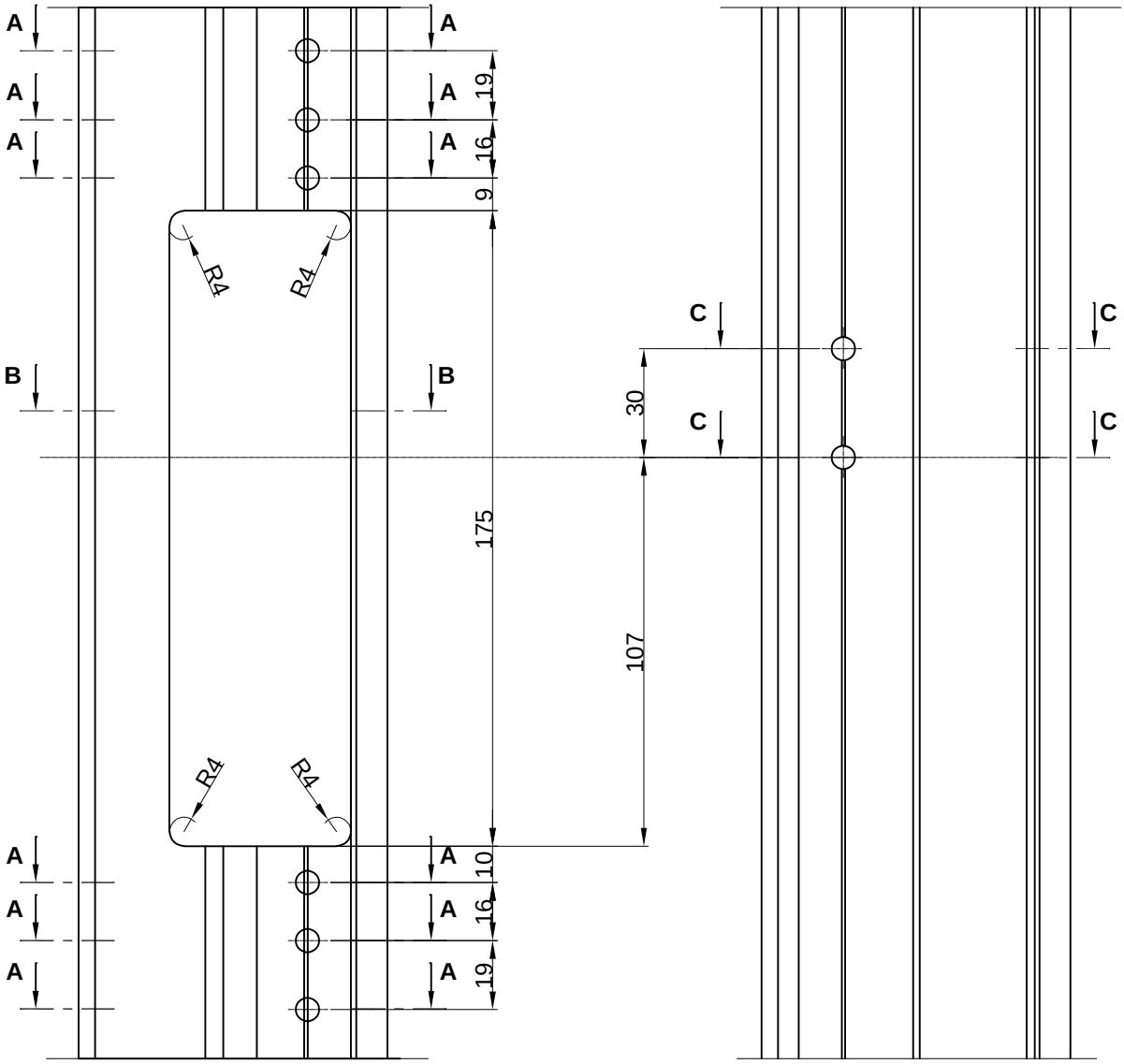


FT-0593F
C-C

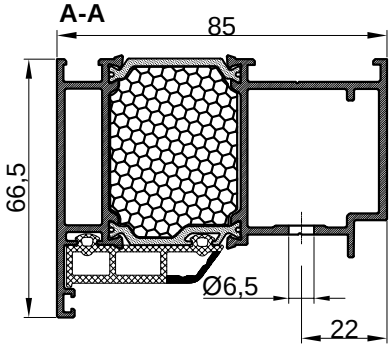


FT-0556F
B-B

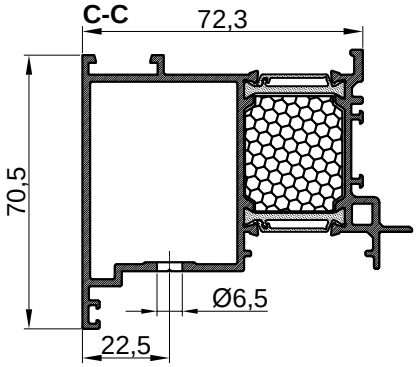
115.016.01 **02** **03**		- Skrivena šarka FEAL-GIESSE za vrata otvaranje unutra - Boje: 01- bijela; 02 - siva; 03 - crna - Concealed door hinge FEAL-GIESSE (door - inward opening) - Color: 01- white; 02 - gray; 03 - black



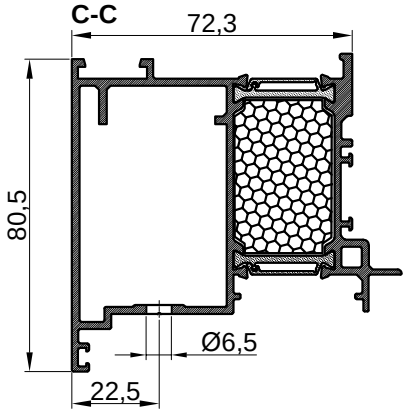
FT-0551 F
A-A

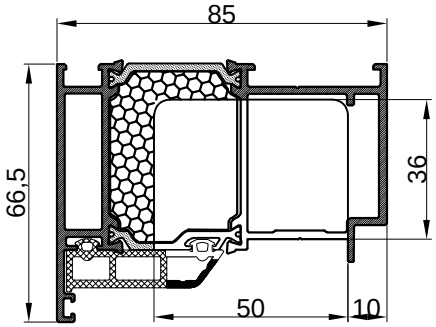


FT-0591 F
C-C

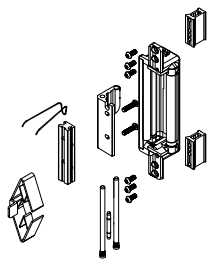


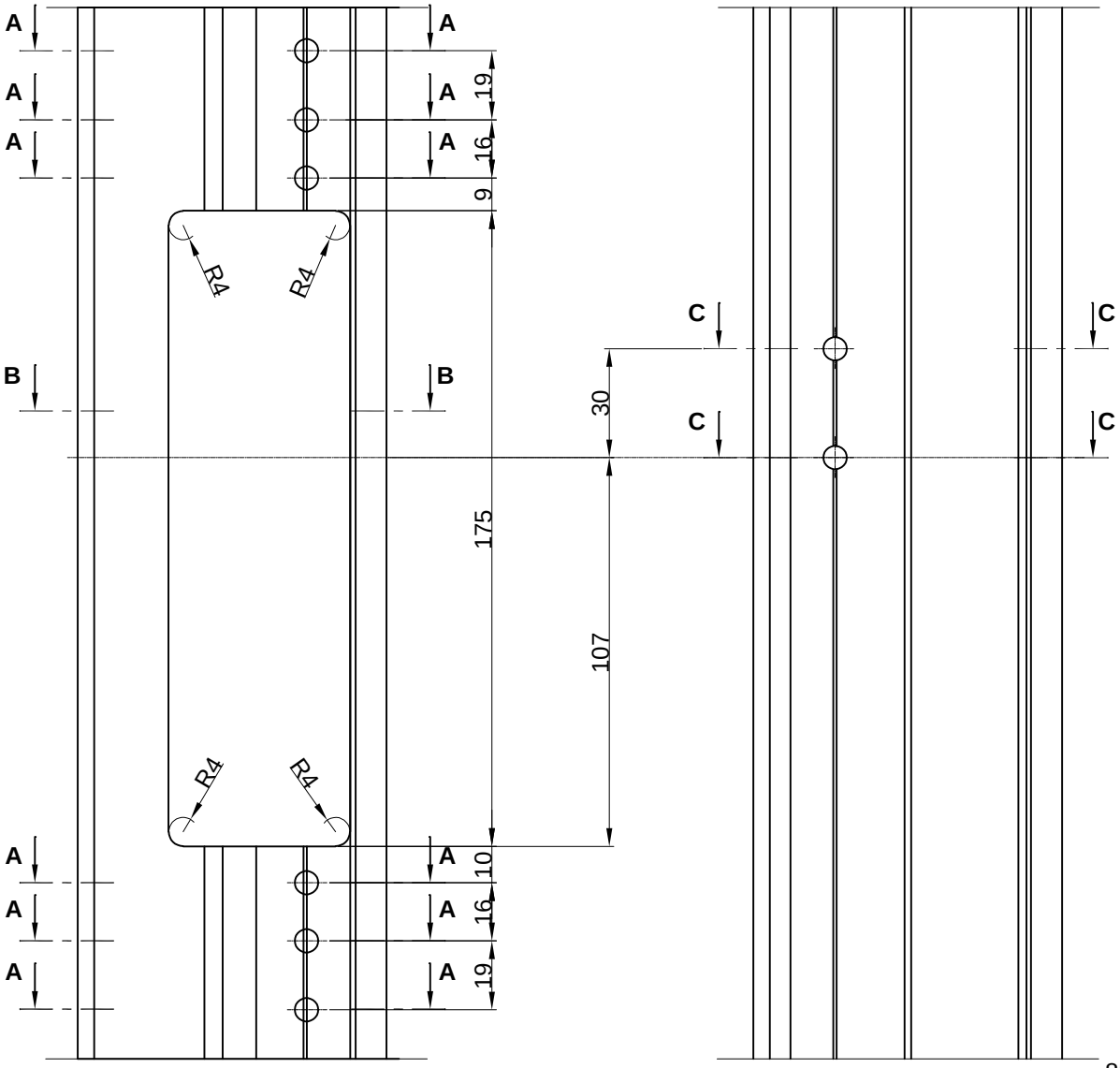
FT-0592F
C-C



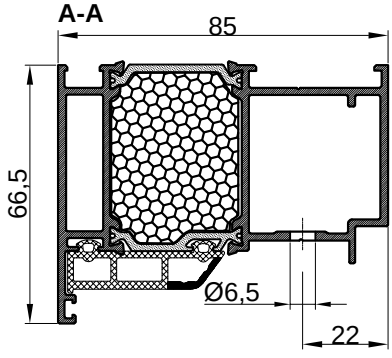


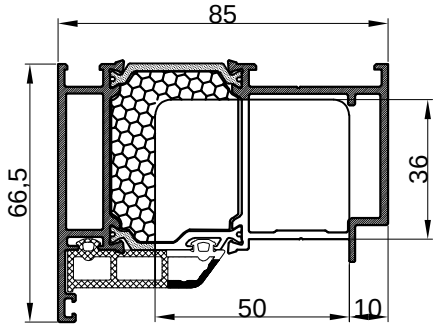
FT-0551F
B-B

115.016.01 **02** **03**		- Skrivena šarka FEAL-GIESSE za vrata otvaranje unutra - Boje: 01- bijela; 02 - siva; 03 - crna - Concealed door hinge FEAL-GIESSE (door - inward opening) - Color: 01- white; 02 - gray; 03 - black



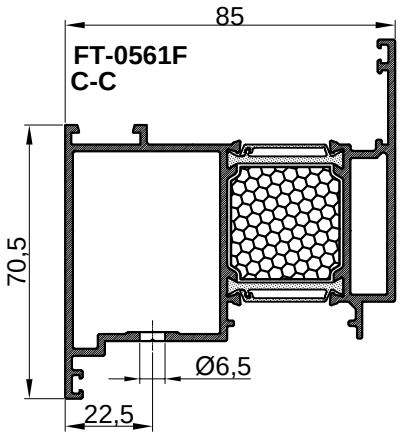
FT-0551 F
A-A



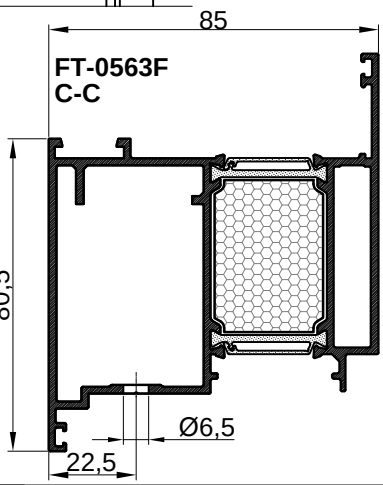


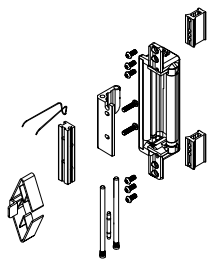
FT-0551F
B-B

FT-0561F
C-C

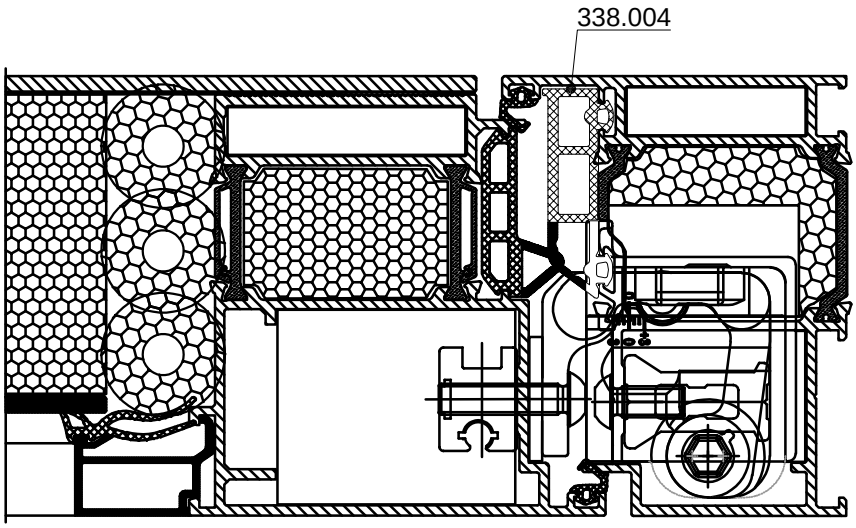


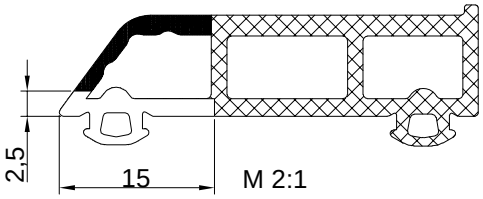
FT-0563F
C-C

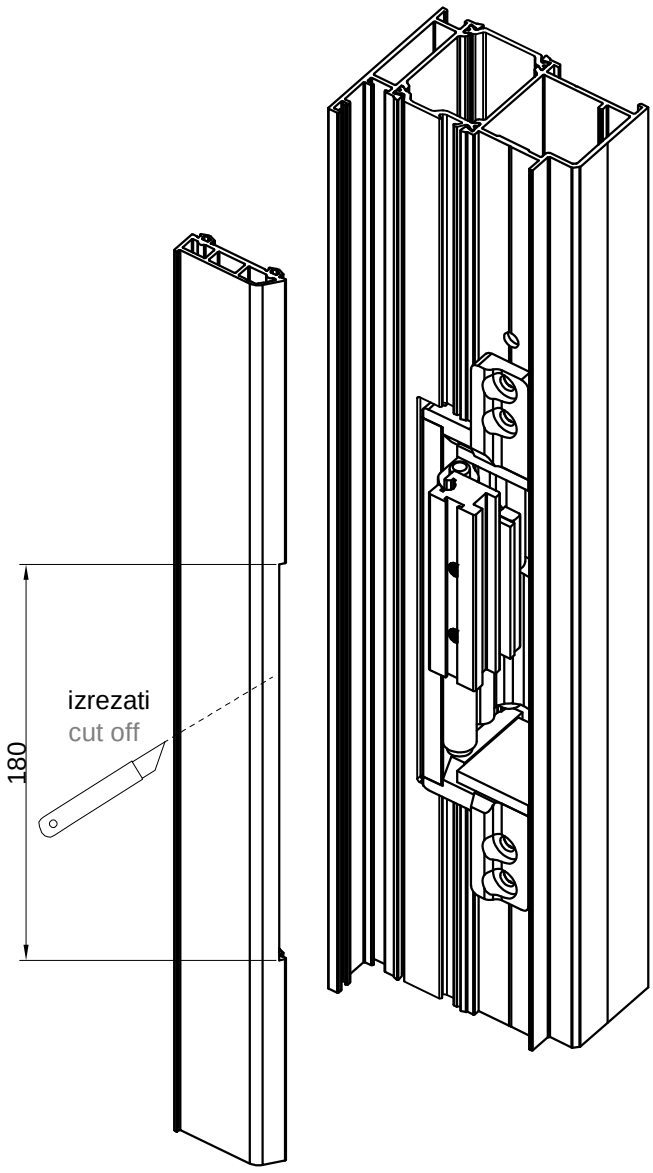


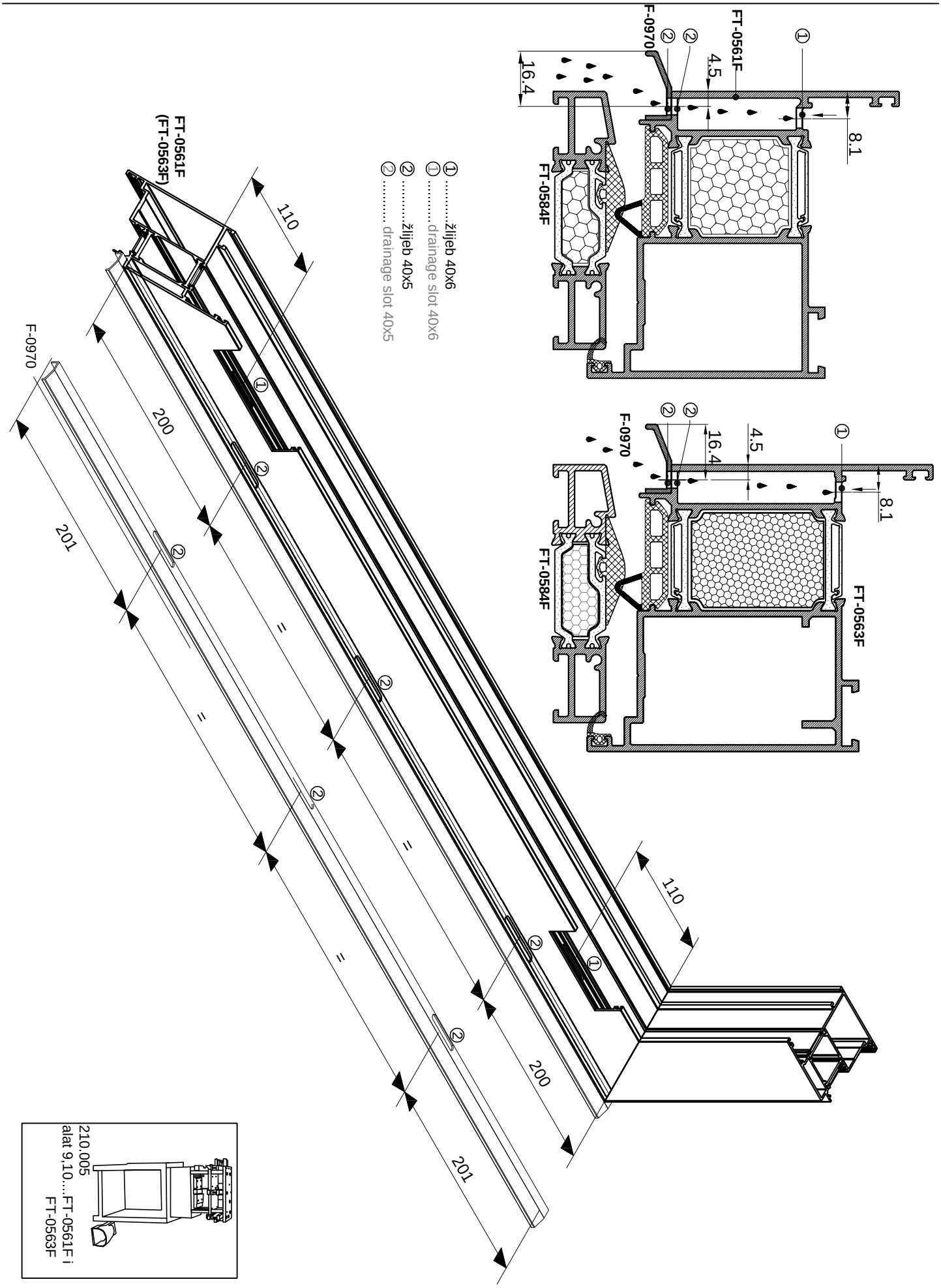
115.016.01 **02** **03**		- Skrivena šarka FEAL-GIESSE za vrata otvaranje unutra - Boje: 01- bijela; 02 - siva; 03 - crna - Concealed door hinge FEAL-GIESSE (door - inward opening) - Color: 01- white; 02 - gray; 03 - black

OBRADA BRTVE 338.004
-obrada brtve na poziciji ugradnje Feal-Giesse skrivene šarke 115.016
PROCESSING OF GASKET 338.004
-processing of gasket at Feal-Giesse concealed hinge installation position 115.016

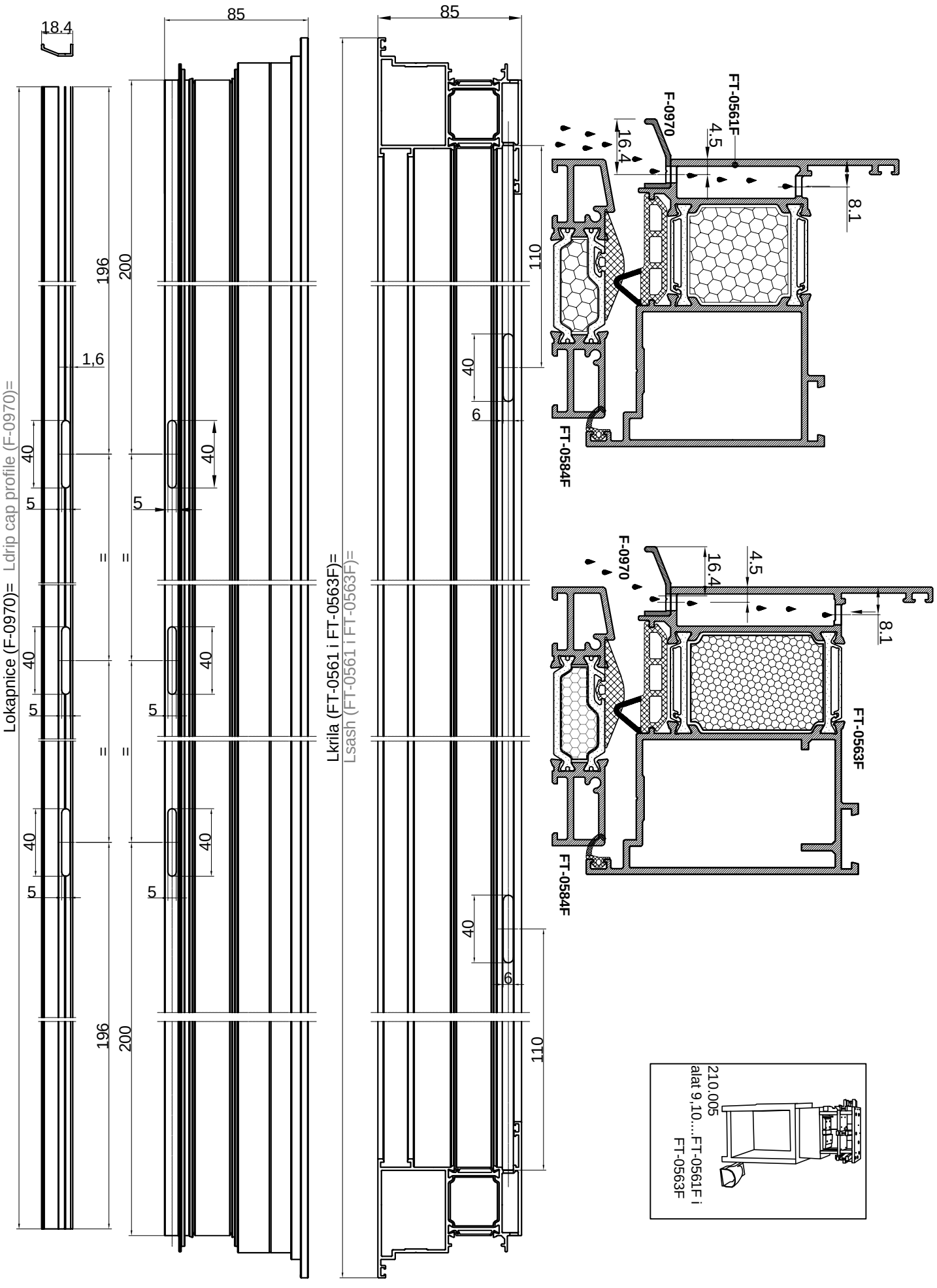


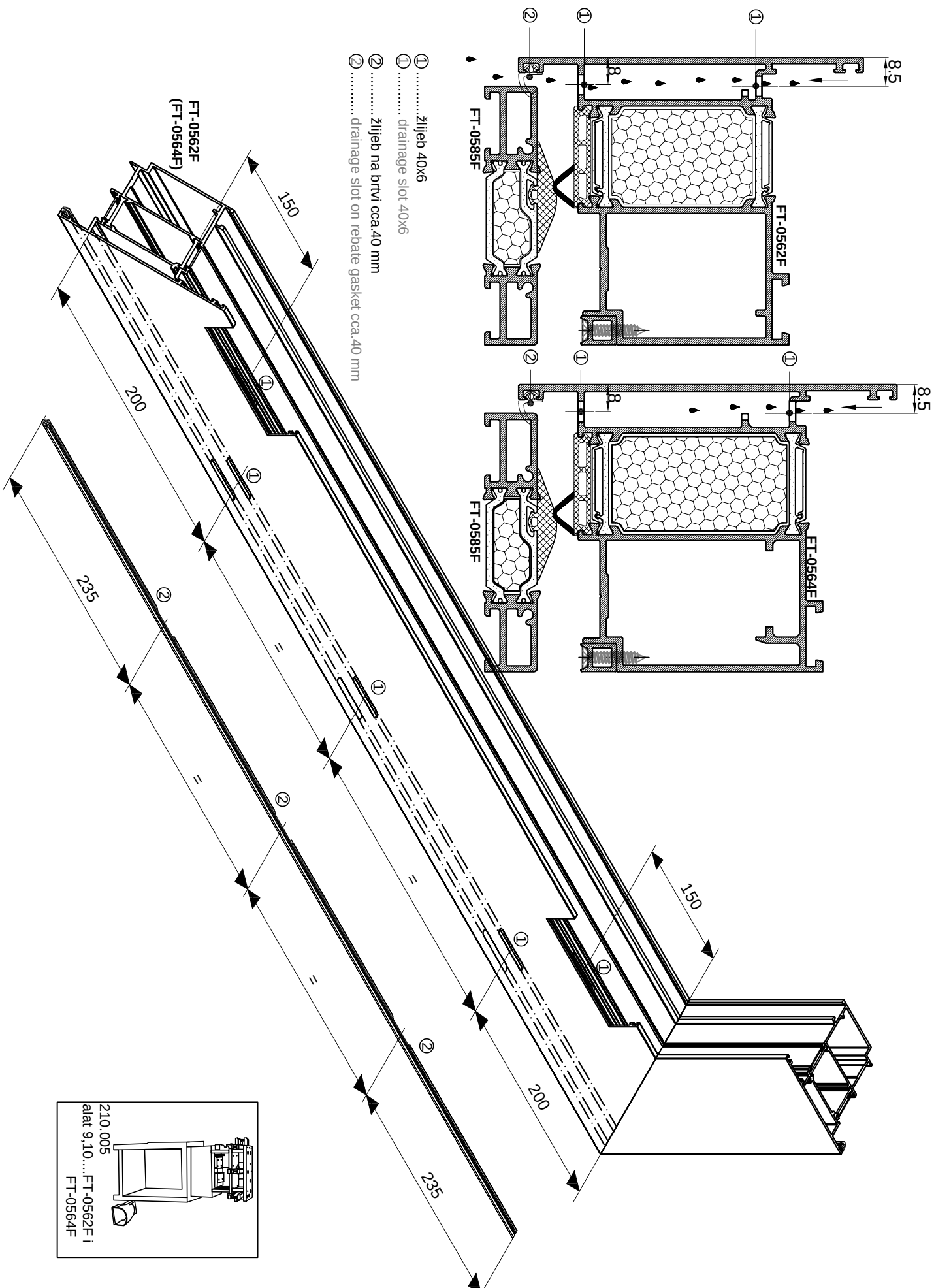




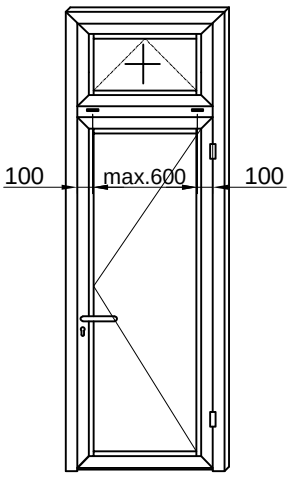

F-0970
FT-0561F
16.4
4.5
8.1
FT-0584F
FT-0563F
① ..... žlijeb 40x6
① ..... drainage slot 40x6
② ..... žlijeb 40x5
② ..... drainage slot 40x5
110
200
201
=

210.005
alat 9,10....FT-0561F i
FT-0563F

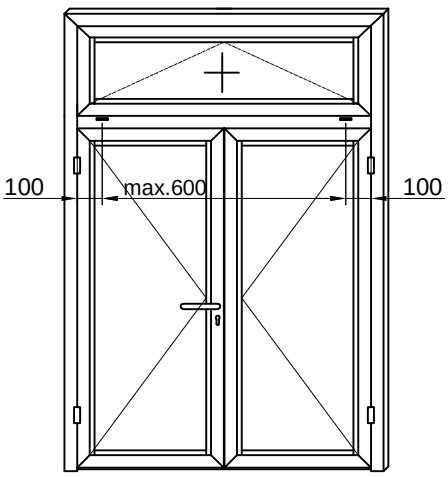

Lokapnice (F-0970)= Ldrip cap profile (F-0970)=
Lkrila (FT-0561 i FT-0563F)=
Lsash (FT-0561 i FT-0563F)=
18.4
85
85
196
200
1,6
40
5
110
6
F-0970
FT-0561F
16.4
4.5
8.1
FT-0584F
F-0970
16.4
4.5
8.1
FT-0563F
FT-0584F
210.005
alat 9,10....FT-0561F i
FT-0563F


① ..... žlijeb 40x6
① ..... drainage slot 40x6
② ..... žlijeb na brtvi cca.40 mm
② ..... drainage slot on rebate gasket cca.40 mm
FT-0562F
(FT-0564F)
FT-0585F
FT-0562F
FT-0585F
FT-0564F
8,5
150
200
235
=
210.005
alat 9,10...FT-0562F i
FT-0564F

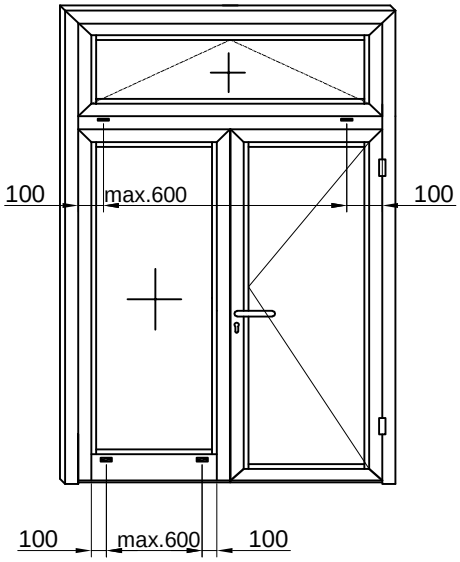
fiksno ili otvarajuće nadsvjetlo
fixed or tilt top light



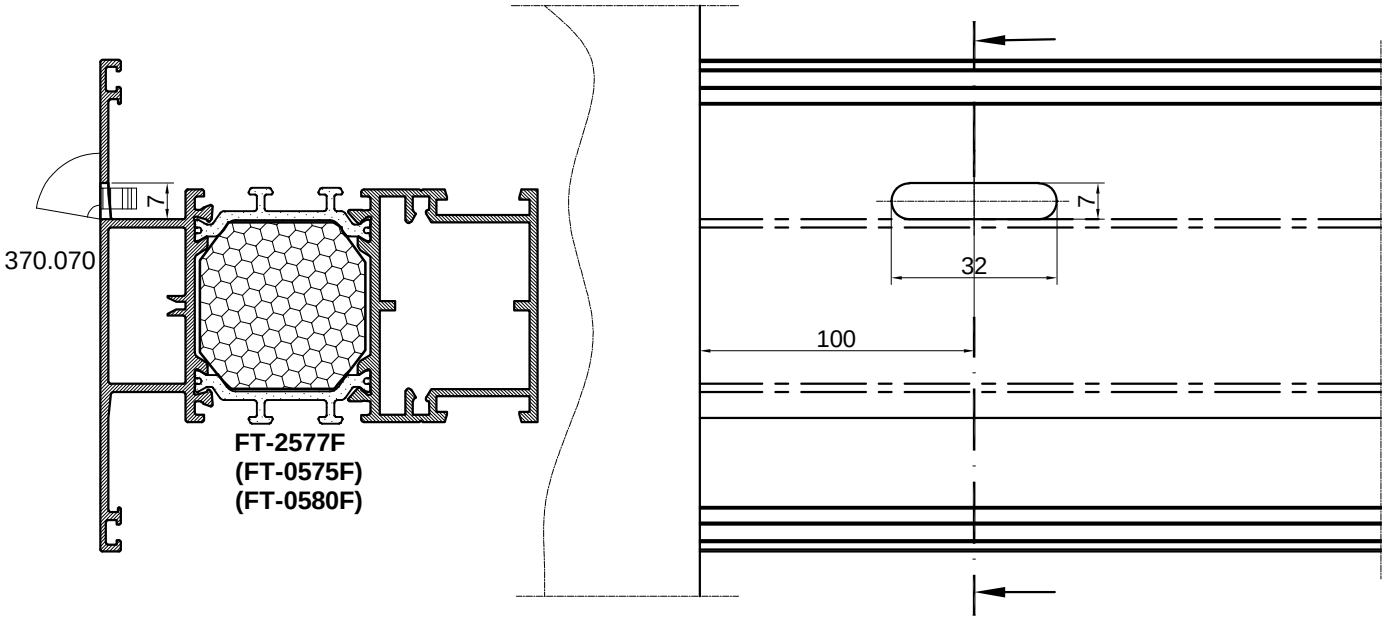
fiksno ili otvarajuće nadsvjetlo
fixed or tilt top light

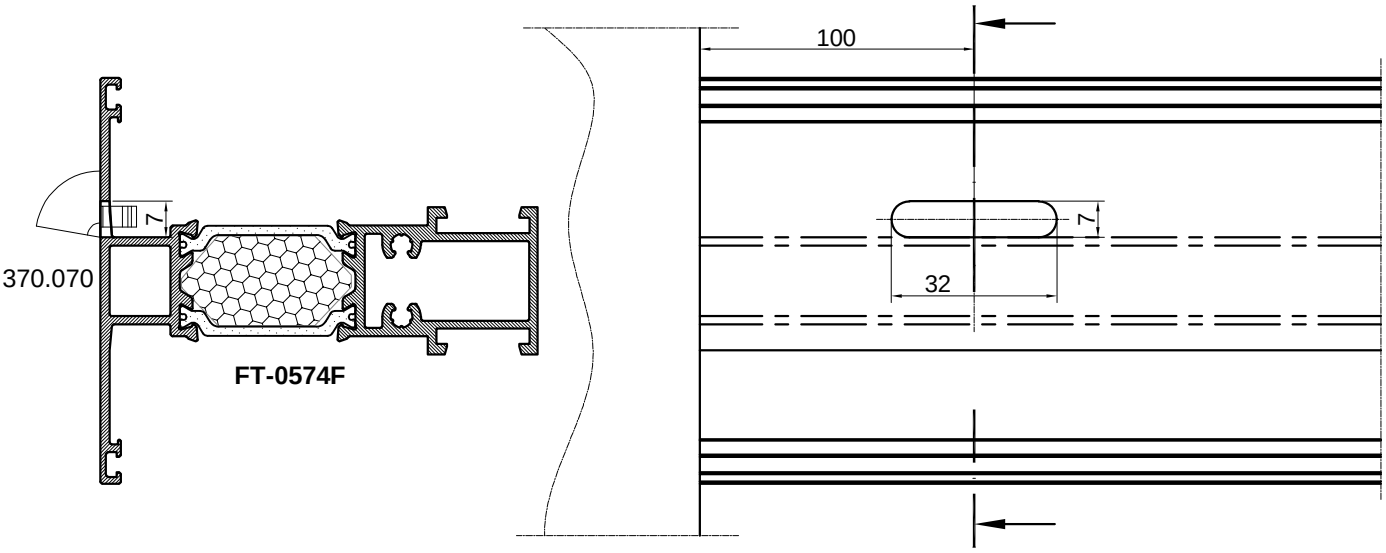


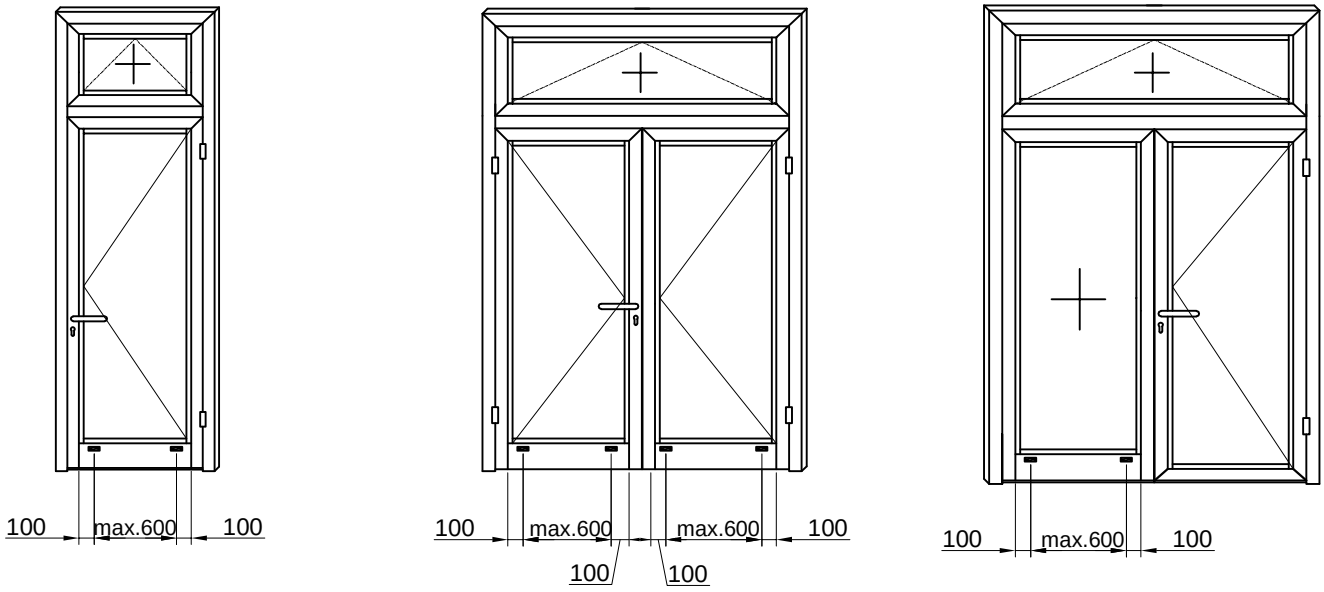
fiksno ili otvarajuće nadsvjetlo
fixed or tilt top light



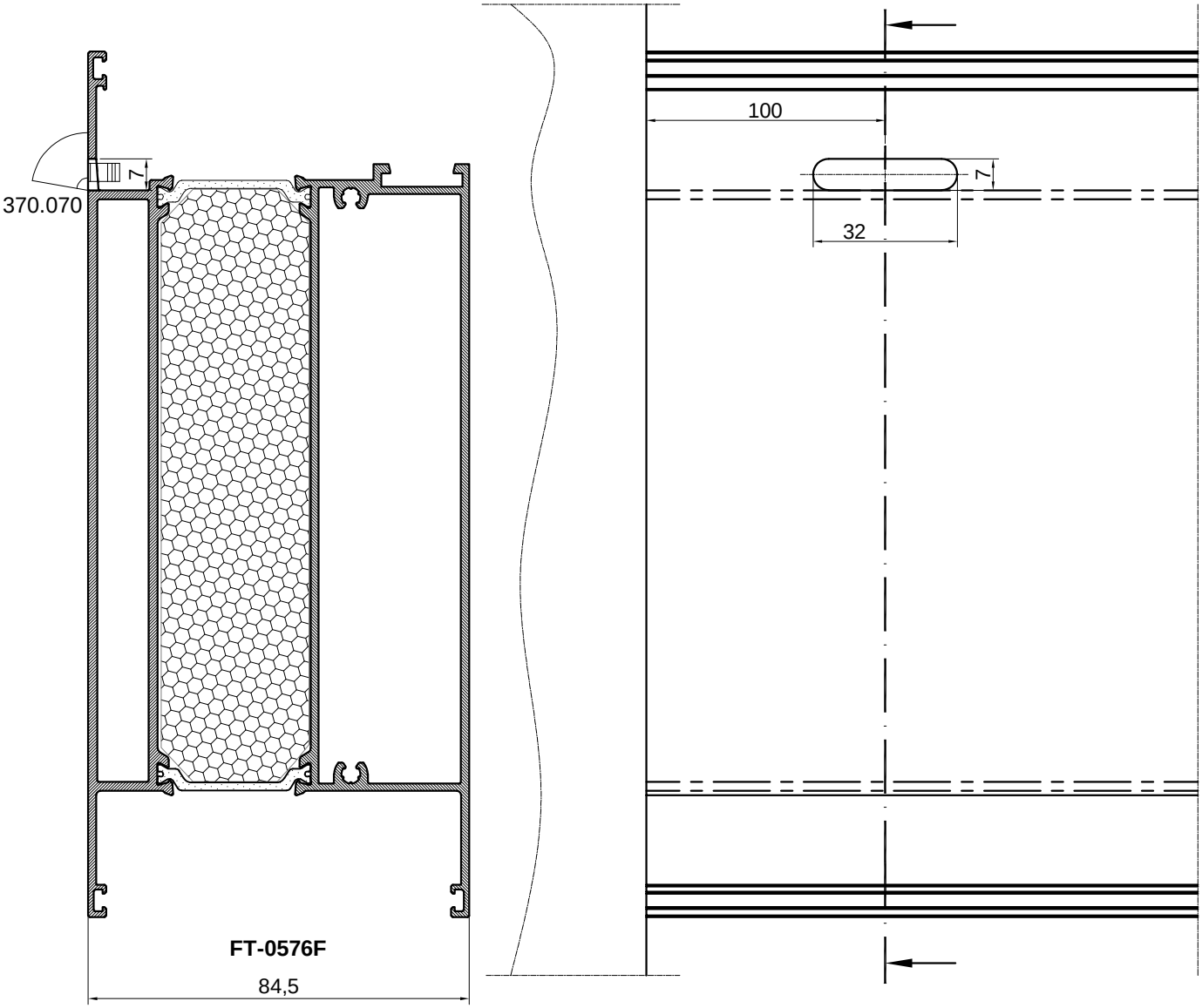
OBRADA NA PROFILIMA PREČKI ZA ODVOD KAPLJEVINA I UGRADNJA PVC ČEPA 370.070
PROCESSING OF TRANSOM PROFILE FOR WATER DRAINAGE AND MONTAGE PVC CAPS 373.003

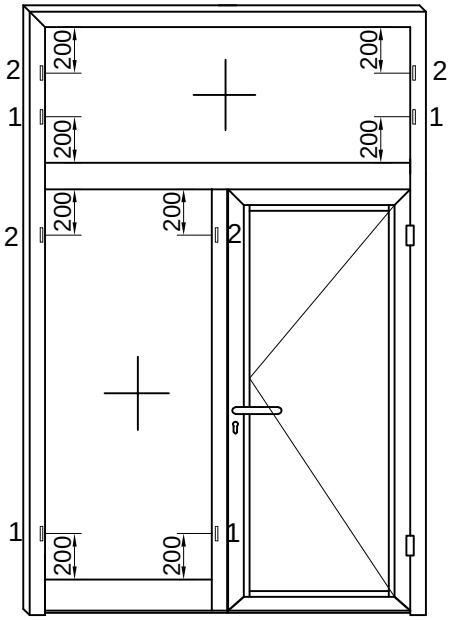






OBRADA NA PROFILIMA PREČKI ZA ODVOD KAPLJEVINA I UGRADNJA PVC ČEPA 370.070
PROCESSING OF TRANSOM PROFILE FOR WATER DRAINAGE AND MONTAGE PVC CAPS 373.003

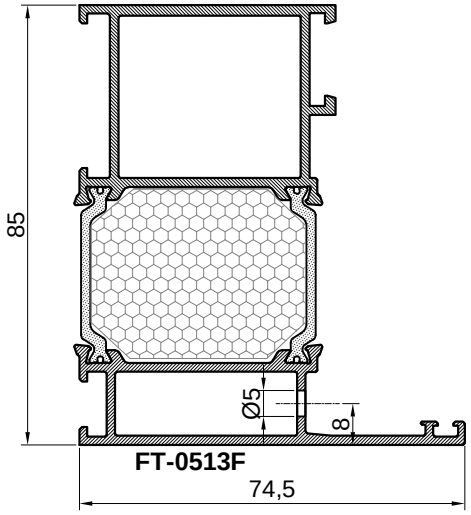


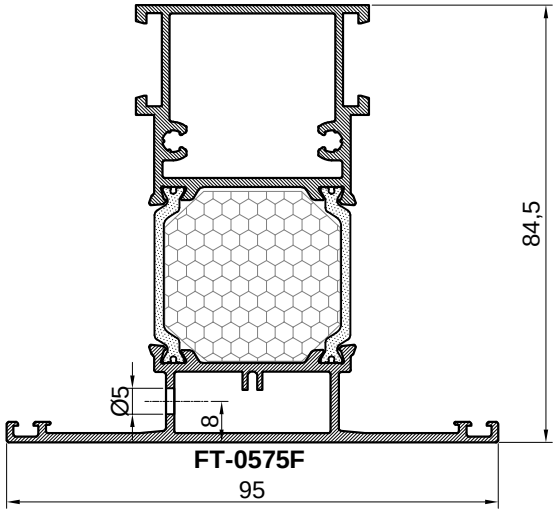


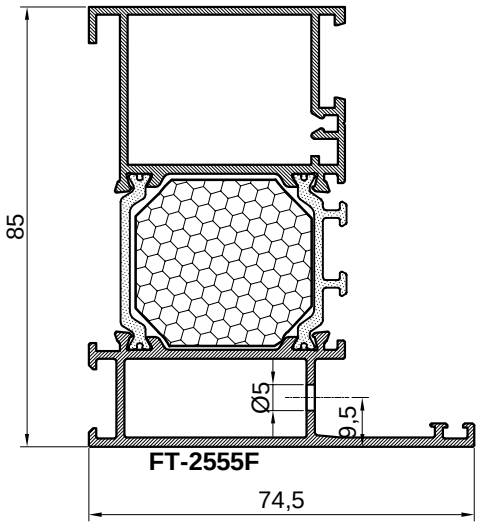
Obrada profila za ventiliranje komora
Processing profile for vent chambers

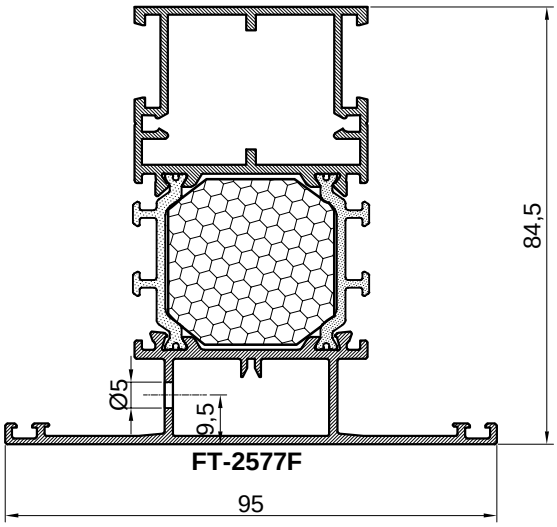
1 Obrada profila rama i prečke zbog ventiliranja komora (rupa Ø5 mm)
Processing profile frame and mullion for vent chambers (hole Ø5 mm)

2 Obrada profila rama i prečke zbog ventiliranja komora (žlijeb 20x5)
Processing profile frame and mullion for vent chambers (groove 20x5)

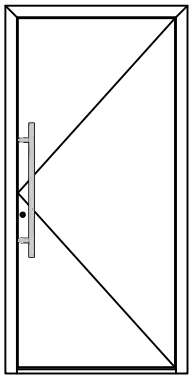


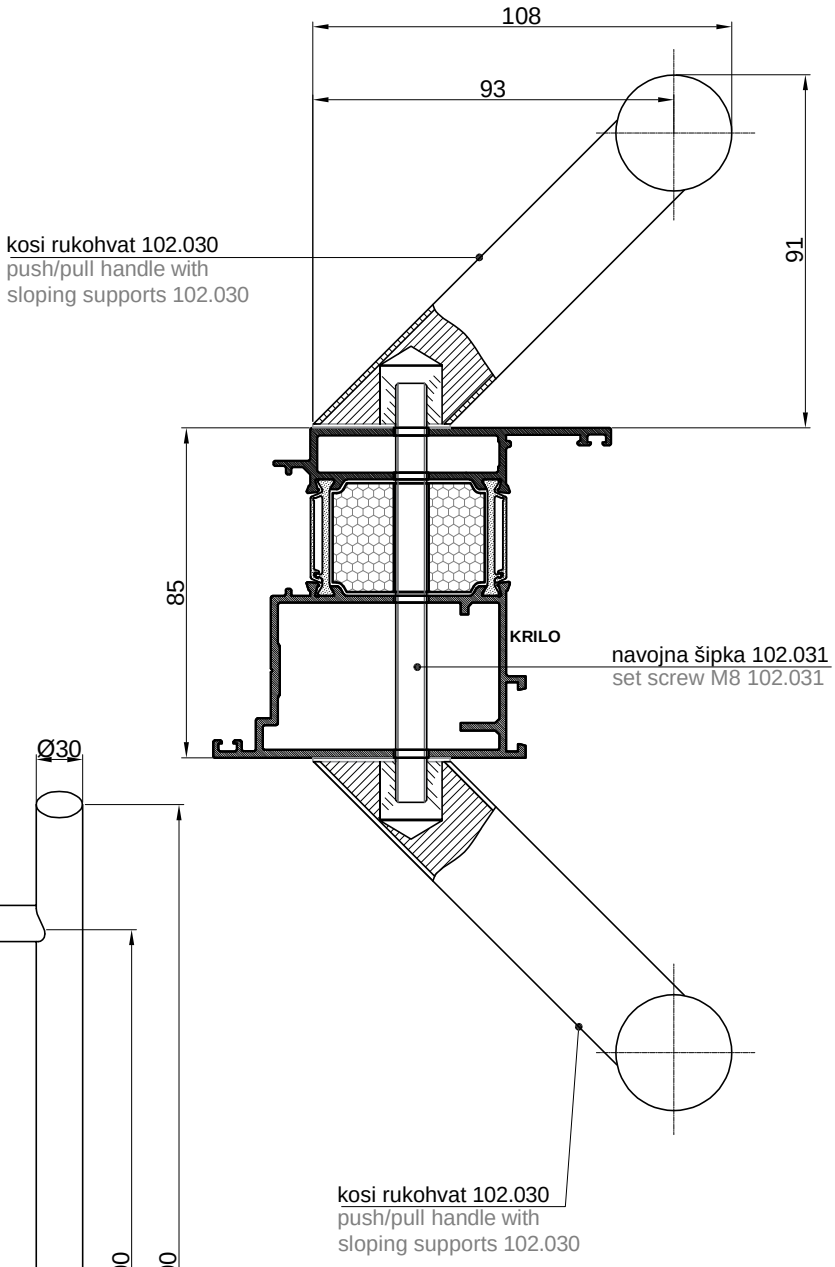


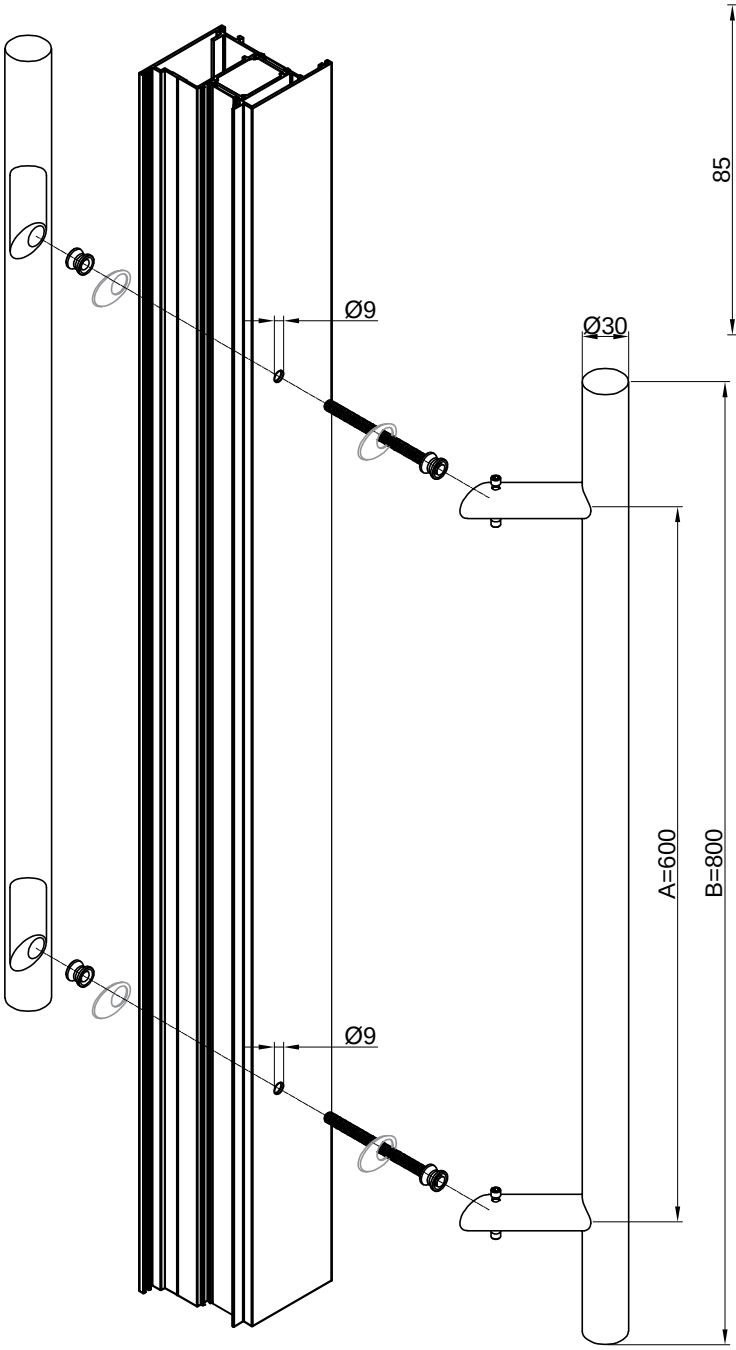


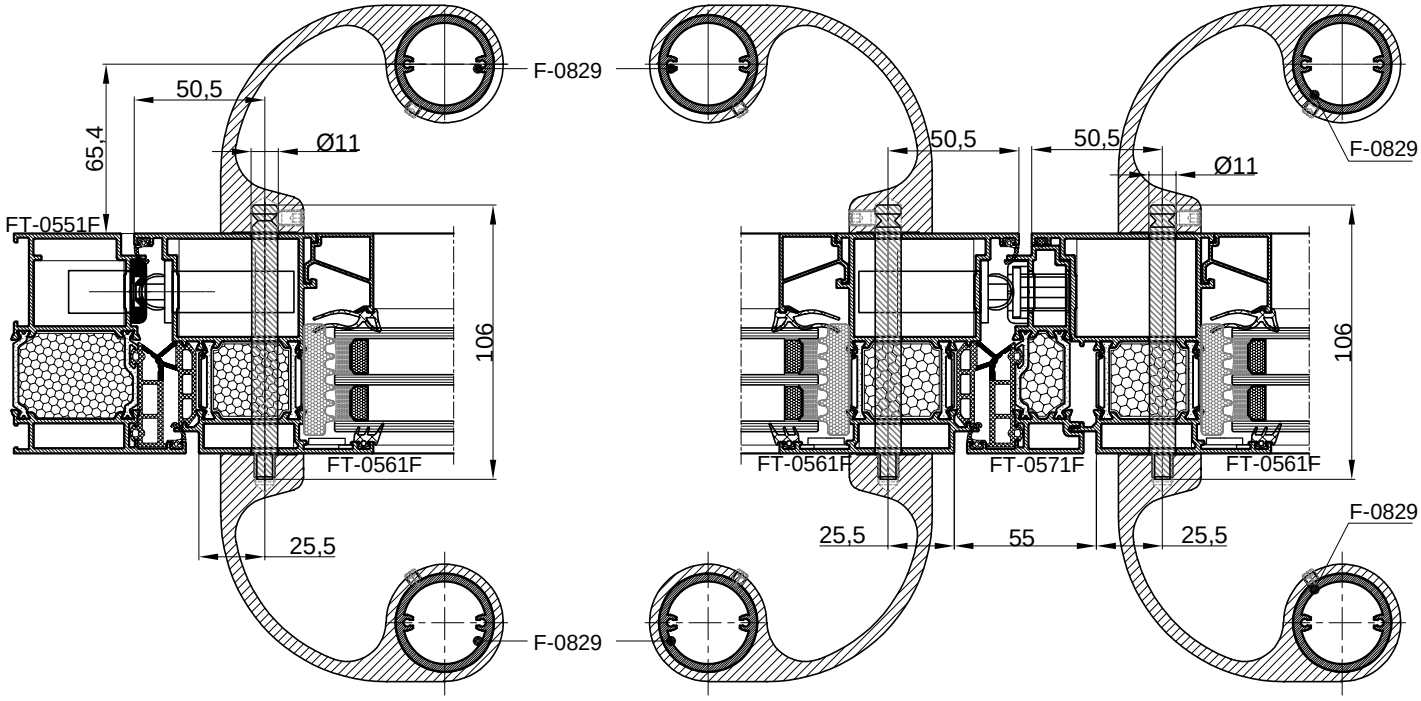


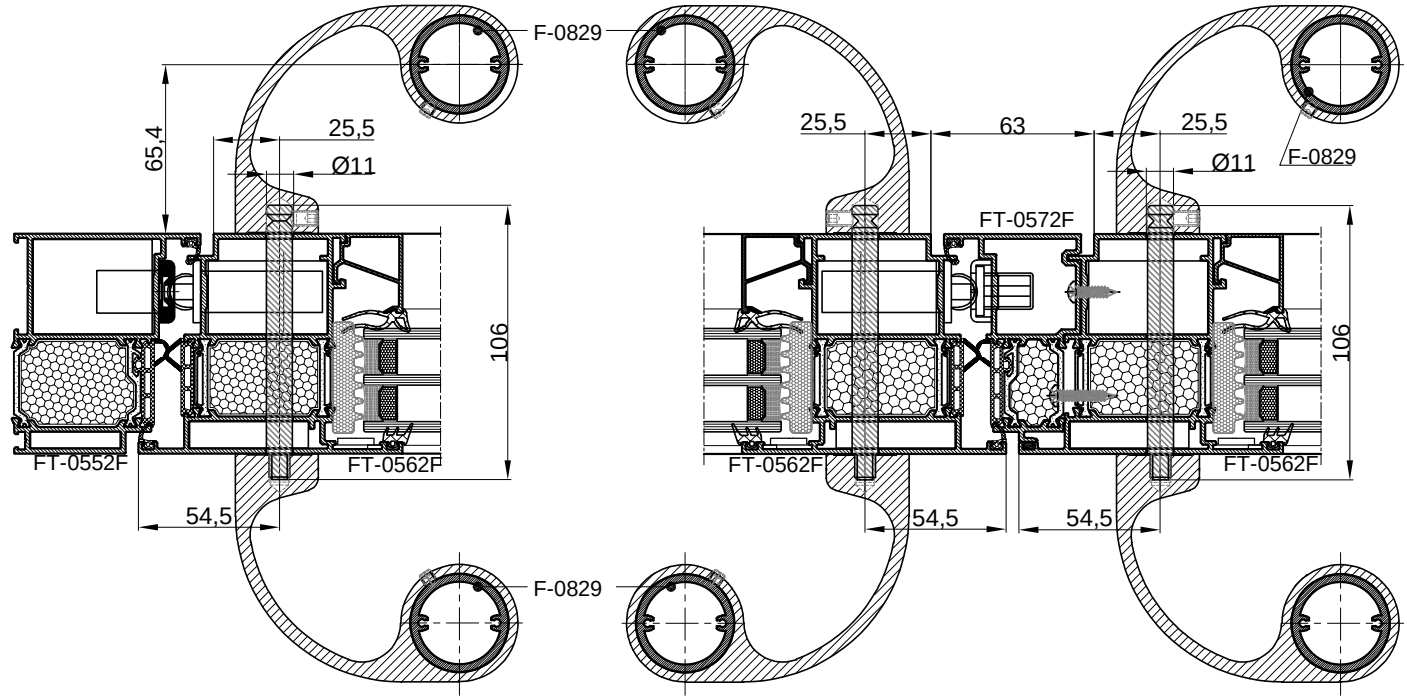
	Mjera "A" Dimension "A"	Mjera "B" Dimension "B"	Oznaka FEAL FEAL code	Oznaka proizvođača Manufacturer code
1	600	800	102.030	B-78820-0C-0-8

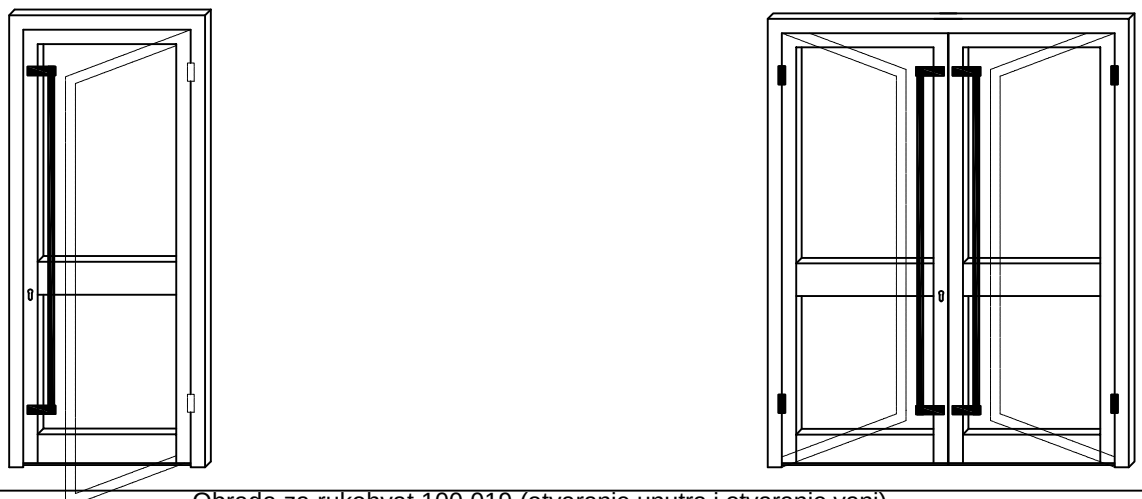


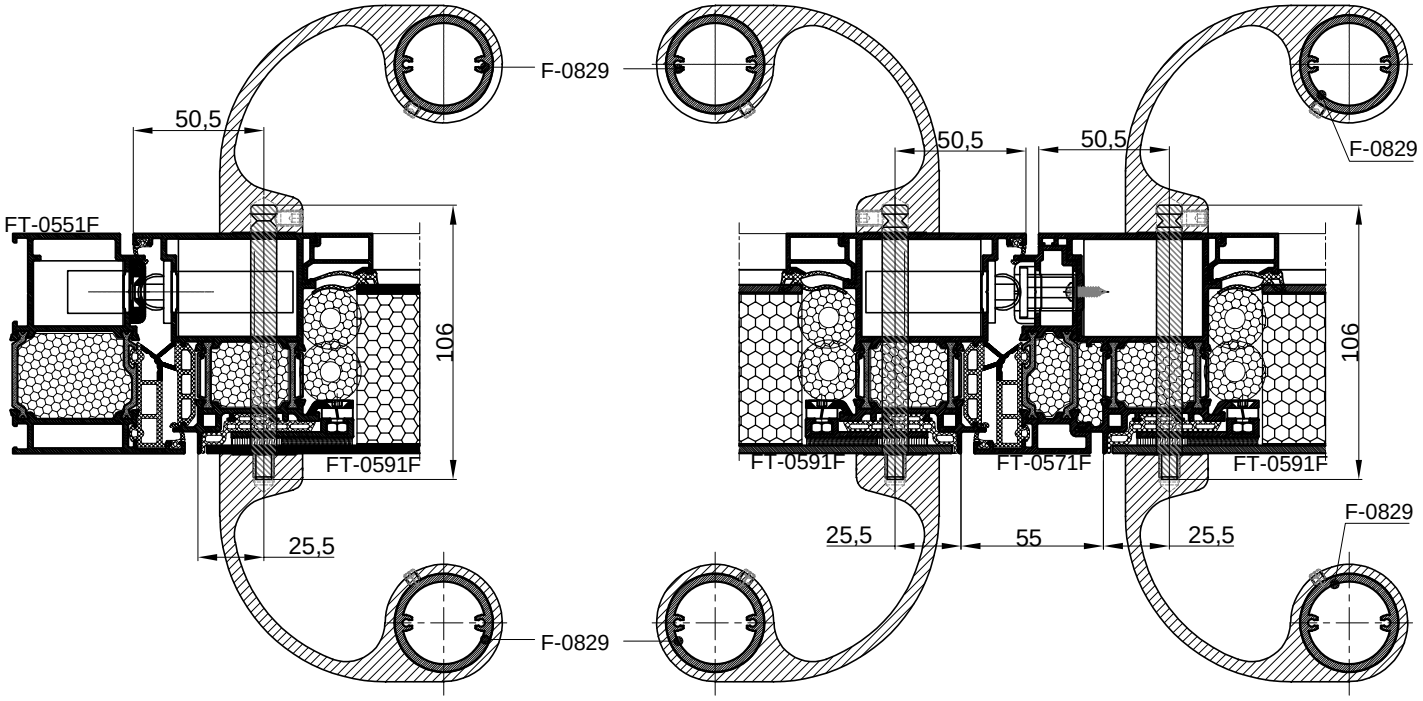


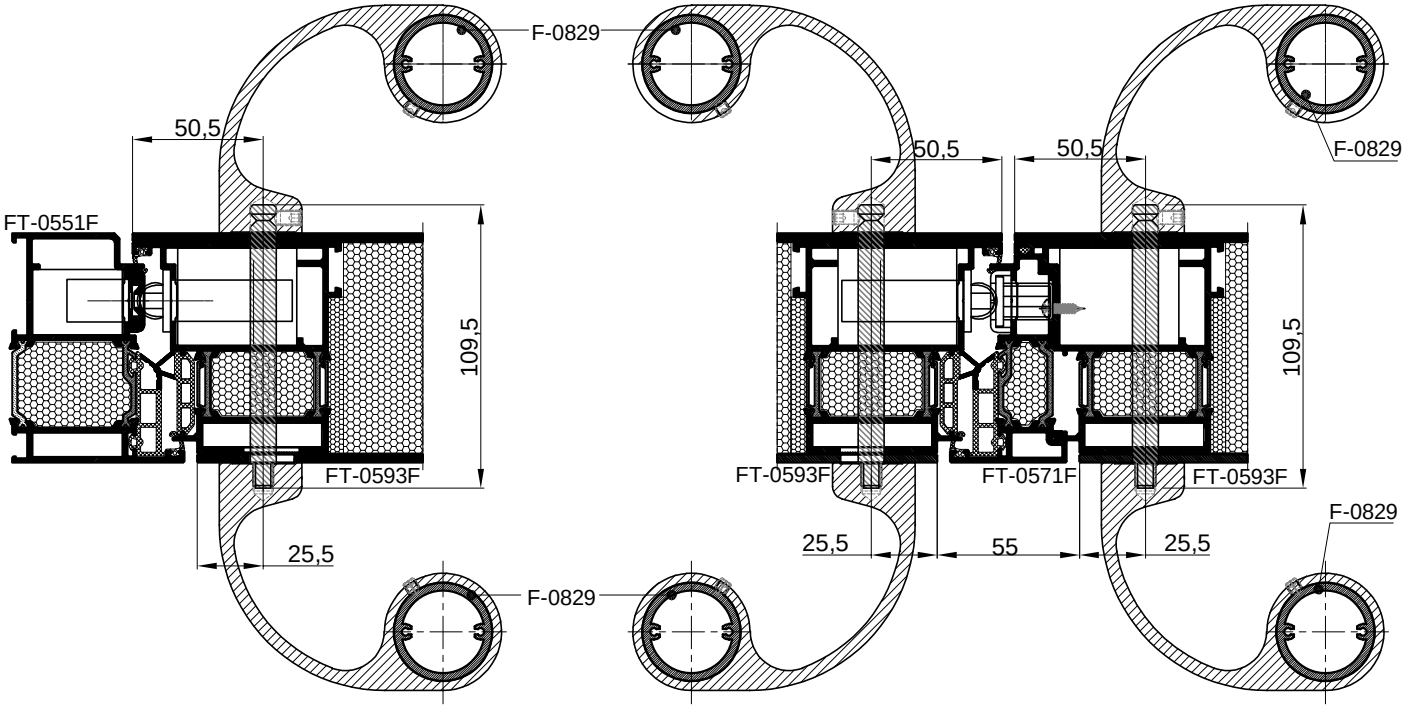


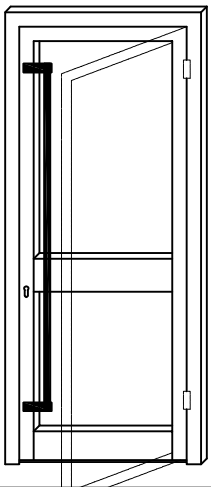

F-0829
50,5
65,4
Ø11
FT-0551F
106
FT-0561F
25,5
F-0829
50,5
50,5
Ø11
F-0829
106
FT-0561F
FT-0571F
FT-0561F
25,5
55
25,5
F-0829

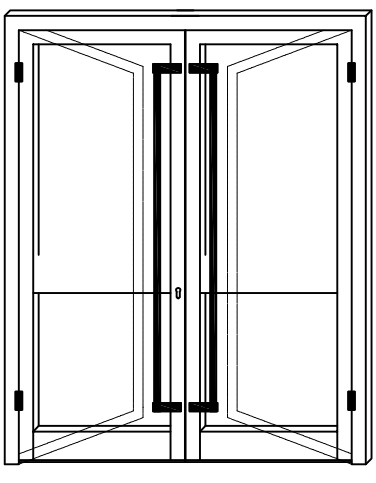

F-0829
65,4
25,5
Ø11
106
FT-0552F
FT-0562F
54,5
F-0829
25,5
63
25,5
Ø11
F-0829
FT-0572F
106
FT-0562F
FT-0562F
54,5
54,5
F-0829

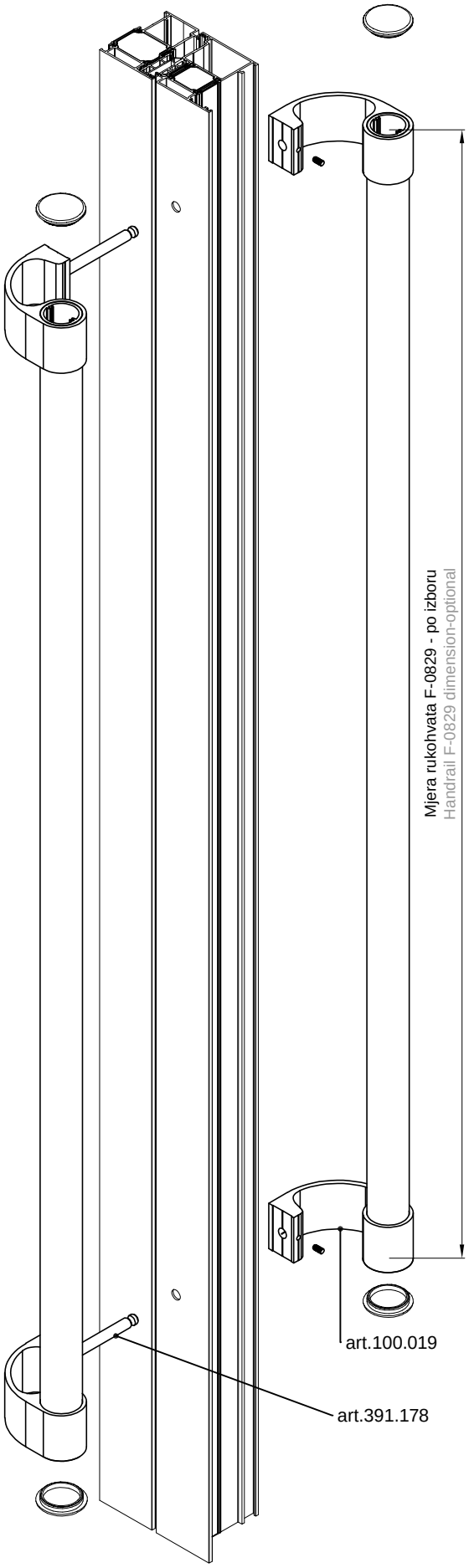


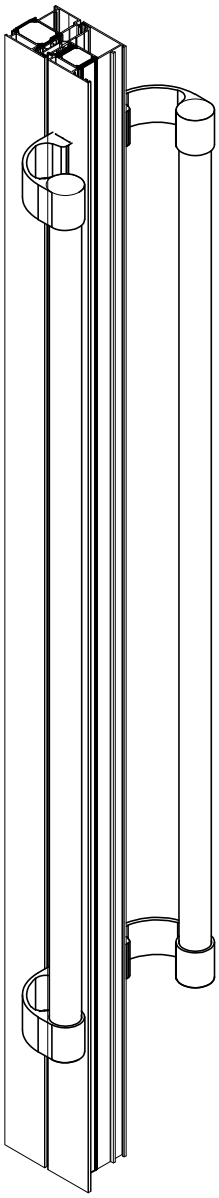

F-0829
50,5
FT-0551F
106
FT-0591F
25,5
F-0829
50,5
50,5
F-0829
106
FT-0591F
FT-0571F
FT-0591F
25,5
55
25,5
F-0829


F-0829
50,5
FT-0551F
109,5
FT-0593F
25,5
F-0829
50,5
50,5
F-0829
109,5
FT-0593F
FT-0571F
FT-0593F
25,5
55
25,5
F-0829

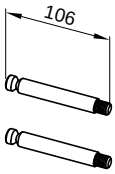




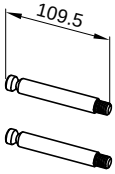




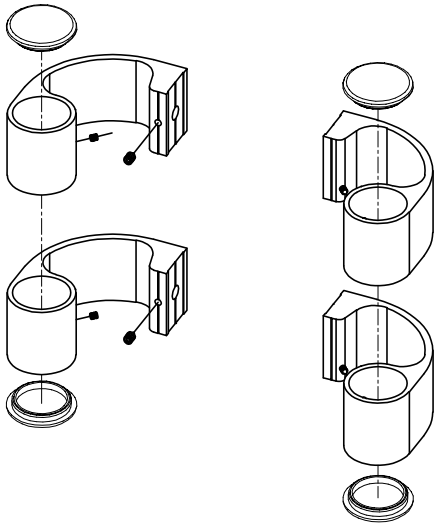
art. 391.178



art. 391.180
obostrani lim
(both side sash)

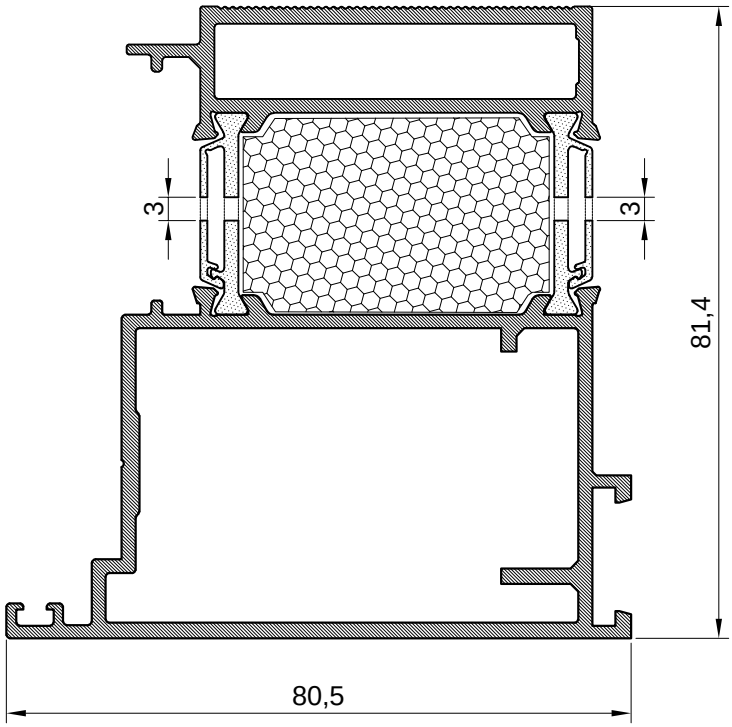


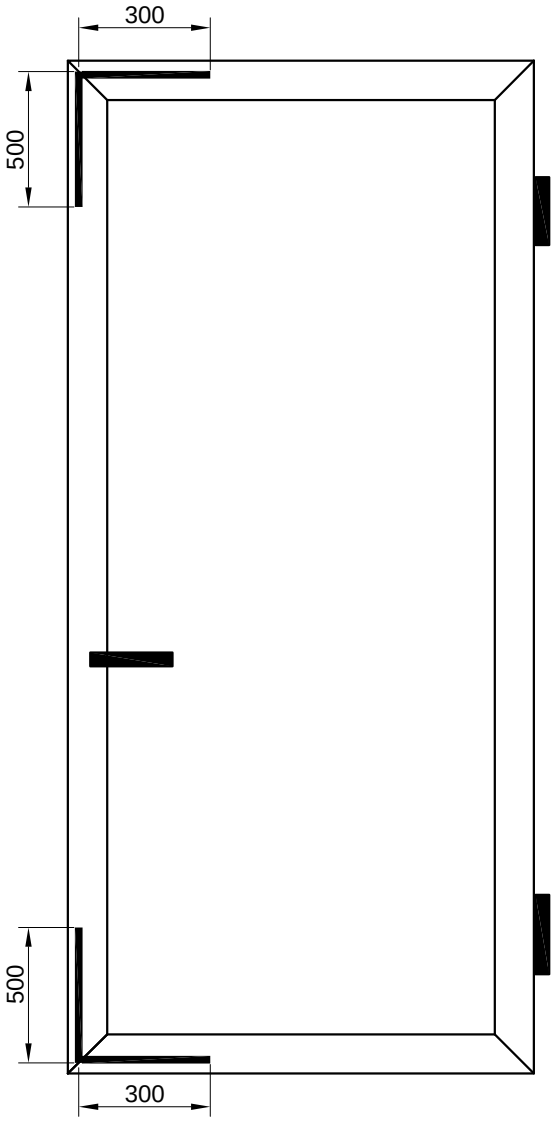
art. 100.019



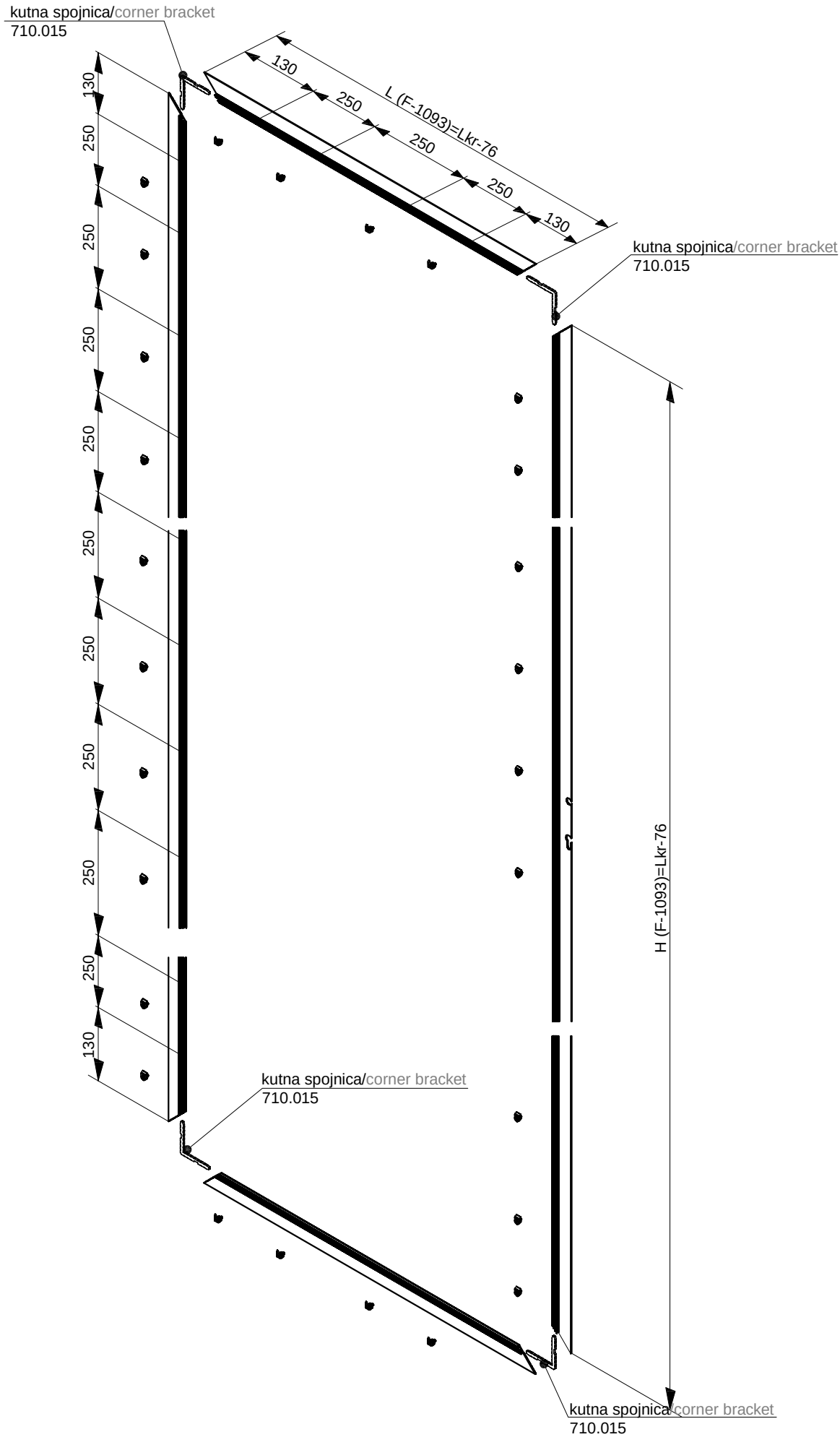
Izrezivanje termo štapića (poliamida) radi kompenziranja širenja profila
Cutting thermo sticks (polyamide) to compensate profile spreading

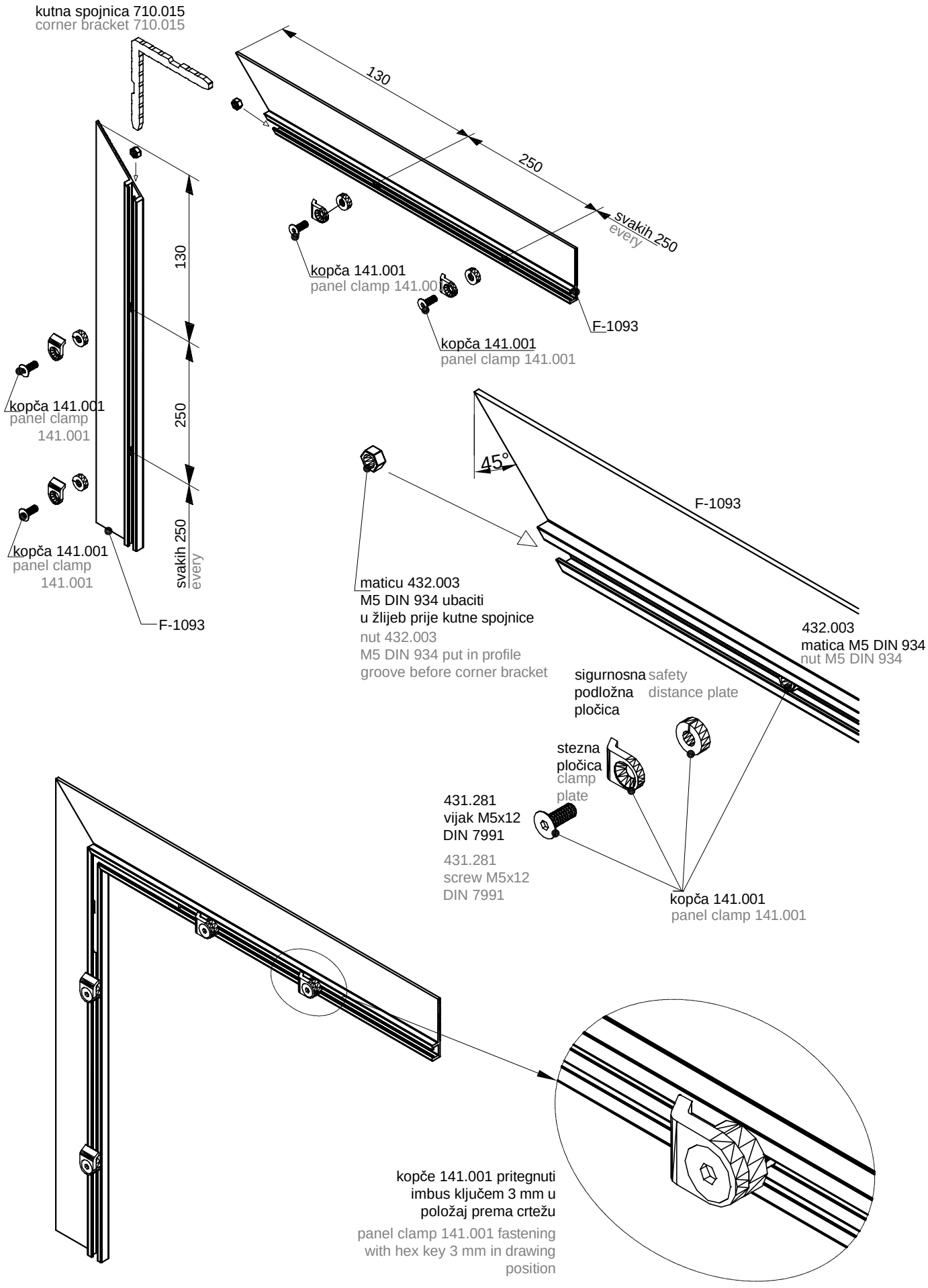
Profil krila-VP vrata (obostrano ravni lim)
Sash profile -VP door (both side hidden sash)

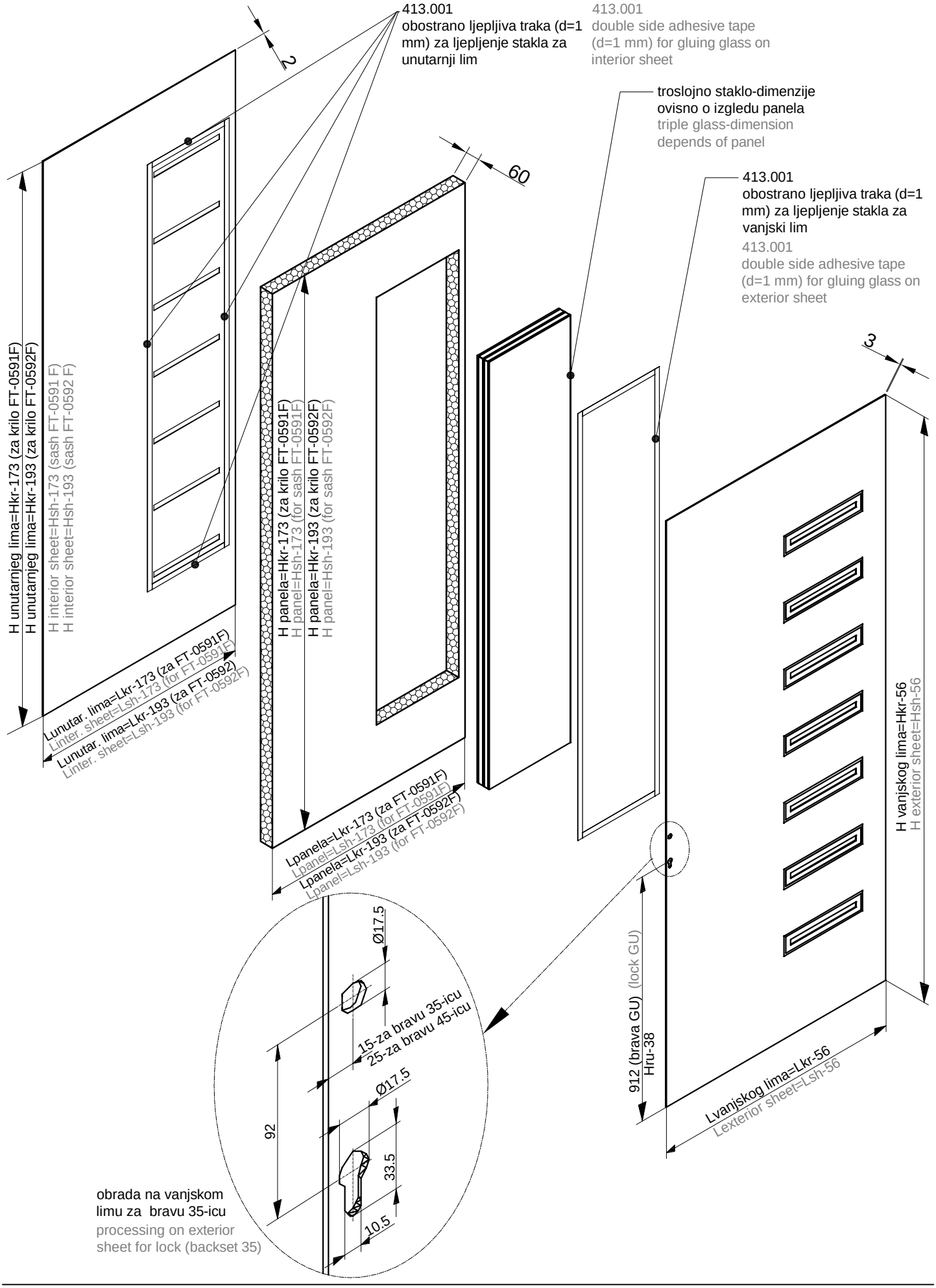


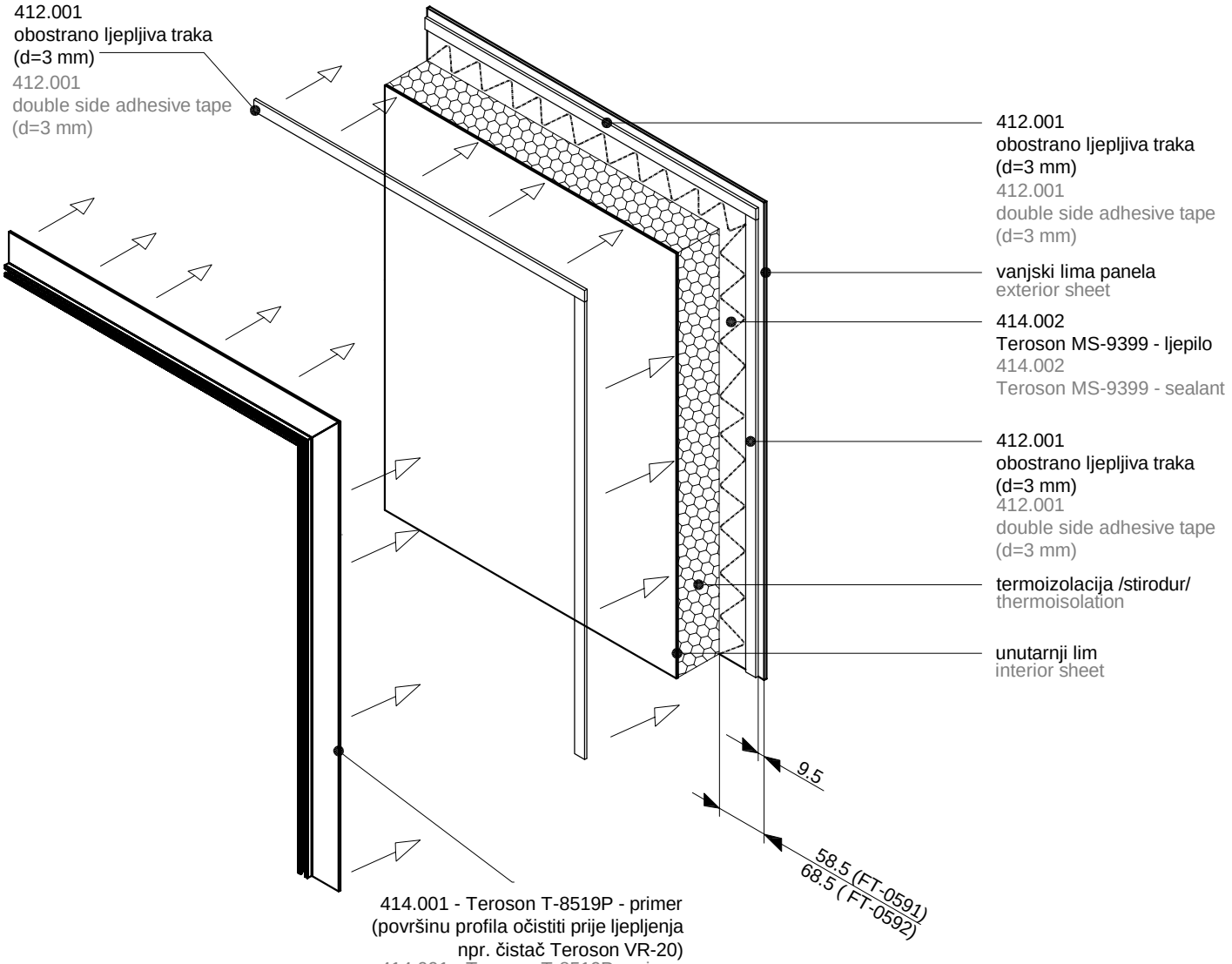


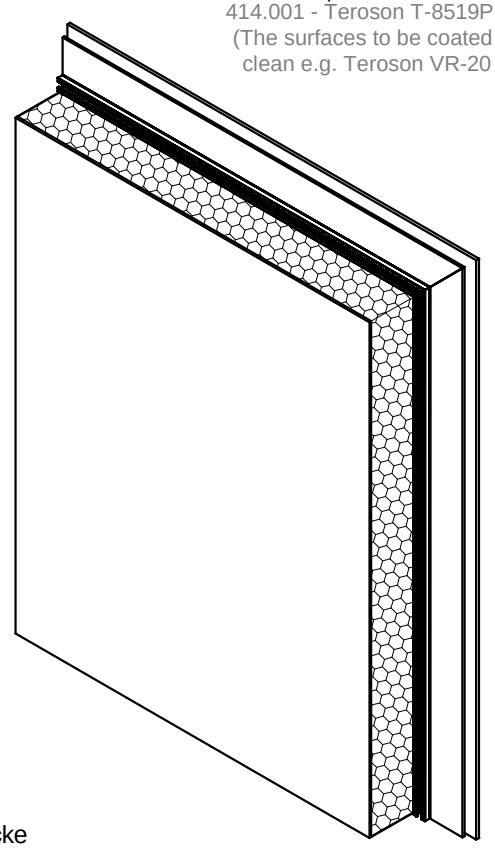
Pozicija izrezivanja termo štapića(poliamida) na krilu
Position of cutting thermo sticks (polyamide) on sash


kutna spojnica/corner bracket
710.015
130
250
250
250
250
250
250
250
250
250
250
130
L (F-1093)=Lkr-76
130
250
250
250
kutna spojnica/corner bracket
710.015
H (F-1093)=Lkr-76
kutna spojnica/corner bracket
710.015
kutna spojnica/corner bracket
710.015

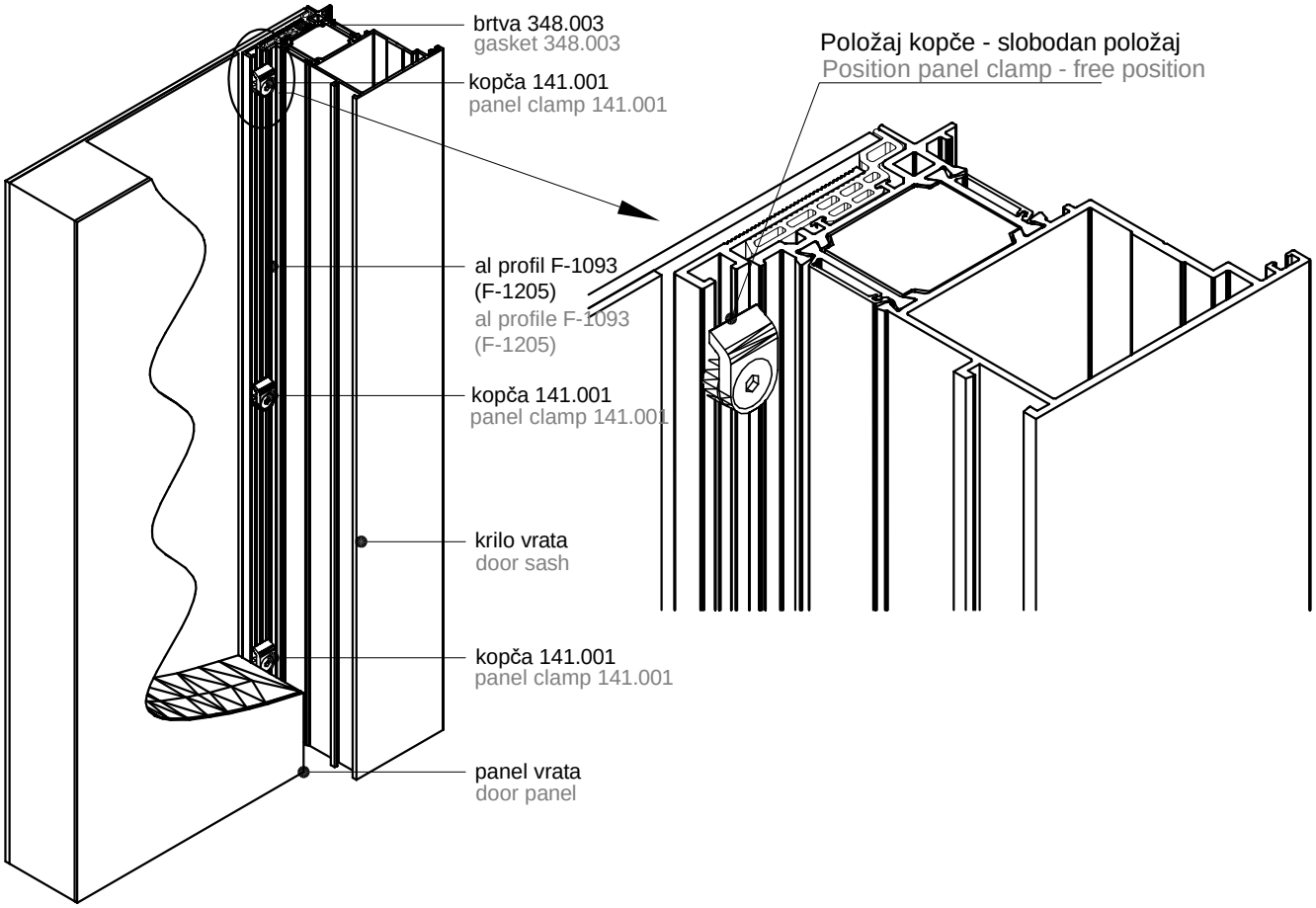

kutna spojnica 710.015
corner bracket 710.015
130
250
svakih 250
every
kopča 141.001
panel clamp 141.001
F-1093
kopča 141.001
panel clamp 141.001
kopča 141.001
panel clamp 141.001
130
250
svakih 250
every
kopča 141.001
panel clamp 141.001
F-1093
45°
F-1093
maticu 432.003
M5 DIN 934 ubaciti
u žlijeb prije kutne spojnice
nut 432.003
M5 DIN 934 put in profile
groove before corner bracket
432.003
matica M5 DIN 934
nut M5 DIN 934
sigurnosna podložna pločica
safety distance plate
stezna pločica
clamp plate
431.281
vijak M5x12
DIN 7991
431.281
screw M5x12
DIN 7991
kopča 141.001
panel clamp 141.001
kopče 141.001 pritegnuti
imbus ključem 3 mm u
položaj prema crtežu
panel clamp 141.001 fastening
with hex key 3 mm in drawing
position

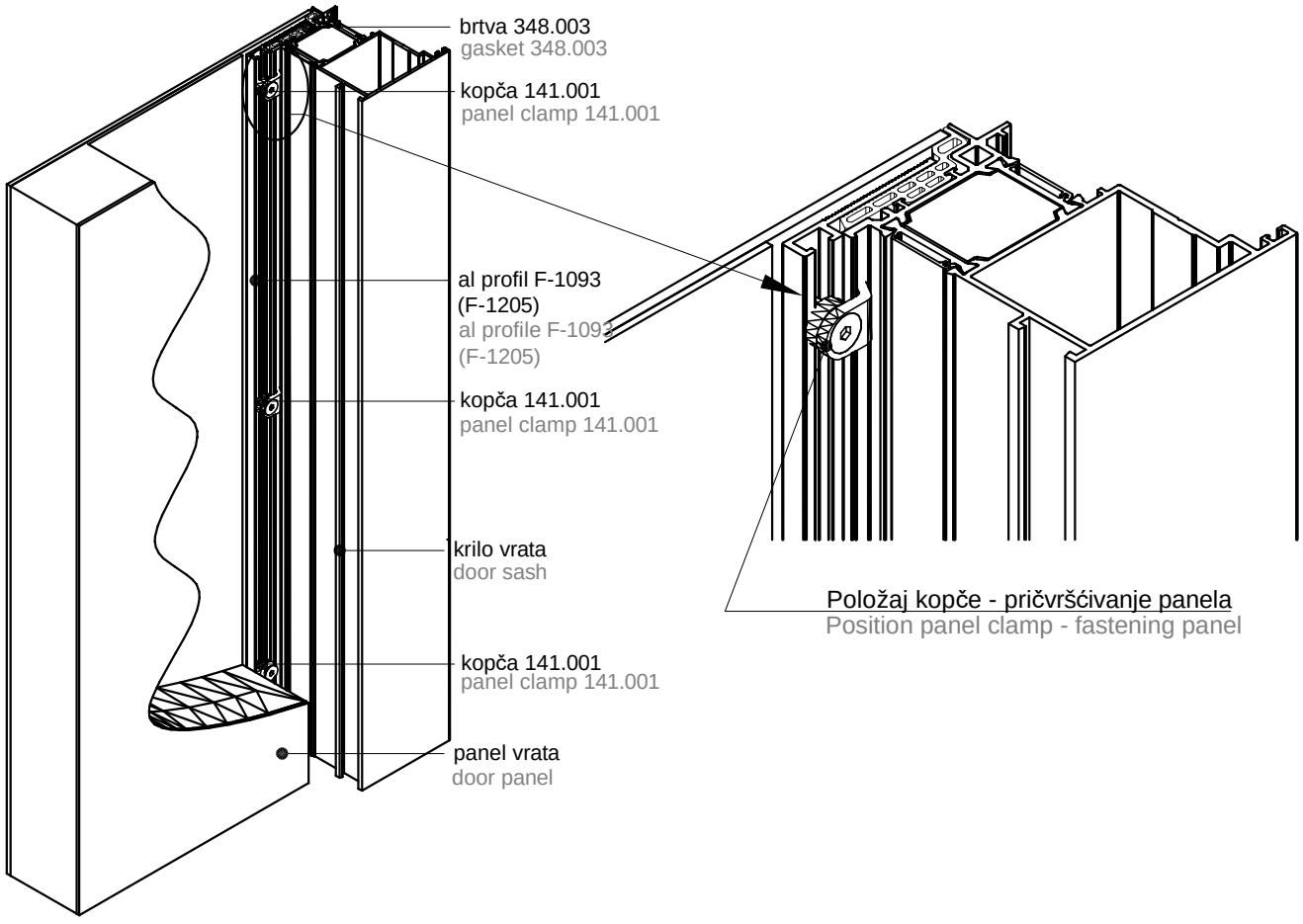

413.001
obostrano ljepljiva traka (d=1 mm) za ljepljenje stakla za unutarnji lim
413.001
double side adhesive tape (d=1 mm) for gluing glass on interior sheet
troslojno staklo-dimenzije ovisno o izgledu panela
triple glass-dimension depends of panel
413.001
obostrano ljepljiva traka (d=1 mm) za ljepljenje stakla za vanjski lim
413.001
double side adhesive tape (d=1 mm) for gluing glass on exterior sheet
2
60
3
H unutarnjeg lima=Hkr-173 (za krilo FT-0591F)
H unutarnjeg lima=Hkr-193 (za krilo FT-0592F)
H interior sheet=Hsh-173 (sash FT-0591 F)
H interior sheet=Hsh-193 (sash FT-0592 F)
Lunutar. lima=Lkr-173 (za FT-0591F)
Linter. sheet=Lsh-173 (for FT-0591F)
Lunutar. lima=Lkr-193 (za FT-0592)
Linter. sheet=Lsh-193 (for FT-0592F)
H panela=Hkr-173 (za krilo FT-0591F)
H panel=Hsh-173 (for sash FT-0591F)
H panela=Hkr-193 (za krilo FT-0592F)
H panel=Hsh-193 (for sash FT-0592F)
Lpanela=Lkr-173 (za FT-0591F)
Lpanel=Lsh-173 (for FT-0591F)
Lpanela=Lkr-193 (za FT-0592F)
Lpanel=Lsh-193 (for FT-0592F)
H vanjskog lima=Hkr-56
H exterior sheet=Hsh-56
912 (brava GU) (lock GU)
Hru-38
Lvanjskog lima=Lkr-56
Lexterior sheet=Lsh-56
Ø17.5
15-za bravu 35-icu
25-za bravu 45-icu
Ø17.5
92
33.5
10.5
obrada na vanjskom limu za bravu 35-icu
processing on exterior sheet for lock (backset 35)



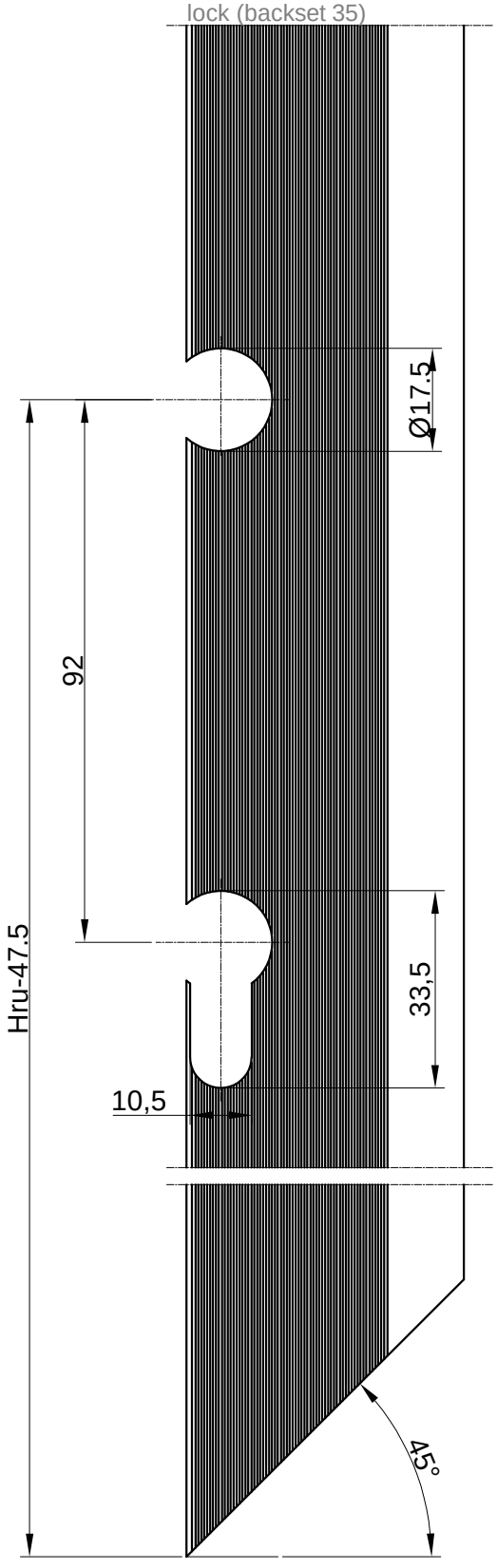


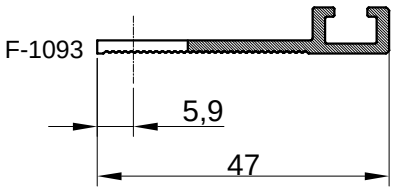
Hru-visina ručke
Hru-door handle height


brtva 348.003
gasket 348.003
kopča 141.001
panel clamp 141.001
al profil F-1093
(F-1205)
al profile F-1093
(F-1205)
kopča 141.001
panel clamp 141.001
krilo vrata
door sash
kopča 141.001
panel clamp 141.001
panel vrata
door panel
Položaj kopče - slobodan položaj
Position panel clamp - free position

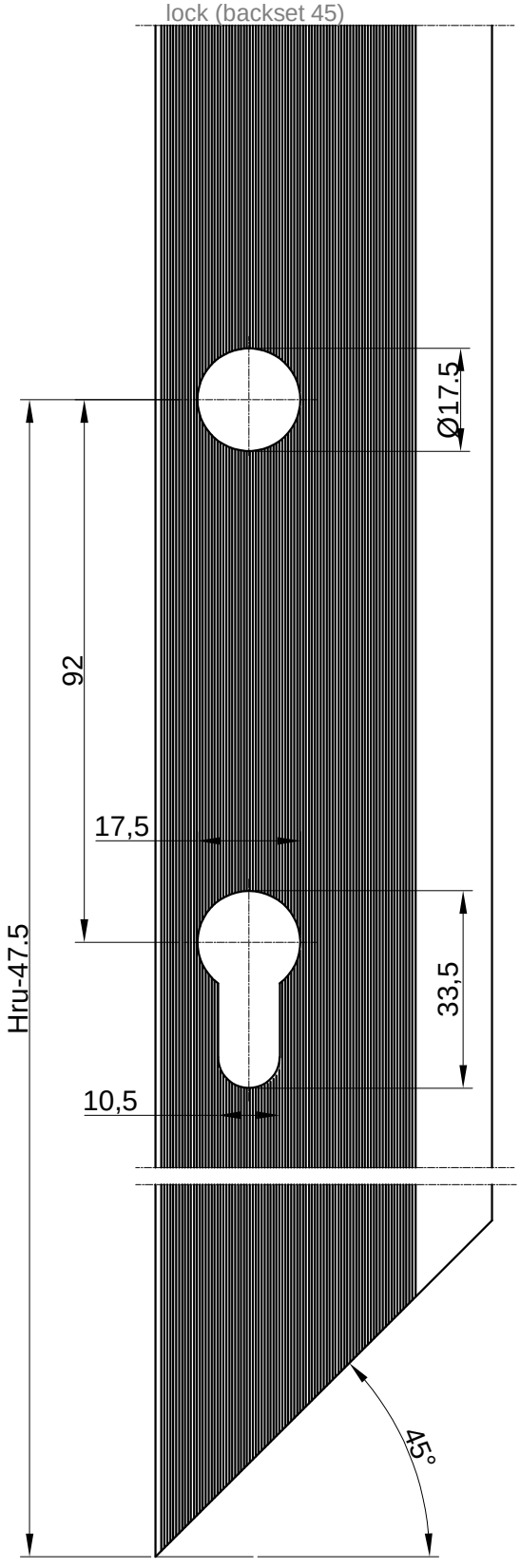

brtva 348.003
gasket 348.003
kopča 141.001
panel clamp 141.001
al profil F-1093
(F-1205)
al profile F-1093
(F-1205)
kopča 141.001
panel clamp 141.001
krilo vrata
door sash
kopča 141.001
panel clamp 141.001
panel vrata
door panel
Položaj kopče - pričvršćivanje panela
Position panel clamp - fastening panel

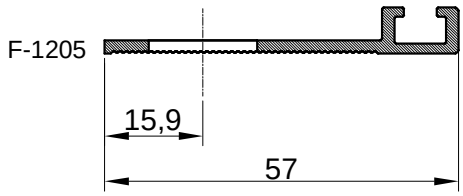
obrada profila F-1093 za bravu 35-icu
processing profile F-1093 for lock (backset 35)



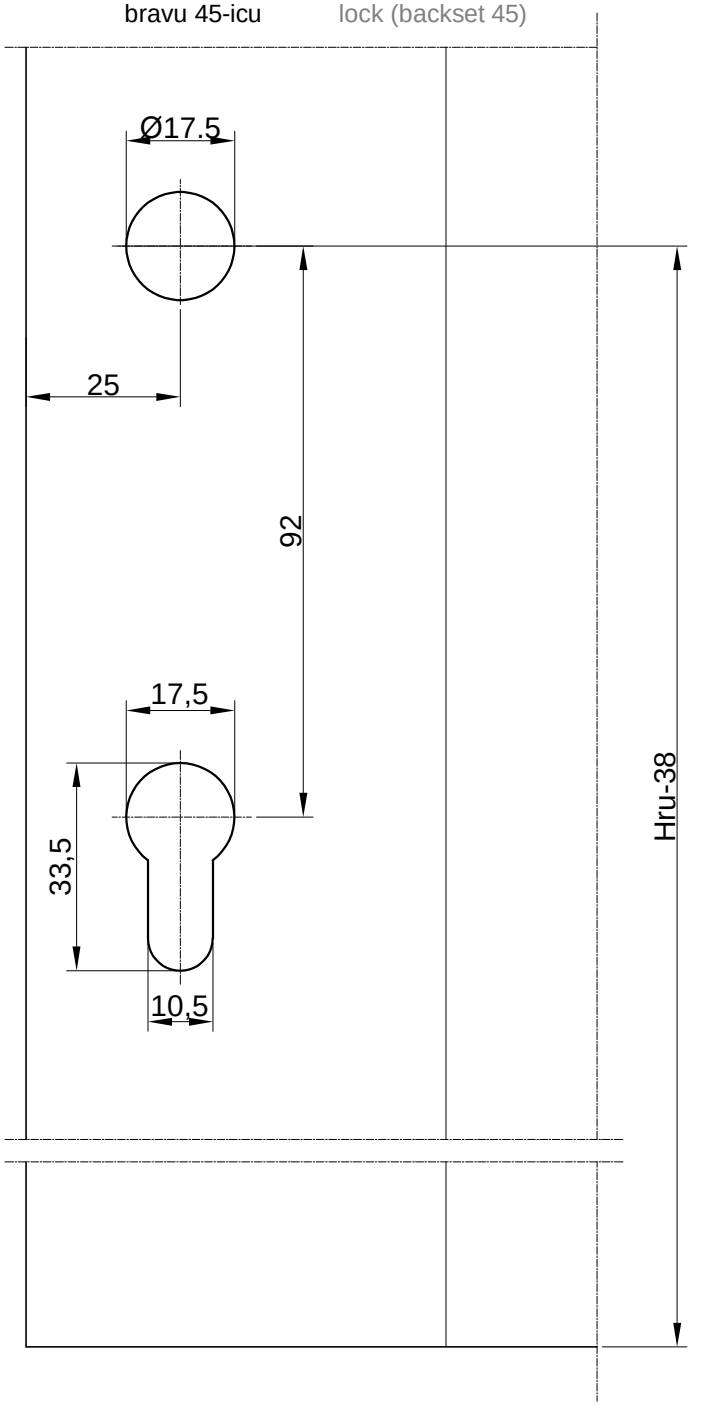


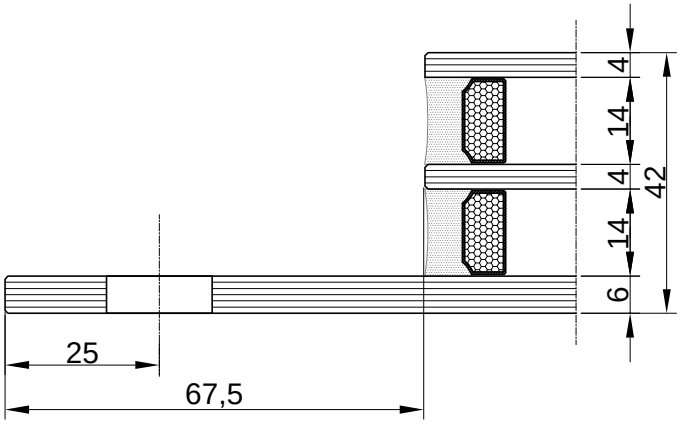
obrada profila F-1205 za bravu 45-icu
processing profile F-1205 for lock (backset 45)





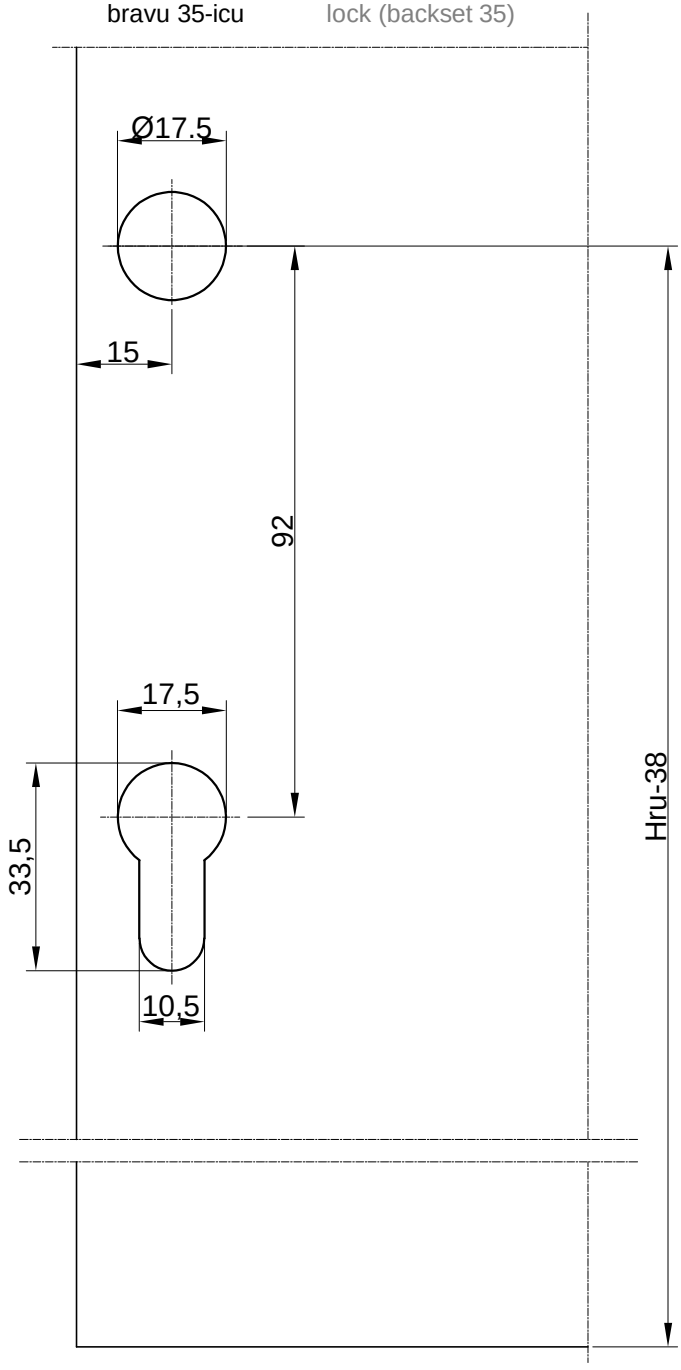
obrada stakla za bravu 45-icu
glas processing for lock (backset 45)

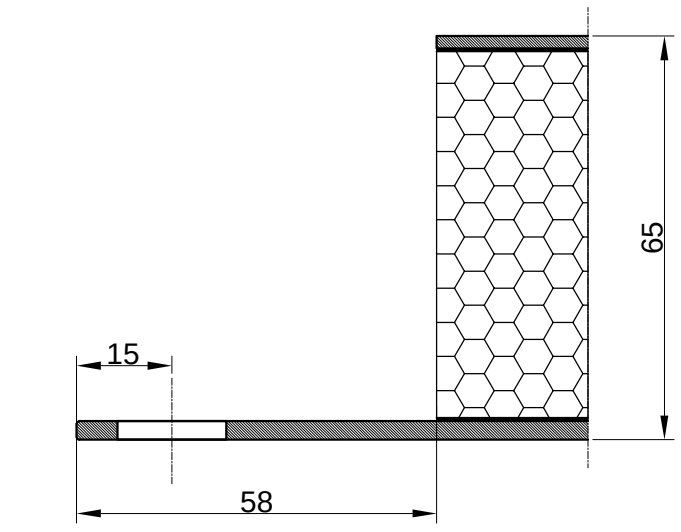




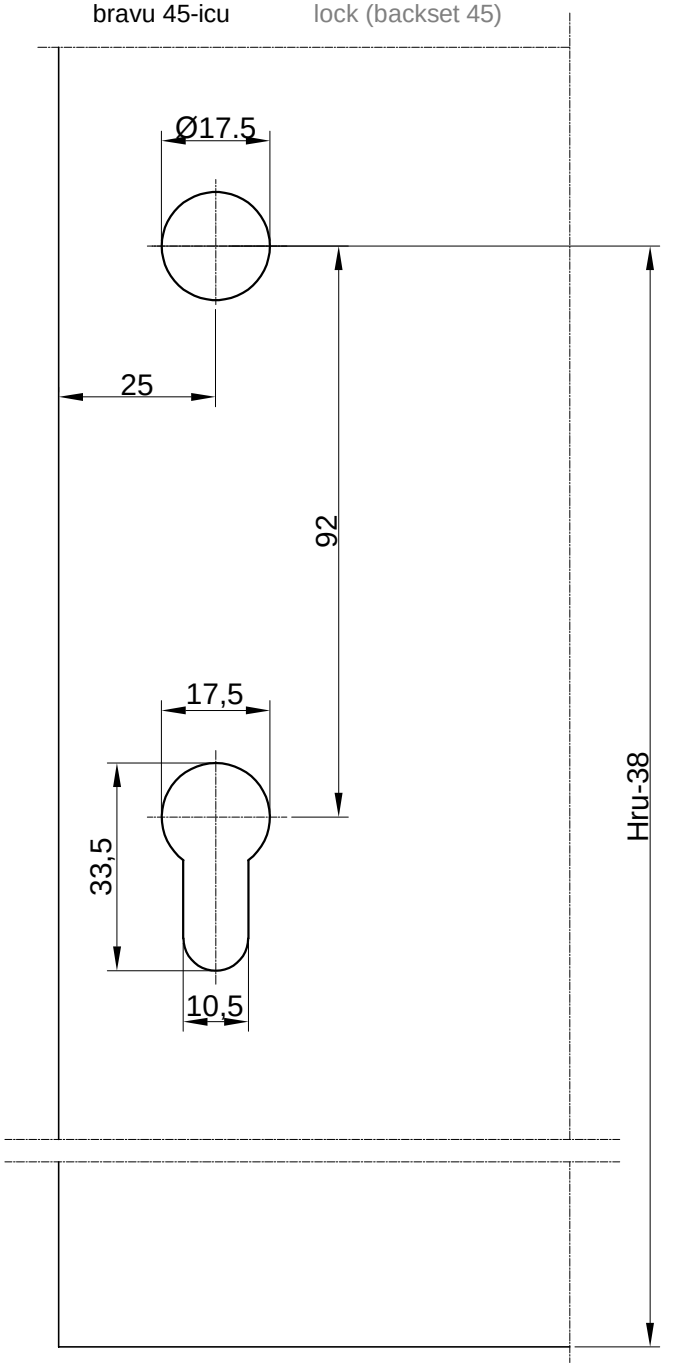
prepust za krilo FT-0592F
for sash FT-0592F

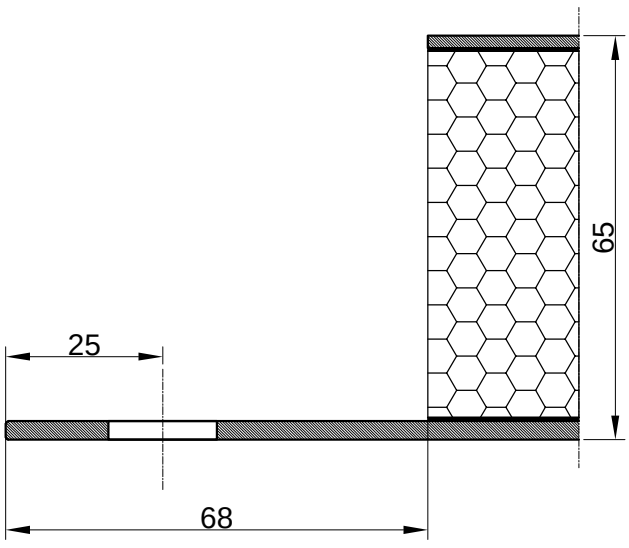
obrada panela za bravu 35-icu / panel processing for lock (backset 35)

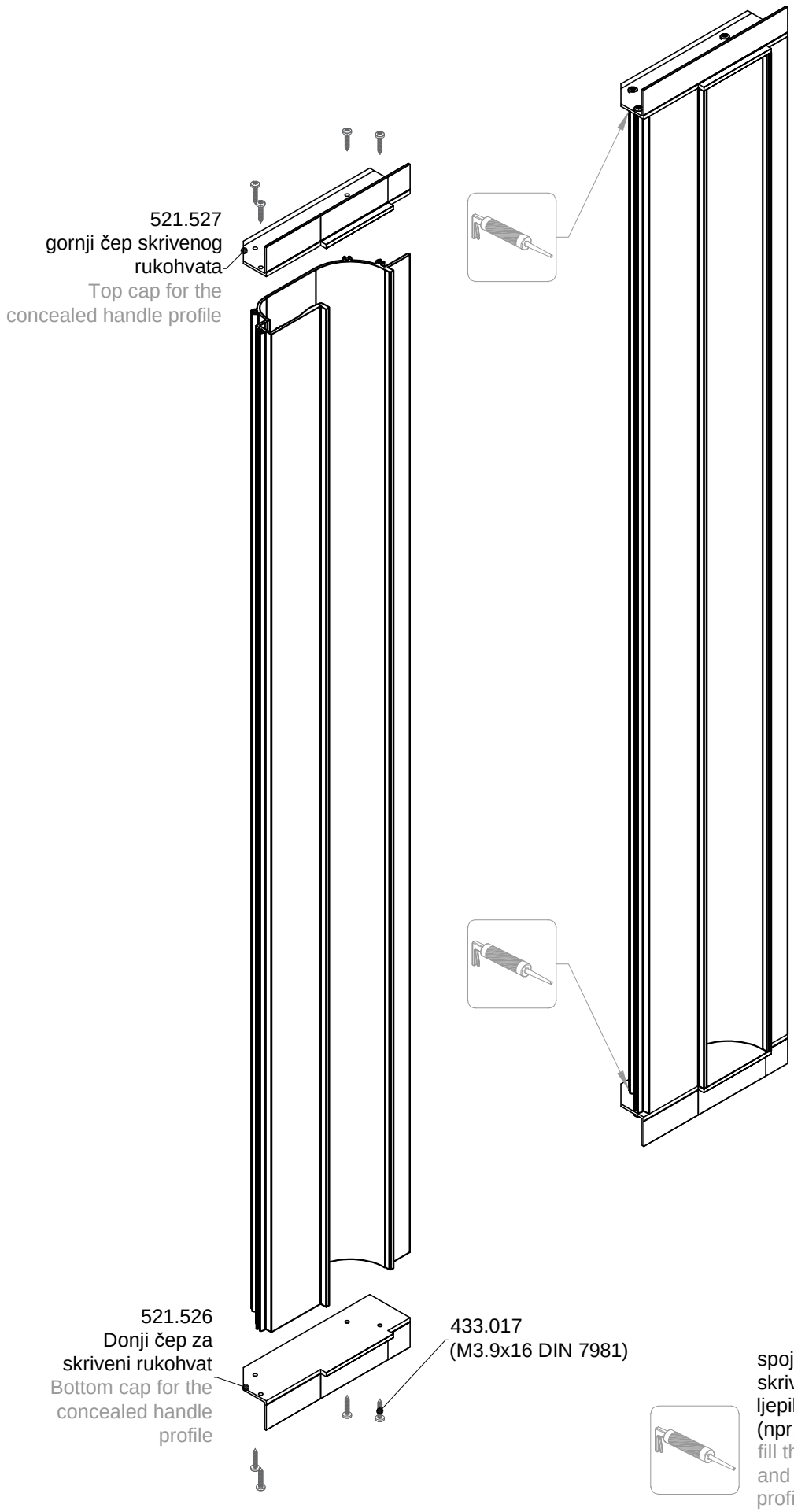




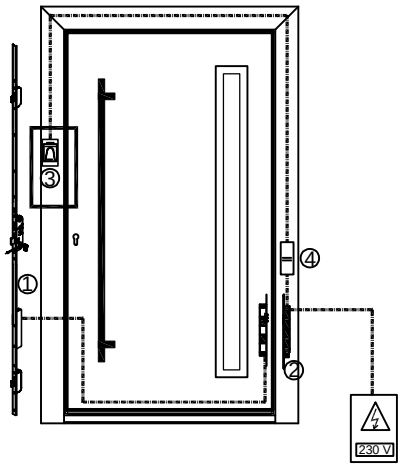
obrada panela za bravu 45-icu / panel processing for lock (backset 45)

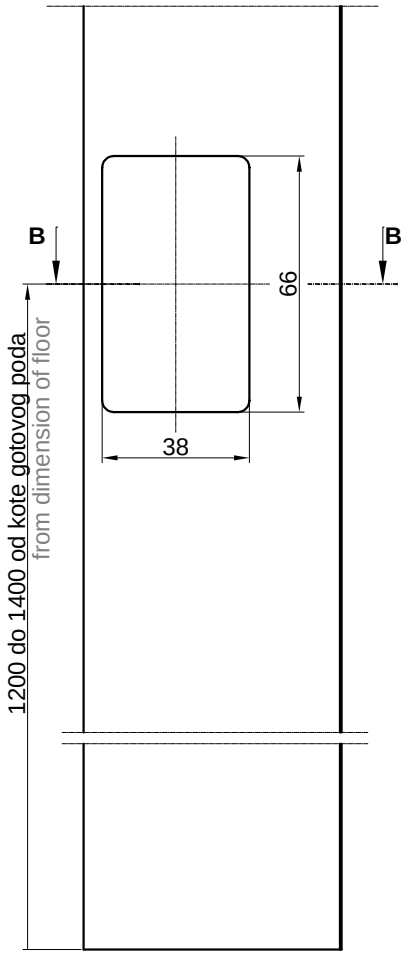


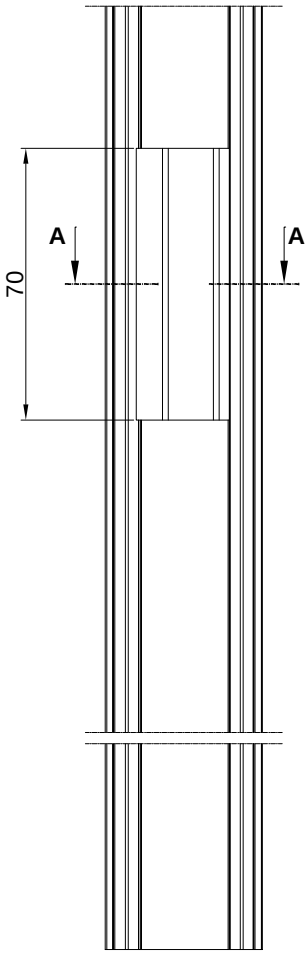


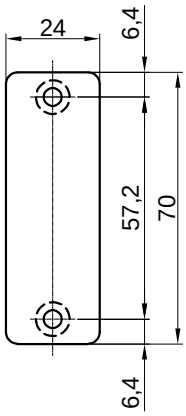


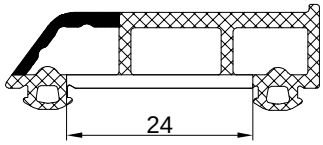
spoj između čepa i profila skrivenog rukohvata popuniti ljepilom za metal (npr. Teroson MS 939)
fill the joint between the cap and the concealed handle profile with metal glue (eg. Teroson MS 939)



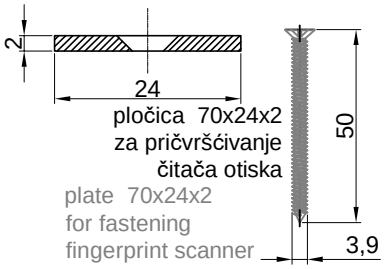








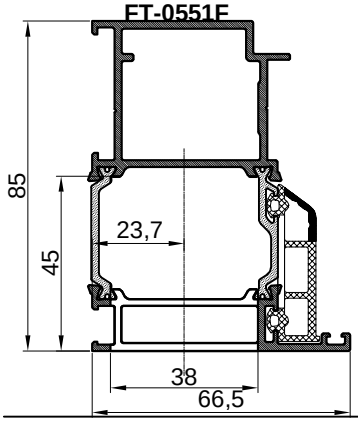
A-A
M 2:1
obrada brtve 338.004
za prihvat pločice
processing on gasket
338.004
for plate 70x24x2



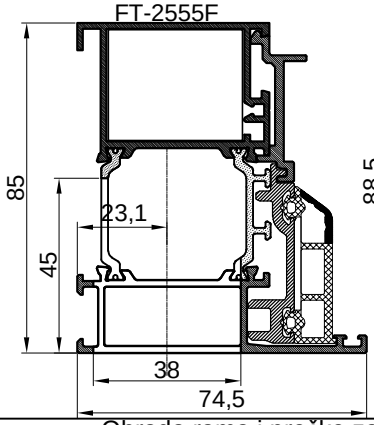
pločica 70x24x2
za pričvršćivanje
čitača otiska
plate 70x24x2
for fastening
fingerprint scanner

3.9x50
DIN 7982

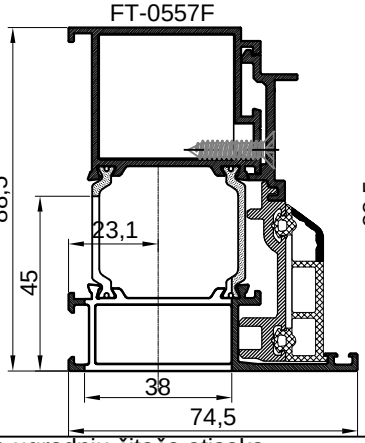
B-B
FT-0551F



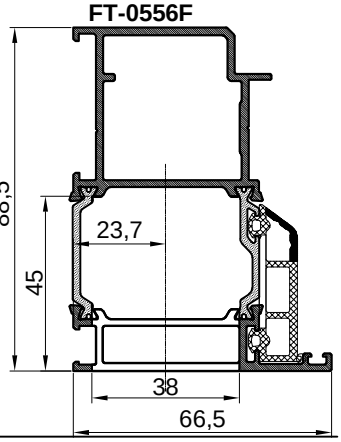
B-B
FT-2555F

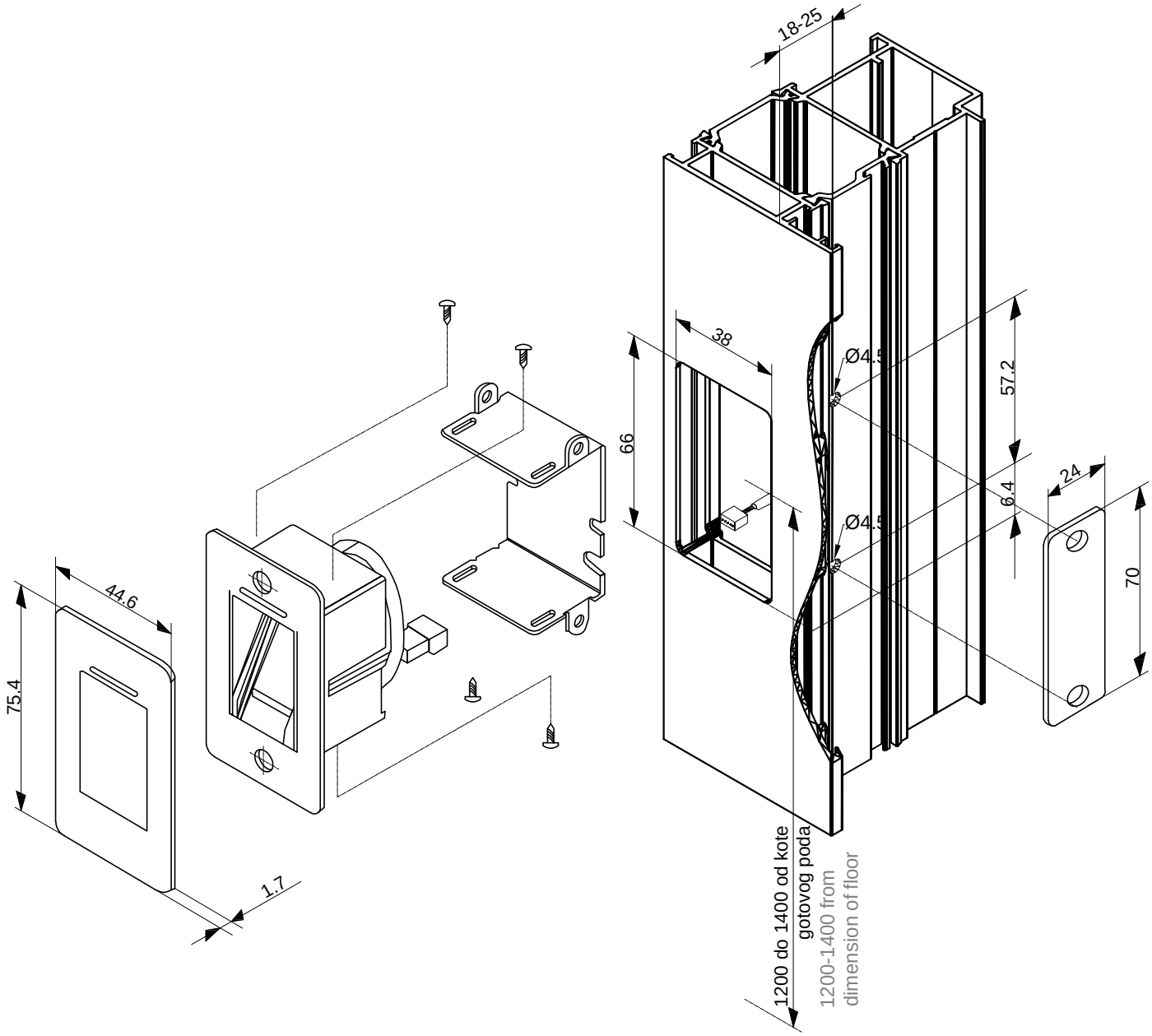


B-B
FT-0557F



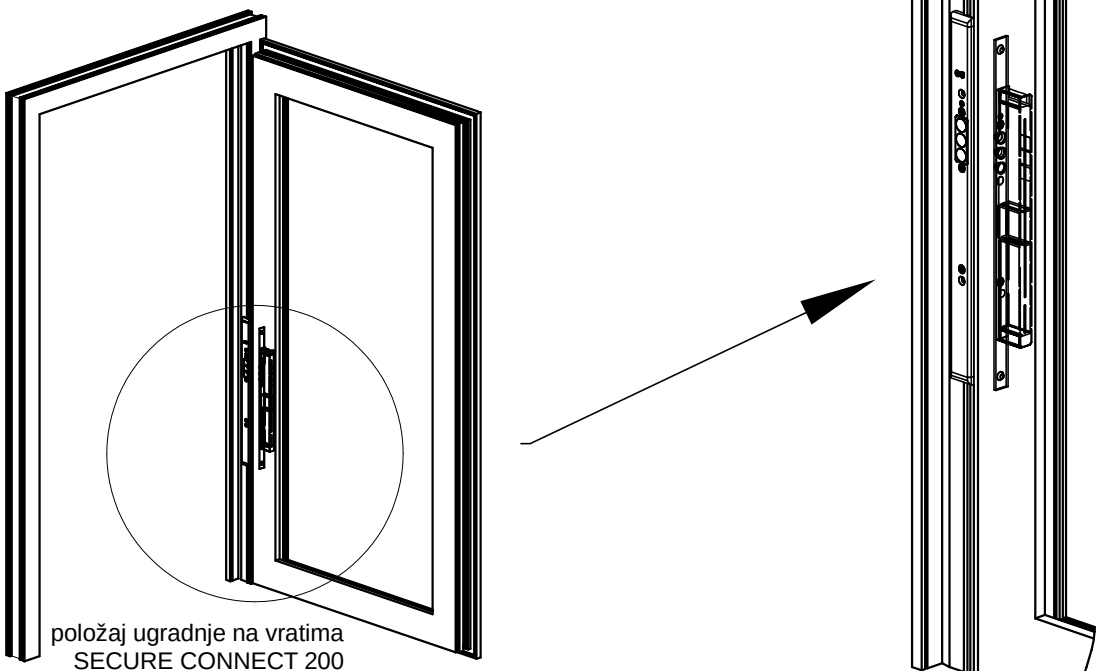
B-B
FT-0556F



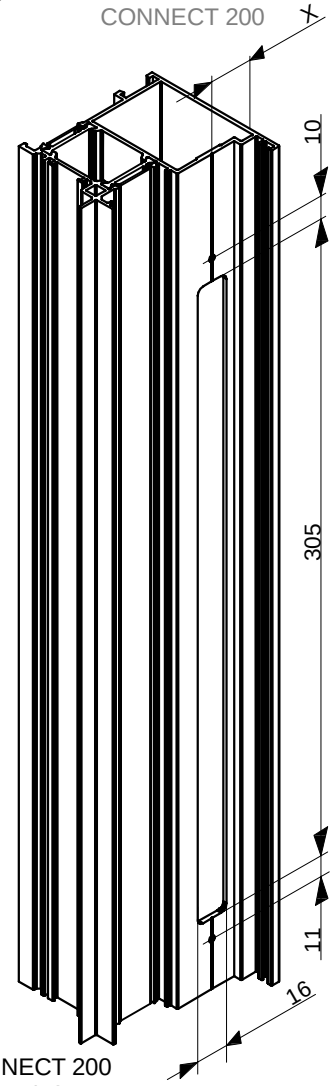


Za montažu modula je potrebno napraviti udubljenje veličine 38x66 mm, dubine 45 mm. Preporučena visina montaže modula je 1200 do 1400 mm od kote gotovog poda. Priključni vod je potrebno položiti unutar profila ka udubljenju za montažu modula. Modul se priloženim vijcima dimenzija 3.9x50 bočno iz utora okova pričvršćuje u profil.
Montažni okvir se, ako je potrebno zaokrenuti za 180°, mora pričvrstit na modul. Udubljenje za pričvršćivanje većeg prečnika je potrebno uvijek usmjeriti prema utoru okova.
Položaj bočnog pričvršćivanja od prednje strane profila može varirati u opsegu od 18.7 do 23.5 mm preko duguljastih rupa montažnog kutnika.
Na kraju se nalijepi dekorativni završni profil. Ljepljive trake za to se nalaze na unutrašnjoj strani završnog profila.

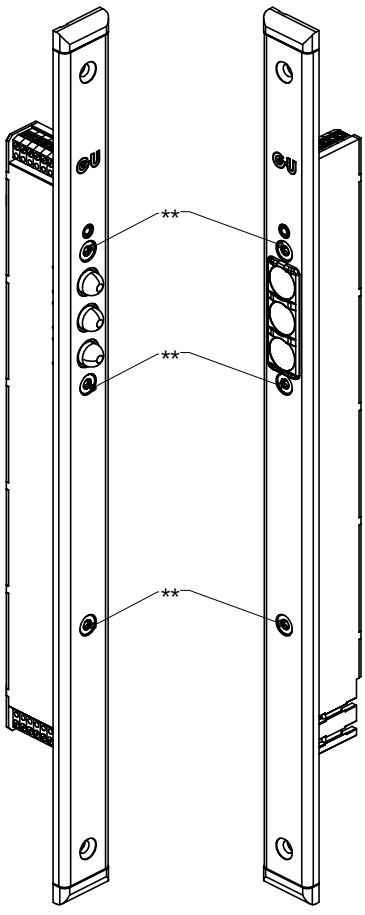
For mounting the module, it is necessary to make a recess 38x66 mm, depth 45 mm.
The recommended mounting height of the module is 1200 to 1400 mm from the finished floor.
The connection cable must be laid inside the profile to the module recess. The module is attached to the profile with the supplied screws 3.9x50 in length from the slot.
The mounting frame must be attached to the module if it is necessary to rotate by 180 °. Always align the recess for fastening the larger diameter to the slot groove.
The lateral fixation position from the front of the profile may vary from 18.7 to 23.5 mm across the longitudinal hole of the mounting bracket.
Finally the decorative end profile is pasted. Adhesive tapes for this are on the inside of the end profile



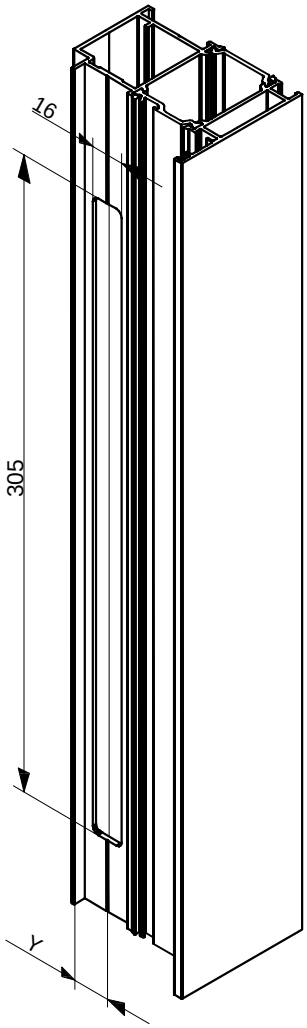
položaj ugradnje na vratima SECURE CONNECT 200
position in door SECURE CONNECT 200



obrada krila za SECURE CONNECT 200
processing on sash for SECURE CONNECT 200

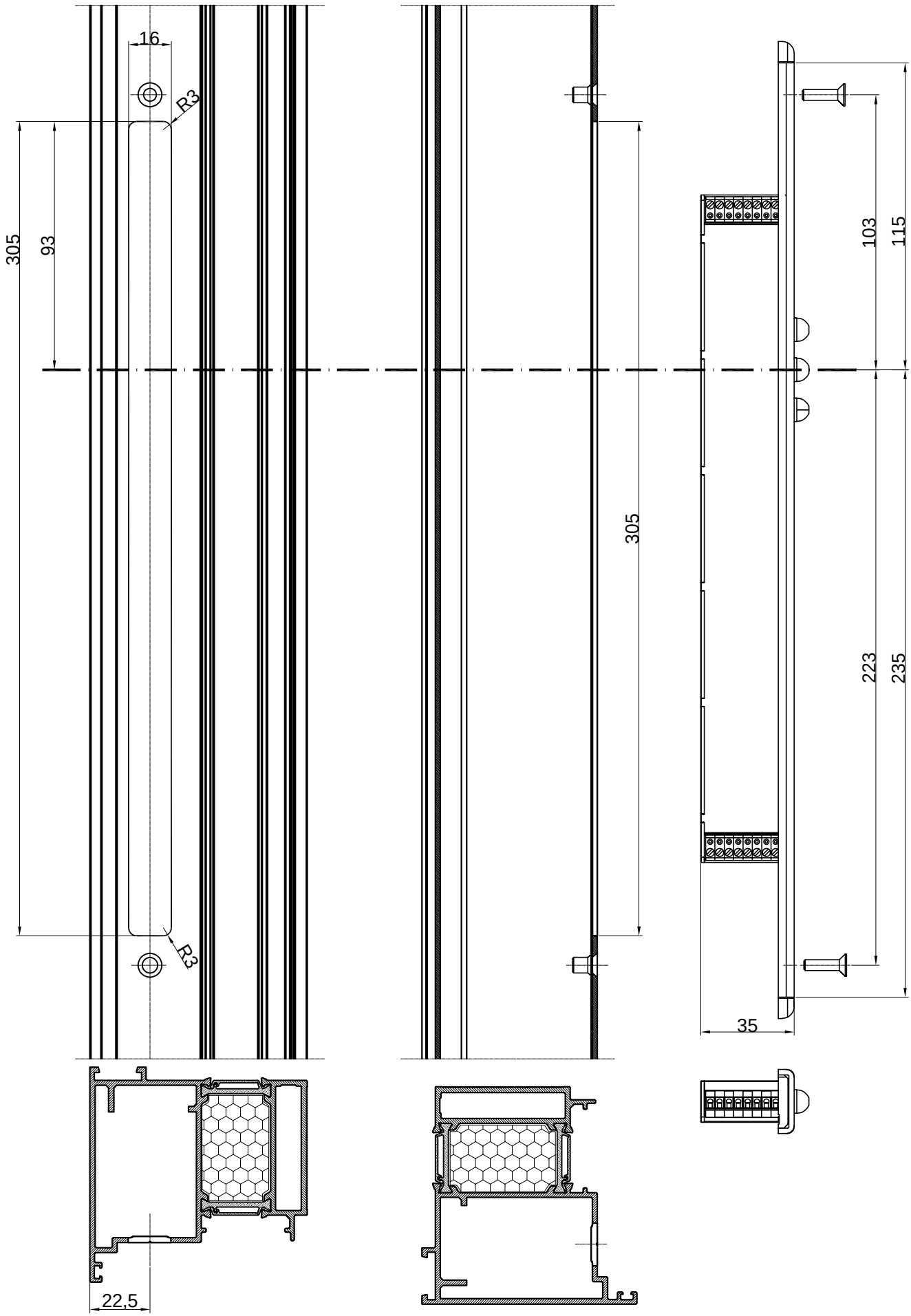


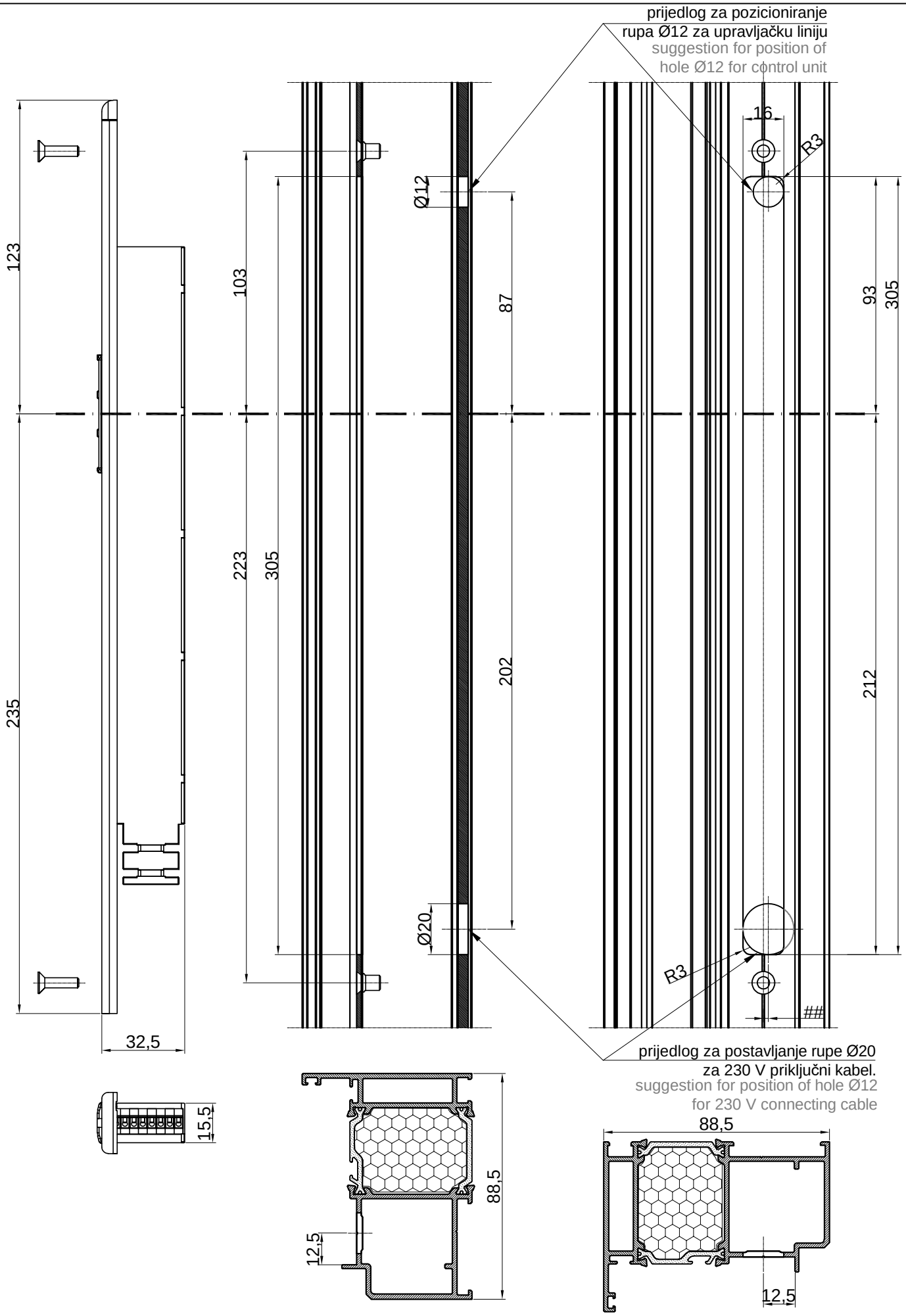
** max. obrtna sila =1Nm
** max. torque =1Nm

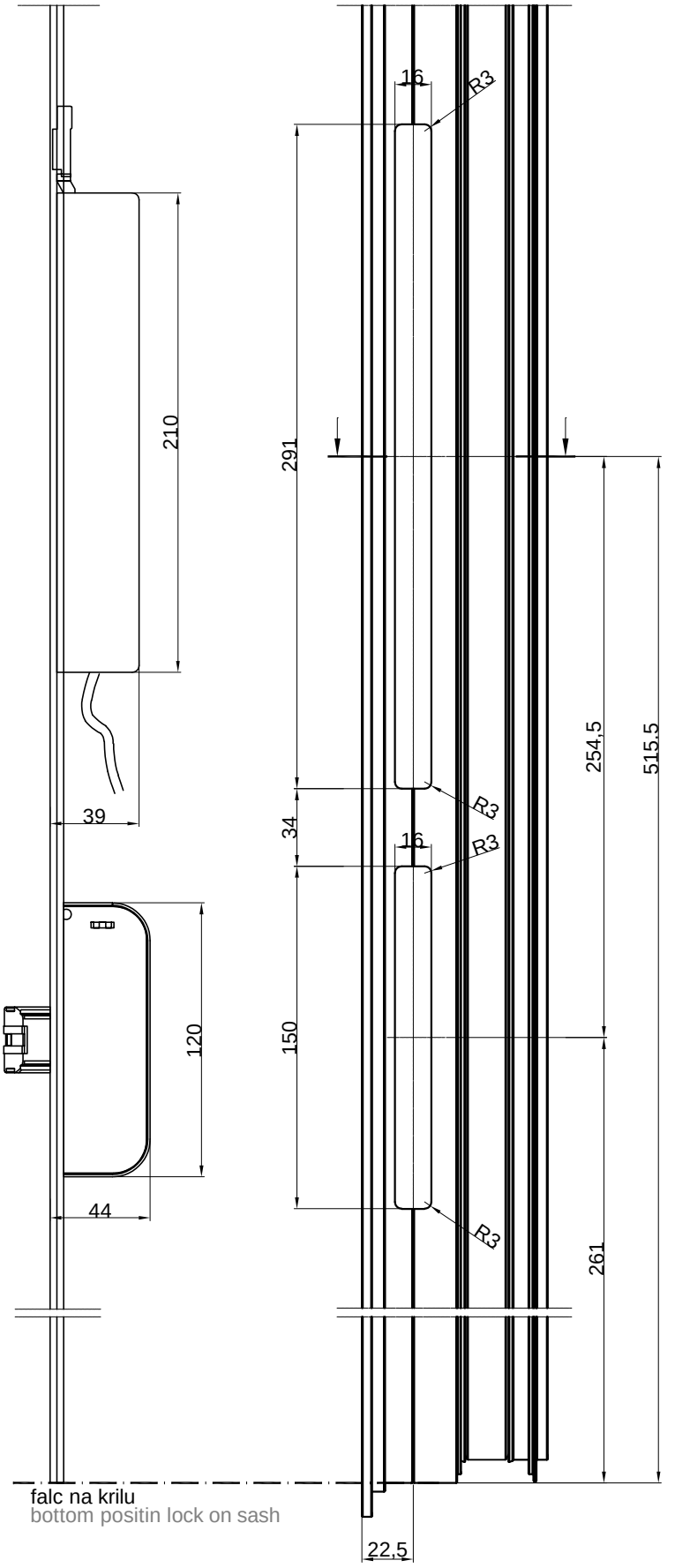


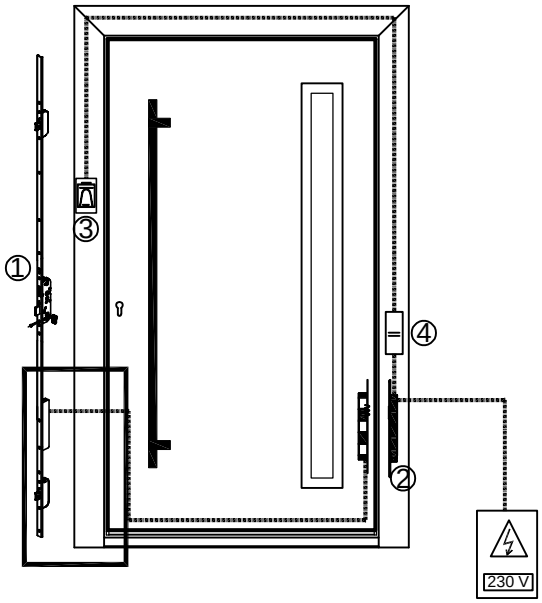
obrada na ramu, prečki za SECURE CONNECT 200
processing on frame, transom for SECURE CONNECT 200

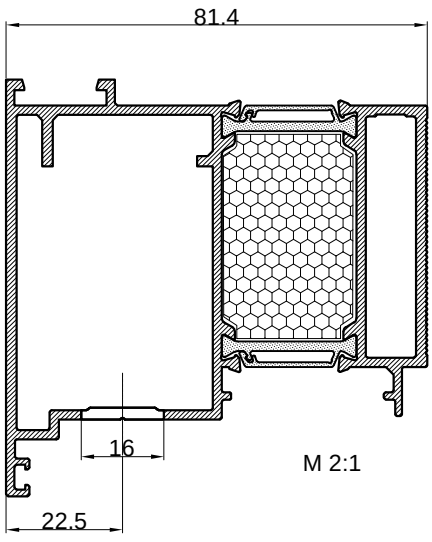
X=22.5 mm za krila FT-0591F, FT-0592F i FT-0593F
X=22.5 mm for sash FT-0591F, FT-0592F i FT-0593F
Y=12.5 mm za ramove FT-0551F; FT-2555+F-1222; FT-0557F+F-1222; FT-0556F
Y=12.5 mm for frames FT-0551F; FT-2555+F-1222; FT-0557F+F-1222; FT-0556F

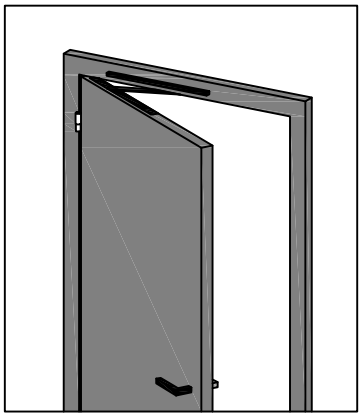

16
R3
R3
305
93
305
103
115
223
235
35
22,5

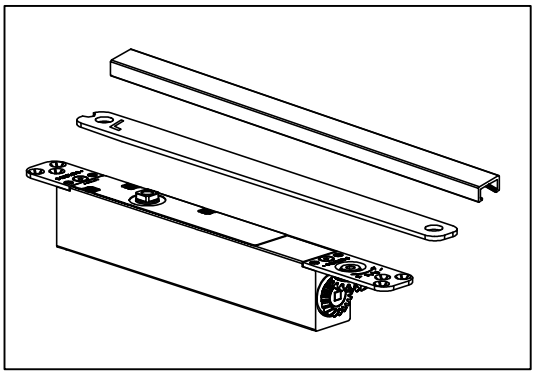

prijedlog za pozicioniranje
rupa Ø12 za upravljačku liniju
suggestion for position of
hole Ø12 for control unit
16
R3
Ø12
123
103
87
93
305
223
305
202
212
235
Ø20
R3
##
32,5
prijedlog za postavljanje rupe Ø20
za 230 V priključni kabel.
suggestion for position of hole Ø12
for 230 V connecting cable
15,5
88,5
12,5
88,5
12,5


16
R3
291
210
39
34
254,5
515.5
150
120
44
261
22,5
falc na krilu
bottom positin lock on sash

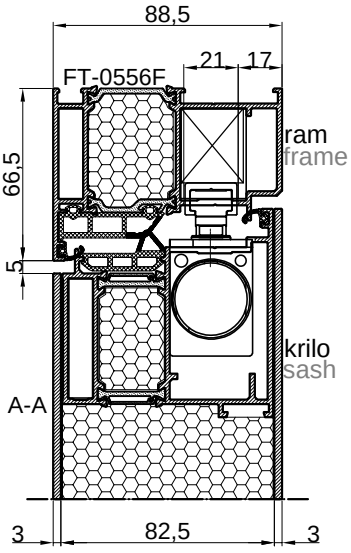

①
②
③
④
230 V

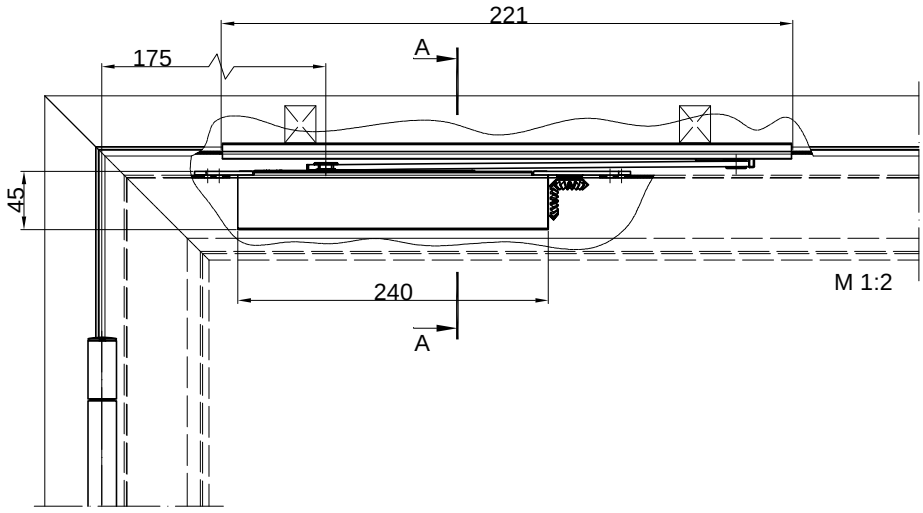

81.4
16
22.5
M 2:1



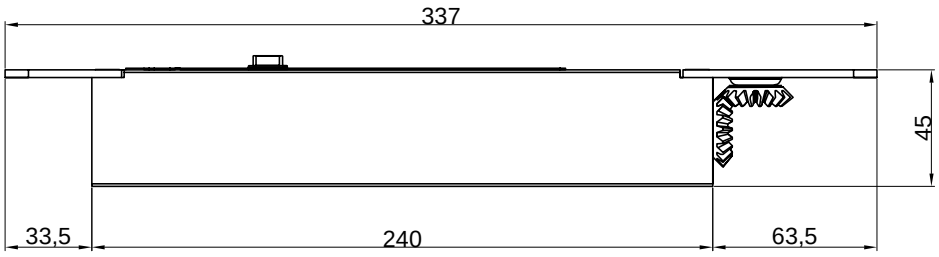


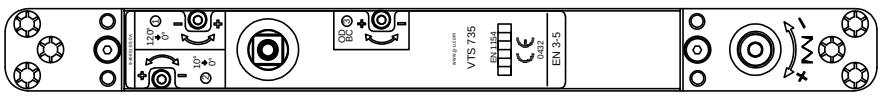
Skriveni zatvarač
G-U VTS 735+GS VTS 73x20x12
Concealed door closer
G-U VTS 735+GS VTS 73x20x12





Skriveni zatvarač
GU VTS 735+GS VTS 73x20x12
Concealed door closer
GU VTS 735+GS VTS 73x20x12

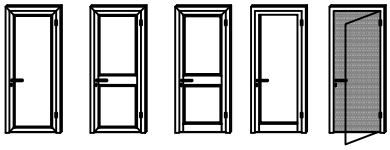




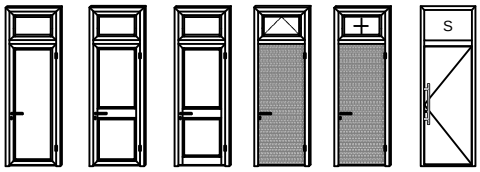
Obrada krila za ugradnju skrivenog zatvarača
Processing on sash for montage concealed door closer



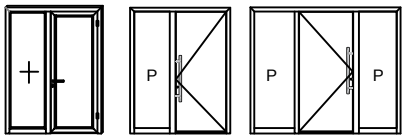
Rezne liste
Cutting lists



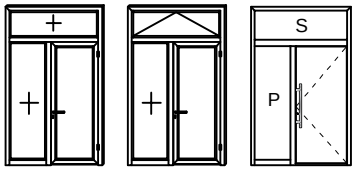
Jednokrilna vrata
Single-leaf door



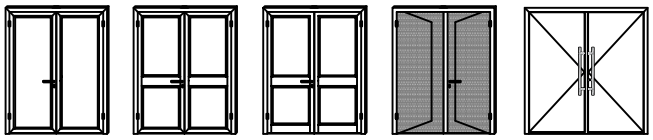
Jednokrilna vrata s nadsvjetlom
Single-leaf door with top light



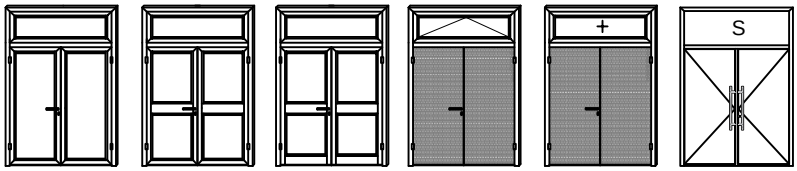
Jednokrilna vrata s bočnim fiksnim poljem
Single-leaf door with side fixed field



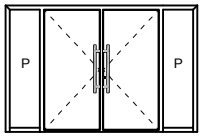
Jednokrilna vrata s bočnim fiksnim poljem i nadsvjetlom
Single-leaf door with side fixed field and top light



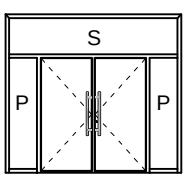
Dvokrilna vrata
Double-leaf door



Dvokrilna vrata s nadsvjetlom
Double-leaf door with top light

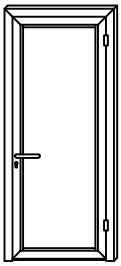


Dvokrilna vrata s bočnim fiksnim poljem
Double-leaf door with side fixed field

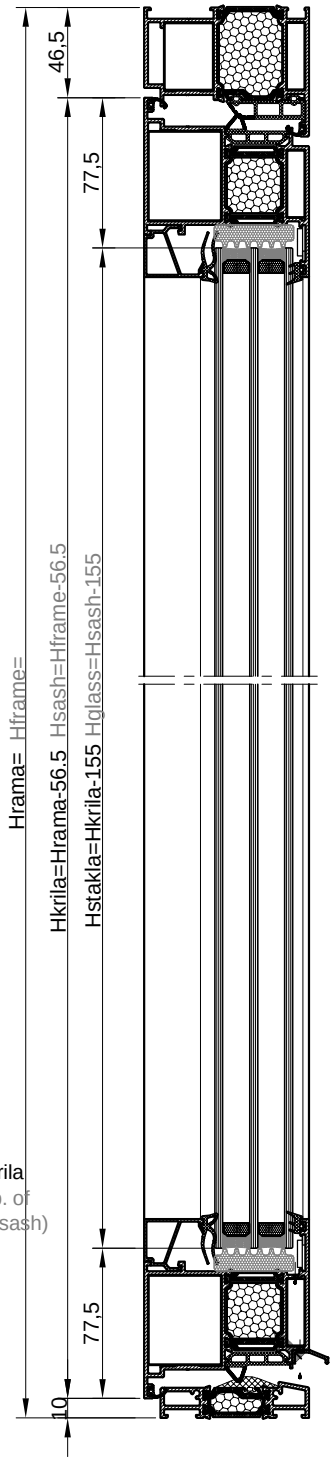


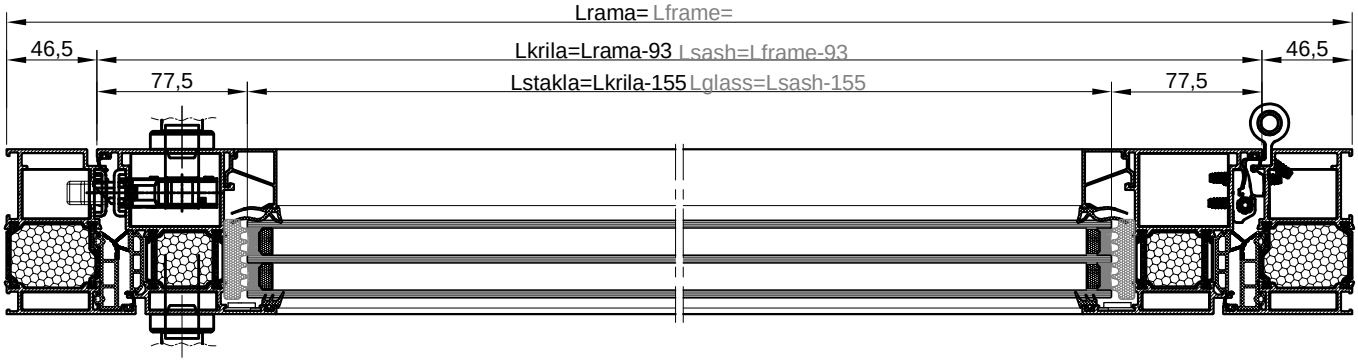
Dvokrilna vrata s bočnim fiksnim poljem i nadsvjetlom
Double-leaf door with side fixed field and top light

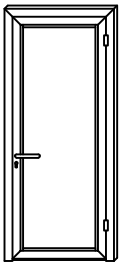
Jednokrilna vrata
Single-leaf door



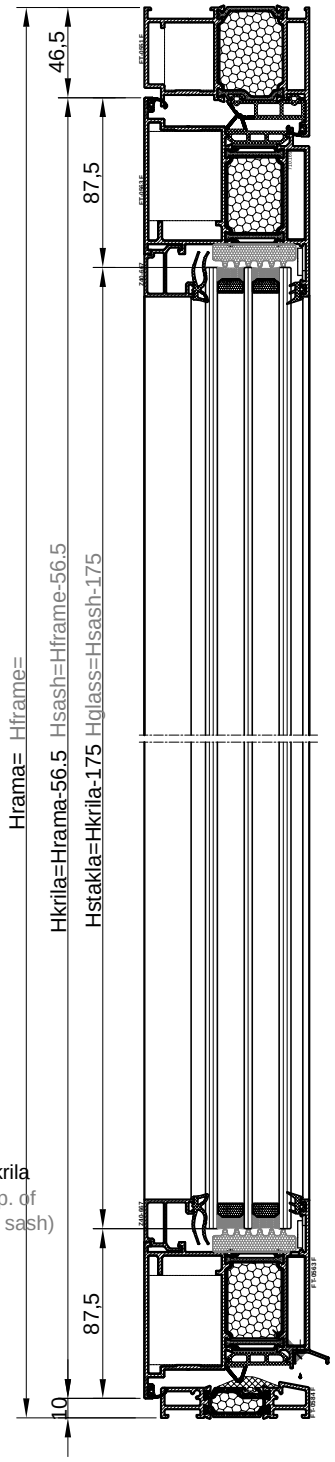
naziv name		mjera dimension	kom. pcs.	pilanje sawing angle
Ram FT-0551F	Frame FT-0551F	L	1	45-45
Ram FT-0551F	Frame FT-0551F	H	2	45-90
Krilo FT-0561F	Sash FT-0561F	L-93	2	45-45
Krilo FT-0561F	Sash FT-0561F	H-56.5	2	45-45
Prag FT-0584F	Threshold FT-0584F	L-164	1	90-90
Okapnica F-0970	Drip cap profile F-0970	Lkr - 58	1	90-90
Staklo lajsna Z40-668	Glazing bead Z40-668	Lkr-141	2	90-90
Staklo lajsna Z40-668	Glazing bead Z40-668	Hkr-185	2	90-90
Kutna spojnica 710.143	Corner bracket 710.143		2	
Kutna spojnica 710.141	Corner bracket 710.141		6	
Kutna spojnica 710.136	Corner bracket 710.136		4	
Kutna spojnica 731.010	Corner bracket 731.010		4	
Kutna spojnica 730.001	Corner bracket 730.001		10	
Centralna brtva rama 338.004	Central gasket-frame 338.004	1L+2H		
Centralna brtva krila 338.006	Central gasket-sash 338.006	2Lkr+2Hkr		
Brtva na spoju rama i krila 317.002	Rebate gasket 317.002	3Lkr+4Hkr		
Brtva prema staklu vanjska 328.003	Glazing gasket -external- 328.003	2Lkr+2Hkr		
Brtva prema staklu unutarnja 311.004	Glazing gasket -internal- 311.004	2Lkr+2Hkr		
Brtva praga 331.012	Threshold gasket 331.012	L-164	1	90-90
Izolacijski umetak ispod stak.340.013	Underglass insulator 340.013	2(Lkr.-131)+2(Hkr.-155)		
Čep okapnice F-0970 375.001	End cap for F-0970 375.001		1 par	
Umetak na pragu 363.103	End cap for threshold 363.103		1 par	
Brava G-U Secury MR2 (35) tri ključanja 122.016	Multipoint lock - G-U Secury MR2 (35) - 122.016		1	
Prihvatna pločica 24x6x2 122.065	Striking plate 24x6x2 122.065		2	
Prihvatni lim 24x6 (lijevi) 122.064	Striking plate 24x6 (left) 122.064		1	
Trodijelna cilindrična šarka 112.011.01 - bijela	Barrel door hinge-3 part 112.011.01 - white		2 ili (3) po krilu ovisno o visini i tež.krila 2 or (3) per sash(dep. of height and weight of sash)	
Ručka za vrata 102.028	Door handle 102.028		2	
Četvrtka 102.025	Square spindle 102.025		1	
Cilindar (35-75) 122.095	Cylinder (35-75) 122.095		1	
Štitnik cilindra 122.098	Cylinder rosette 122.098		2	
Protuprovalni umetak 141.002	Security pin 141.002		2	
Vijak 433.094	Screw 433.094		3	
Staklo 40 mm	Glass 40 mm	(Lkr.-155)x(Hkr.-155)	1	



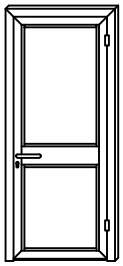




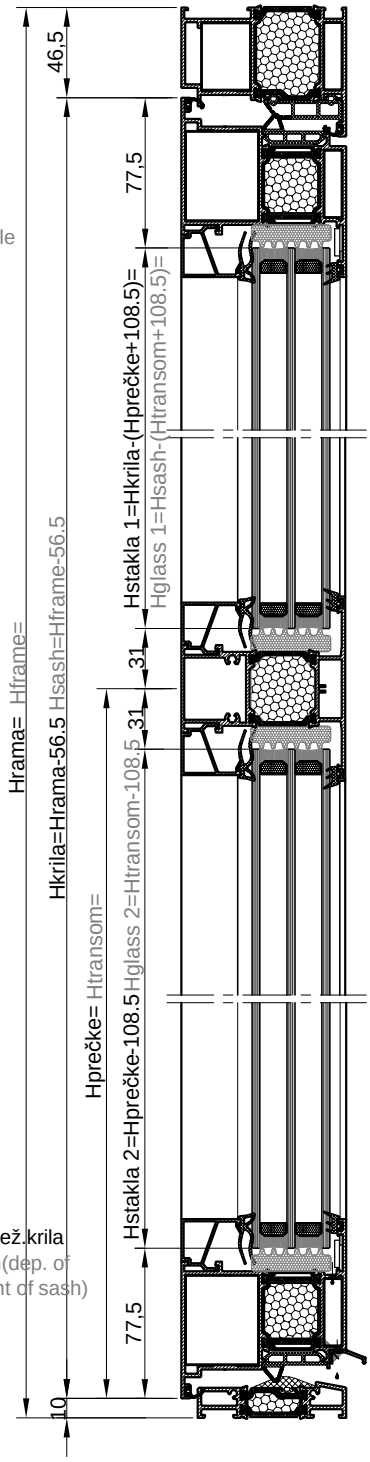
naziv name		mjera dimension	kom. pcs.	pilanje sawing angle
Ram FT-0551F	Frame FT-0551F	L	1	45-45
Ram FT-0551F	Frame FT-0551F	H	2	45-90
Krilo FT-0563F	Sash FT-0563F	L-93	2	45-45
Krilo FT-0563F	Sash FT-0563F	H-56.5	2	45-45
Prag FT-0584F	Threshold FT-0584F	L-164	1	90-90
Okapnica F-0970	Drip cap profile F-0970	Lkr - 58	1	90-90
Staklo lajsna Z40-667	Glazing bead Z40-667	Lkr-161	2	90-90
Staklo lajsna Z40-667	Glazing bead Z40-667	Hkr-205	2	90-90
Kutna spojnica 710.143	Corner bracket 710.143		2	
Kutna spojnica 710.141	Corner bracket 710.141		2	
Kutna spojnica 710.136	Corner bracket 710.136		4	
Kutna spojnica 710.169	Corner bracket 710.169		4	
Kutna spojnica 731.010	Corner bracket 731.010		4	
Kutna spojnica 730.001	Corner bracket 730.001		6	
Centralna brtva rama 338.004	Central gasket-frame 338.004	1L+2H		
Centralna brtva krila 338.006	Central gasket-sash 338.006	2Lkr+2Hkr		
Brtva na spoju rama i krila 317.002	Rebate gasket 317.002	3Lkr+4Hkr		
Brtva prema staklu vanjska 328.003	Glazing gasket -external- 328.003	2Lkr+2Hkr		
Brtva prema staklu unutarnja 311.004	Glazing gasket -internal- 311.004	2Lkr+2Hkr		
Brtva praga 331.012	Threshold gasket 331.012	L-164	1	90-90
Izolacijski umetak 340.013	Underglass insulator 340.013	2(Lkr.-151)+2(Hkr.-175)		
Čep okapnice F-0970 375.001	End cap for F-0970 375.001		1 par	
Umetak na pragu 363.103	End cap for threshold 363.103		1 par	
Brava G-U Secury MR2 (45) tri ključanja 122.015	Multipoint lock - G-U Secury MR2 (45) -122.015		1	
Prihvatna pločica 24x6x2 122.065	Striking plate 24x6x2 122.065		2	
Prihvatni lim 24x6 (lijevi) 122.064	Striking plate 24x6 (left) 122.064		1	
Trodijelna cilindrična šarka 112.011.01 - bijela	Barrel door hinge-3 part 112.011.01 - white		2 ili (3) po krilu ovisno o visini i tež.krila 2 or (3) per sash(dep. of height and weight of sash)	
Ručka za vrata 102.028	Door handle 102.028		2	
Četvrtka 102.025	Square spindle 102.025		1	
Cilindar (35-75) 122.095	Cylinder (35-75) 122.095		1	
Štitnik cilindra 122.098	Cylinder rosette 122.098		2	
Protuprovalni umetak 141.002	Security pin 141.002		2	
Vijak 433.094	Screw 433.094		3	
Staklo 44 mm	Glass 44 mm	(Lkr.-175)x(Hkr.-175)	1	

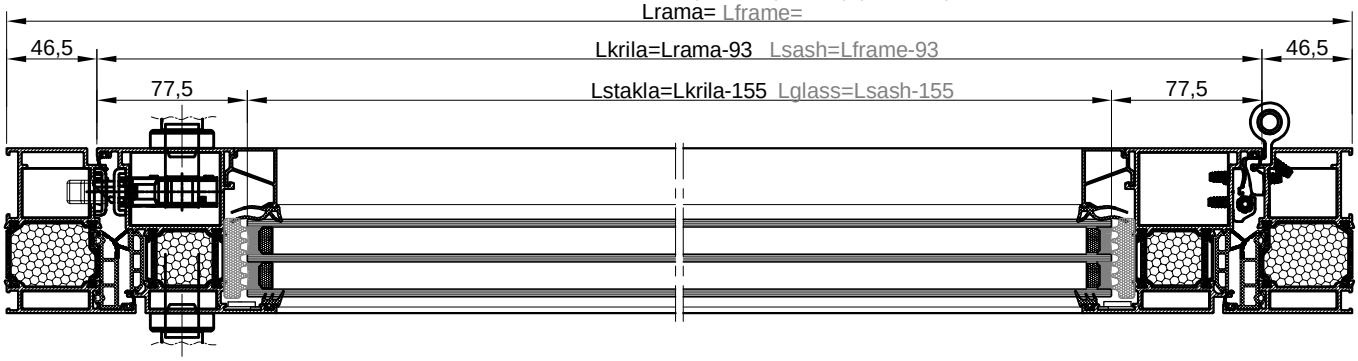


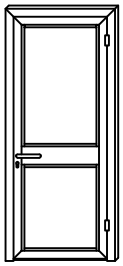




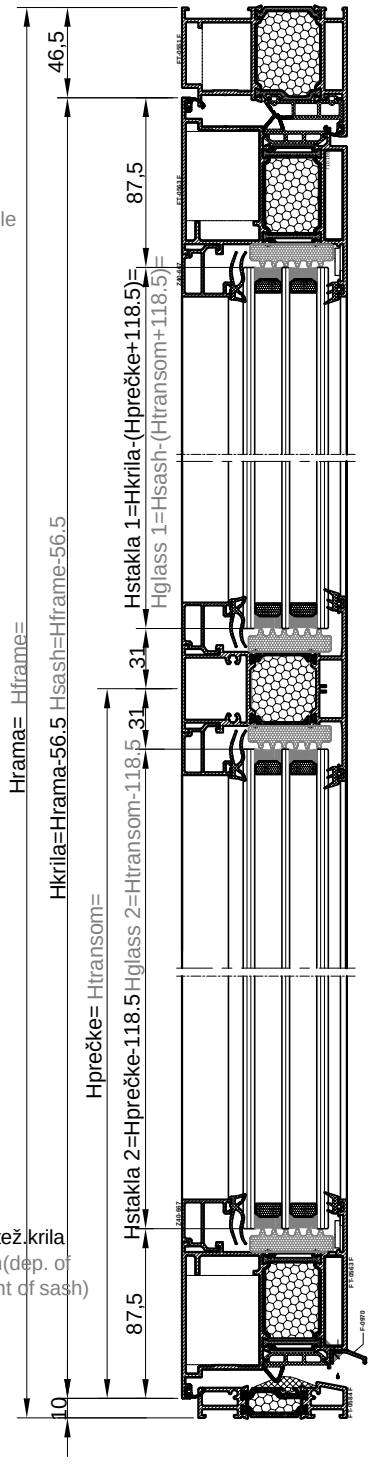
naziv name		mjera dimension	kom. pcs.	pilanje sawing angle
Ram FT-0551F	Frame FT-0551F	L	1	45-45
Ram FT-0551F	Frame FT-0551F	H	2	45-90
Krilo FT-0561F	Sash FT-0561F	L-93	2	45-45
Krilo FT-0561F	Sash FT-0561F	H-56.5	2	45-45
Prag FT-0584F	Threshold FT-0584F	L-164	1	90-90
Okapnica F-0970	Drip cap profile F-0970	Lkr-58	1	90-90
Staklo lajsna Z40-668	Glazing bead Z40-668	Lkr-141	4	90-90
Staklo lajsna Z40-668	Glazing bead Z40-668	Hpr.-137	2	90-90
Staklo lajsna Z40-668	Glazing bead Z40-668	H-(Hpr.+193.5)	2	90-90
Prečka FT-0575F	Transom FT-0575F	Lkr-128	1	90-90
Kutna spojnica 710.143	Corner bracket 710.143		2	
Kutna spojnica 710.141	Corner bracket 710.141		6	
Kutna spojnica 710.136	Corner bracket 710.136		4	
Kutna spojnica 731.010	Corner bracket 731.010		4	
Kutna spojnica 730.001	Corner bracket 730.001		10	
Veznik prečke 710.066	T bracket 710.066		4	
Veznik prečke 710.171	T bracket 710.171		4	
Centralna brtva rama 338.004	Central gasket-frame 338.004	1L + 2H		
Centralna brtva krila 338.006	Central gasket-sash 338.006	2Lkr+2Hkr		
Brtva na spoju rama i krila 317.002	Rebate gasket 317.002	3Lkr+4Hkr		
Brtva prema staklu vanjska 328.003	Glazing gasket -external- 328.003	4Lkr+2Hkr		
Brtva prema staklu unutarnja 311.004	Glazing gasket -internal- 311.004	4Lkr+2Hkr		
Brtva praga 331.012	Threshold gasket 331.012	L-164	1	90-90
Izolacijski umetak 340.013	Underglass insulator 340.013	4(Lkr-131)+2(Hpr.-108.5)+ 2/Hkr.-(Hpr.+108.5)		
Čep okapnice F-0970 375.001	End cap for F-0970 375.001		1 par	
Umetak na pragu 363.103	End cap for threshold 363.103		1 par	
Brava G-U Secury s MR2 (35) tri ključanja 122.016	Multipoint lock - G-U Secury MR2 (35) -122.016		1	
Prihvatna pločica 24x6x2 122.065	Striking plate 24x6x2 122.065		2	
Prihvatni lim 24x6 (lijevi) 122.064	Striking plate 24x6 (left) 122.064		1	
Trodijelna cilindrična šarka 112.011.01 - bijela	Barrel door hinge-3 part 112.011.01 - white		2 ili (3) po krilu ovisno o visini i tež.krila 2 or (3) per sash(dep. of height and weight of sash)	
Ručka za vrata 102.028	Door handle 102.028		2	
Četvrtka 102.025	Square spindle 102.025		1	
Cilindar (35-75) 122.095	Cylinder (35-75) 122.095		1	
Štitnik cilindra 122.098	Cylinder rosette 122.098		2	
Protuprovalni umetak 141.002	Security pin 141.002		2	
Vijak 433.094	Screw 433.094		3	
Staklo 40 mm	Glass 40 mm	(Lkr.-155)x(Hpr.-108.5)	1	
Staklo 40 mm	Glass 40 mm	(Lkr.-155)x/Hkr-(Hpr.+108.5)/	1	
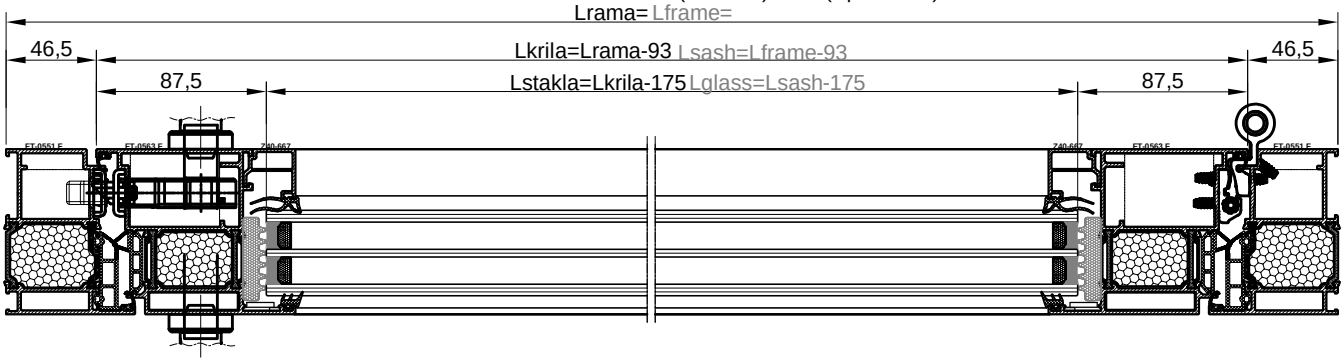


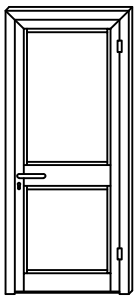




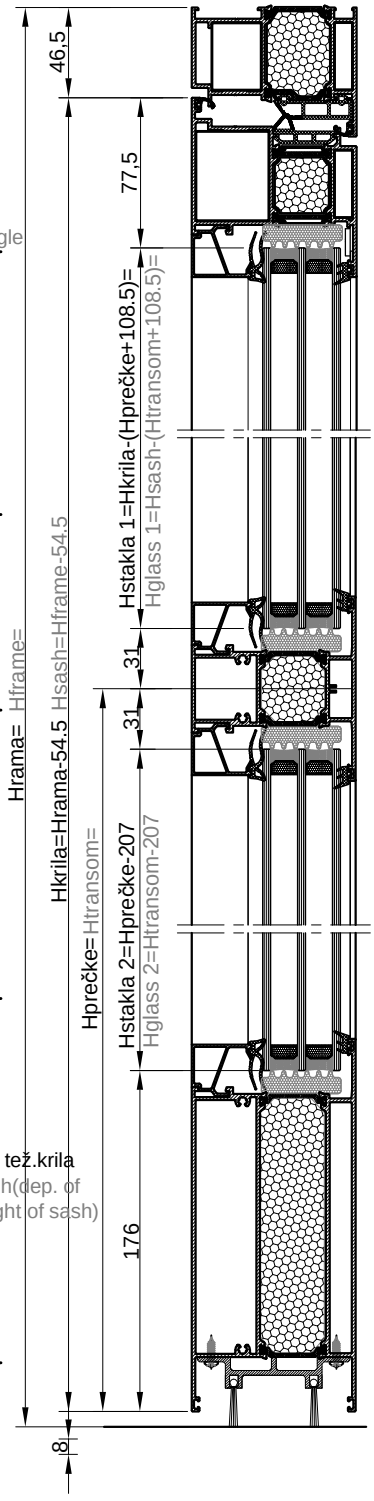
naziv name		mjera dimension	kom. pcs.	pilanje sawing angle
Ram FT-0551F	Frame FT-0551F	L	1	45-45
Ram FT-0551F	Frame FT-0551F	H	2	45-90
Krilo FT-0563F	Sash FT-0563F	L-93	2	45-45
Krilo FT-0563F	Sash FT-0563F	H-56.5	2	45-45
Prag FT-0584F	Threshold FT-0584F	L-164	1	90-90
Okapnica F-0970	Drip cap profile F-0970	Lkr-58	1	90-90
Staklo lajsna Z40-667	Glazing bead Z40-667	Lkr-161	4	90-90
Staklo lajsna Z40-667	Glazing bead Z40-667	Hpr.-147	2	90-90
Staklo lajsna Z40-667	Glazing bead Z40-667	H-(Hpr.+203.5)	2	90-90
Prečka FT-0575F	Transom FT-0575F	Lkr-151	1	90-90
Kutna spojnica 710.143	Corner bracket 710.143		2	
Kutna spojnica 710.141	Corner bracket 710.141		2	
Kutna spojnica 710.136	Corner bracket 710.136		4	
Kutna spojnica 710.169	Corner bracket 710.169		4	
Kutna spojnica 731.010	Corner bracket 731.010		4	
Kutna spojnica 730.001	Corner bracket 730.001		6	
Veznik prečke 710.066	T bracket 710.066		4	
Veznik prečke 710.171	T bracket 710.171		4	
Centralna brtva rama 338.004	Central gasket-frame 338.004	1L + 2H		
Centralna brtva krila 338.006	Central gasket-sash 338.006	2Lkr+2Hkr		
Brtva na spoju rama i krila 317.002	Rebate gasket 317.002	3Lkr+4Hkr		
Brtva prema staklu vanjska 328.003	Glazing gasket -external- 328.003	4Lkr+2Hkr		
Brtva prema staklu unutarnja 311.004	Glazing gasket -internal- 311.004	4Lkr+2Hkr		
Brtva praga 331.012	Threshold gasket 331.012	L-164	1	90-90
Izolacijski umetak 340.013	Underglass insulator 340.013	4(Lkr-151)+2(Hpr.-118.5)+ 2/Hkr.-(Hpr.+118.5)		
Čep okapnice F-0970 375.001	End cap for F-0970 375.001		1 par	
Umetak na pragu 363.103	End cap for threshold 363.103		1 par	
Brava G-U Secury s MR2 (45) tri ključanja 122.015	Multipoint lock - G-U Secury MR2 (45) -122.015		1	
Prihvatna pločica 24x6x2 122.065	Striking plate 24x6x2 122.065		2	
Prihvatni lim 24x6 (lijevi) 122.064	Striking plate 24x6 (left) 122.064		1	
Trodijelna cilindrična šarka 112.011.01 - bijela	Barrel door hinge-3 part 112.011.01 - white		2 ili (3) po krilu ovisno o visini i tež.krila 2 or (3) per sash(dep. of height and weight of sash)	
Ručka za vrata 102.028	Door handle 102.028		2	
Četvrtka 102.025	Square spindle 102.025		1	
Cilindar (35-75) 122.095	Cylinder (35-75) 122.095		1	
Štitnik cilindra 122.098	Cylinder rosette 122.098		2	
Protuprovalni umetak 141.002	Security pin 141.002		2	
Vijak 433.094	Screw 433.094		3	
Staklo 44 mm	Glass 44 mm	(Lkr.-175)x(Hpr.-118.5)	1	
Staklo 44 mm	Glass 44 mm	(Lkr.-175)x/Hkr-(Hpr.+118.5)/	1	

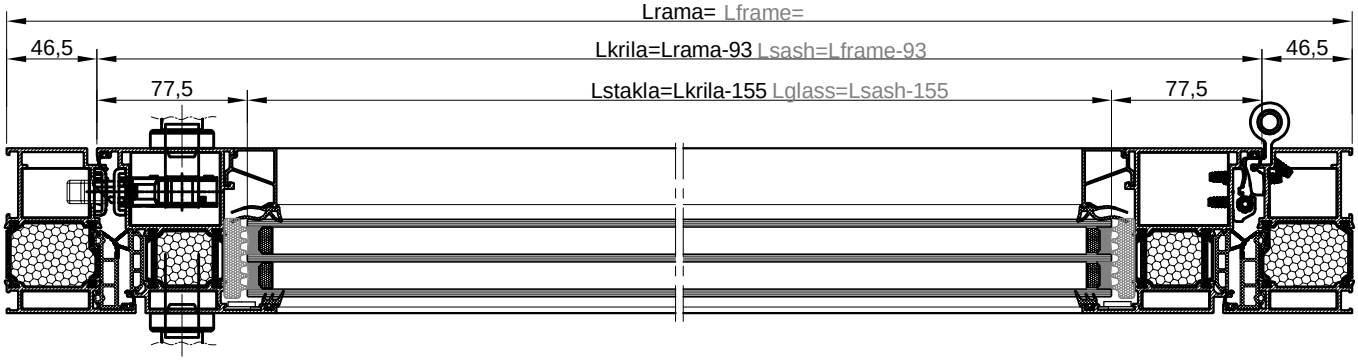


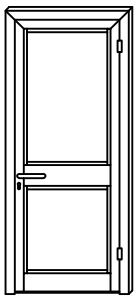




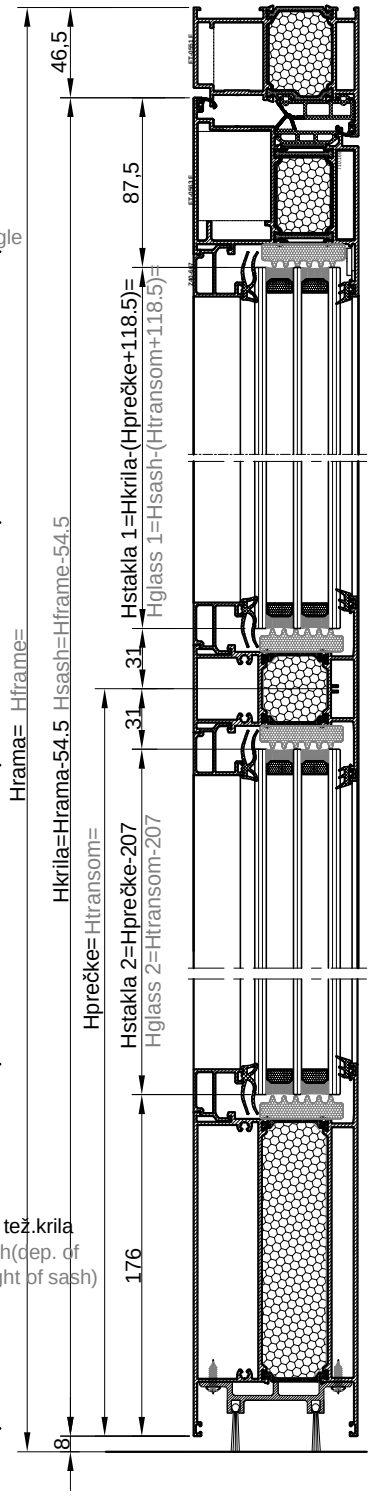
naziv name		mjera dimension	kom. pcs.	pilanje sawing angle
Ram FT-0551F	Frame FT-0551F	L	1	45-45
Ram FT-0551F	Frame FT-0551F	H	2	45-90
Krilo FT-0561F	Sash FT-0561F	L-93	1	45-45
Krilo FT-0561F	Sash FT-0561F	H-54.5	2	45-90
Staklo lajsna Z40-668	Glazing bead Z40-668	Lkr-141	4	90-90
Staklo lajsna Z40-668	Glazing bead Z40-668	Hpr.-233.5	2	90-90
Staklo lajsna Z40-668	Glazing bead Z40-668	H-(Hpr.+191.5)	2	90-90
Prečka FT-0575F	Transom FT-0575F	Lkr-128	1	90-90
Parapetna prečka FT-0576F	Transom-bott. sash profile FT-0576F	Lkr-128	1	90-90
Kutna spojnica 710.143	Corner bracket 710.143		2	
Kutna spojnica 710.141	Corner bracket 710.141		4	
Kutna spojnica 710.136	Corner bracket 710.136		2	
Kutna spojnica 731.010	Corner bracket 731.010		2	
Kutna spojnica 730.001	Corner bracket 730.001		6	
Veznik prečke 710.066	T bracket 710.066		8	
Veznik prečke 710.171	T bracket 710.171		8	
Centralna brtva rama 338.004	Central gasket-frame 338.004	1L+2H		
Centralna brtva krila 338.006	Central gasket-sash 338.006	1Lkr+2Hkr		
Brtva na spoju rama i krila 317.002	Rebate gasket 317.002	2Lkr+4Hkr		
Brtva prema staklu vanjska 328.003	Glazing gasket -external- 328.003	4Lkr+2Hkr		
Brtva prema staklu unutarnja 311.004	Glazing gasket -internal- 311.004	4Lkr+2Hkr		
Izolacijski umetak 340.013	Underglass insulator 340.013	4(Lkr-131)+2(Hpr.-207) +2/Hkr.-(Hpr.+108.5)		
Pvc umetak u parap. prečki 374.048	Pvc profile for transom /bottom sash profile/ 374.048	Lkr-33	1	
Četkasta brtva 347.001	Brush seal 347.001		2	
Brava G-U Secury s MR2 (35) tri ključanja 122.016	Multipoint lock - G-U Secury MR2 (35) - 122.016		1	
Prihvatna pločica 24x6x2 122.065	Striking plate 24x6x2 122.065		2	
Prihvatni lim 24x6 (lijevi) 122.064	Striking plate 24x6 (left) 122.064		1	
Trodijelna cilindrična šarka 112.011.01 - bijela	Barrel door hinge-3 part 112.011.01 - white		2 ili (3) po krilu ovisno o visini i tež.krila 2 or (3) per sash(dep. of height and weight of sash)	
Ručka za vrata 102.028	Door handle 102.028		2	
Četvrtka 102.025	Square spindle 102.025		1	
Cilindar (35-75) 122.095	Cylinder (35-75) 122.095		1	
Štitnik cilindra 122.098	Cylinder rosette 122.098		2	
Protuprovalni umetak 141.002	Security pin 141.002		2	
Staklo 40 mm	Glass 40 mm	(Lkr.-155)x(Hpr.-207)	1	
Staklo 40 mm	Glass 40 mm	(Lkr.-155)x/Hkr-(Hpr.+108.5)/	1	



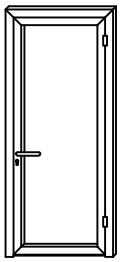




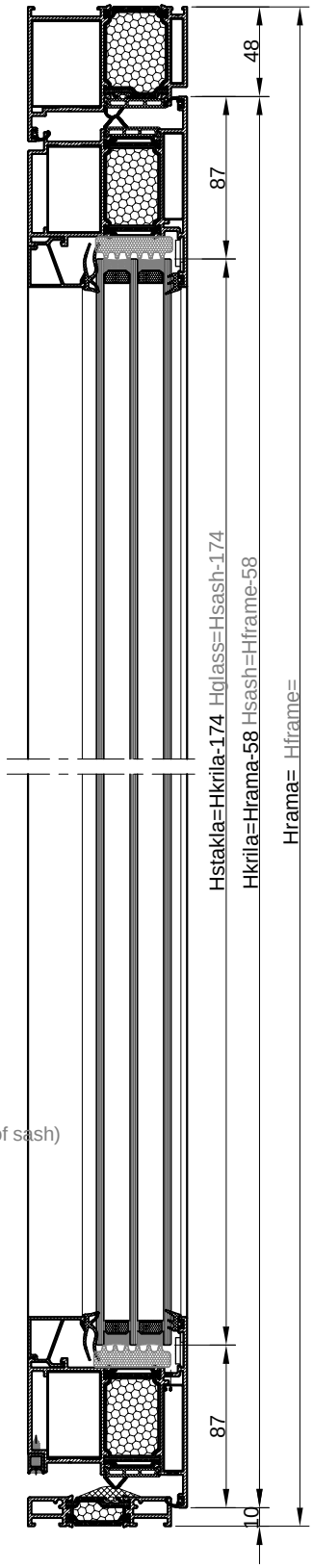
naziv name		mjera dimension	kom. pcs.	pilanje sawing angle
Ram FT-0551F	Frame FT-0551F	L	1	45-45
Ram FT-0551F	Frame FT-0551F	H	2	45-90
Krilo FT-0563F	Sash FT-0563F	L-93	1	45-45
Krilo FT-0563F	Sash FT-0563F	H-54.5	2	45-90
Staklo lajsna Z40-667	Glazing bead Z40-667	Lkr-161	4	90-90
Staklo lajsna Z40-667	Glazing bead Z40-667	Hpr.-233.5	2	90-90
Staklo lajsna Z40-667	Glazing bead Z40-667	H-(Hpr.+201.5)	2	90-90
Prečka FT-0575F	Transom FT-0575F	Lkr-151	1	90-90
Parapetna prečka FT-0576F	Transom-bottom sash profile FT-0576F	Lkr-151	1	90-90
Kutna spojnica 710.143	Corner bracket 710.143		2	
Kutna spojnica 710.141	Corner bracket 710.141		2	
Kutna spojnica 710.136	Corner bracket 710.136		2	
Kutna spojnica 710.169	Corner bracket 710.169		2	
Kutna spojnica 731.010	Corner bracket 731.010		2	
Kutna spojnica 730.001	Corner bracket 730.001		4	
Veznik prečke 710.066	T bracket 710.066		8	
Veznik prečke 710.171	T bracket 710.171		8	
Centralna brtva rama 338.004	Central gasket-frame 338.004	1L+2H		
Centralna brtva krila 338.006	Central gasket-sash 338.006	1Lkr+2Hkr		
Brtva na spoju rama i krila 317.002	Rebate gasket 317.002	2Lkr+4Hkr		
Brtva prema staklu vanjska 328.003	Glazing gasket -external- 328.003	4Lkr+2Hkr		
Brtva prema staklu unut. 311.004	Glazing gasket -internal- 311.004	4Lkr+2Hkr		
Izolacijski umetak 340.013	Underglass insulator 340.013	4(Lkr-151)+2(Hpr.-207) +2/Hkr.-(Hpr.+118.5)		
Pvc umetak u parap. prečki 374.048	Pvc profile for transom /bottom sash profile/ 374.048	Lkr-33	1	
Četkasta brtva 347.001	Brush seal 347.001		2	
Brava G-U Secury s MR2 (45) tri ključanja 122.015	Multipoint lock - G-U Secury MR2 (45) -122.015		1	
Prihvatna pločica 24x6x2 122.065	Striking plate 24x6x2 122.065		2	
Prihvatni lim 24x6 (lijevi) 122.064	Striking plate 24x6 (left) 122.064		1	
Trodijelna cilindrična šarka 112.011.01 - bijela	Barrel door hinge-3 part 112.011.01 - white		2 ili (3) po krilu ovisno o visini i tež.krila 2 or (3) per sash(dep. of height and weight of sash)	
Ručka za vrata 102.028	Door handle 102.028		2	
Četvrtka 102.025	Square spindle 102.025		1	
Cilindar (35-75) 122.095	Cylinder (35-75) 122.095		1	
Štitnik cilindra 122.098	Cylinder rosette 122.098		2	
Protuprovalni umetak 141.002	Security pin 141.002		2	
Staklo 44 mm	Glass 44 mm	(Lkr.-175)x(Hpr.-207)	1	
Staklo 44 mm	Glass 44 mm	(Lkr.-175)x/Hkr-(Hpr.+118.5)/	1	

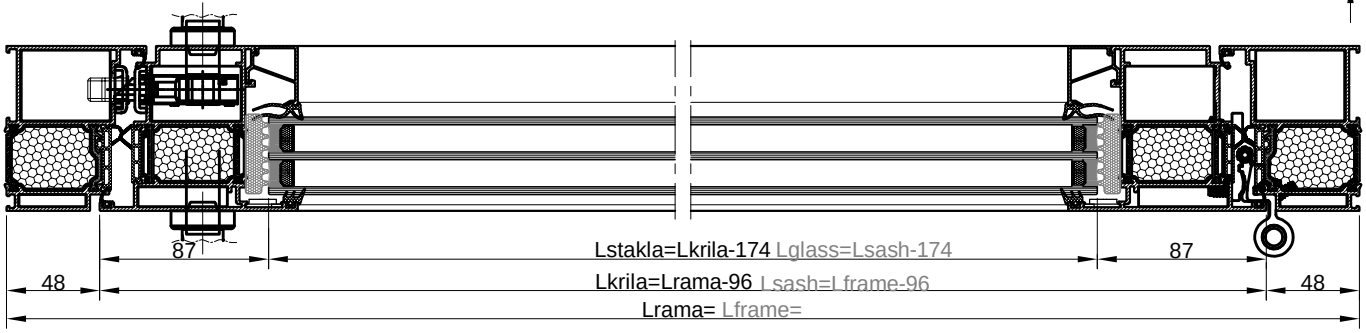


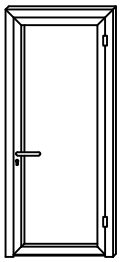




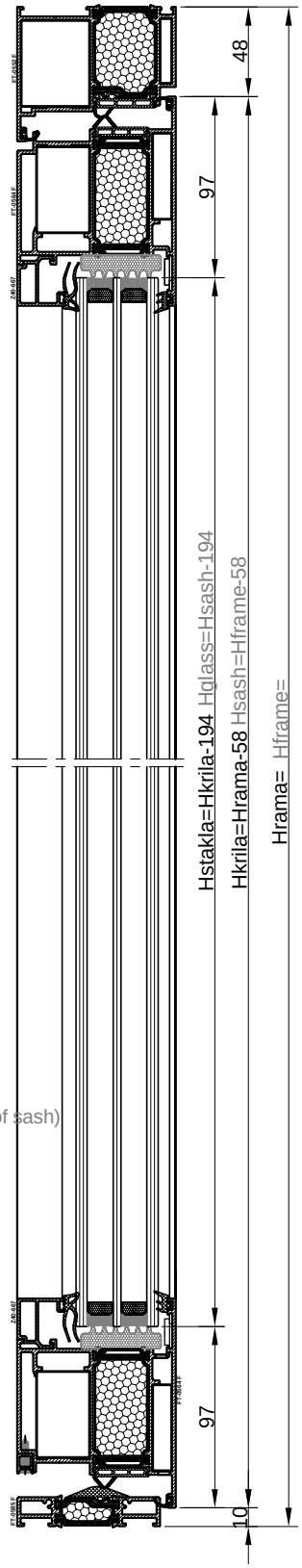
naziv name		mjera dimension	kom. pcs.	pilanje sawing angle
Ram FT-0552F	Frame FT-0552F	L	1	45-45
Ram FT-0552F	Frame FT-0552F	H	2	45-90
Krilo FT-0562F	Sash FT-0562F	L-96	2	45-45
Krilo FT-0562F	Sash FT-0562F	H-58	2	45-45
Prag FT-0585F	Threshold FT-0585F	L-154	1	90-90
Umetak F-1188	Additional profile F-1188	Lkr-58	1	90-90
Staklo lajsna Z40-668	Glazing bead Z40-668	Lkr-160	2	90-90
Staklo lajsna Z40-668	Glazing bead Z40-668	Hkr-204	2	90-90
Kutna spojnica 710.131	Corner bracket 710.131		2	
Kutna spojnica 710.133	Corner bracket 710.133		4	
Kutna spojnica 710.140	Corner bracket 710.140		2	
Kutna spojnica 710.134	Corner bracket 710.134		4	
Kutna spojnica 731.010	Corner bracket 731.010		4	
Kutna spojnica 730.001	Corner bracket 730.001		10	
Centralna brtva rama 338.009	Central gasket-frame 338.009	1L+2H		
Centralna brtva krila 338.010	Central gasket-sash 338.010	2Lkr+2Hkr		
Centralna brtva praga 331.012	Threshold gasket 331.012	L-154	1	90-90
Brtva prema staklu vanjska 328.003	Glazing gasket -external- 328.003	2Lkr+2Hkr		
Brtva prema staklu unutarnja 311.004	Glazing gasket -internal- 311.004	2Lkr+2Hkr		
Brtva na spoju rama i krila 317.002	Rebate gasket 317.002	(1Lrama+2Hrama)+(2Lkr+2Hkr)		
Izolacijski umetak 340.013	Underglass insulator 340.013	2(Lkr-150)+2(Hkr-174)		
Umetak na pragu 373.020	End cap for threshold 373.020	1 par		
Brava G-U Secury s MR2 (35) tri ključanja 122.016	Multipoint lock - G-U Secury MR2 (35) -122.016		1	
Prihvatna pločica 24x6x2 122.065	Striking plate 24x6x2 122.065		2	
Prihvatni lim 24x6 (desni) 122.063	Striking plate 24x6 (right) 122.063		1	
Trodijelna cilindrična šarka 112.012.01 - bijela	Barrel door hinge-3 part 112.012.01 - white	2 ili (3) po krilu ovisno o visini i tež.krila 2 or (3) per sash(dep. of height and weight of sash)		
Ručka za vrata 102.028	Door handle 102.028		2	
Četvrtka 102.025	Square spindle 102.025		1	
Cilindar (35-75) 122.095	Cylinder (35-75) 122.095		1	
Štitnik cilindra 122.098	Cylinder rosette 122.098		2	
Protuprovalni umetak 141.002	Security pin 141.002		2	
Vijak 433.093	Screw 433.093		3	
Staklo 40 mm	Glass 40 mm	(Lkr.-174)x(Hkr.-174)	1	

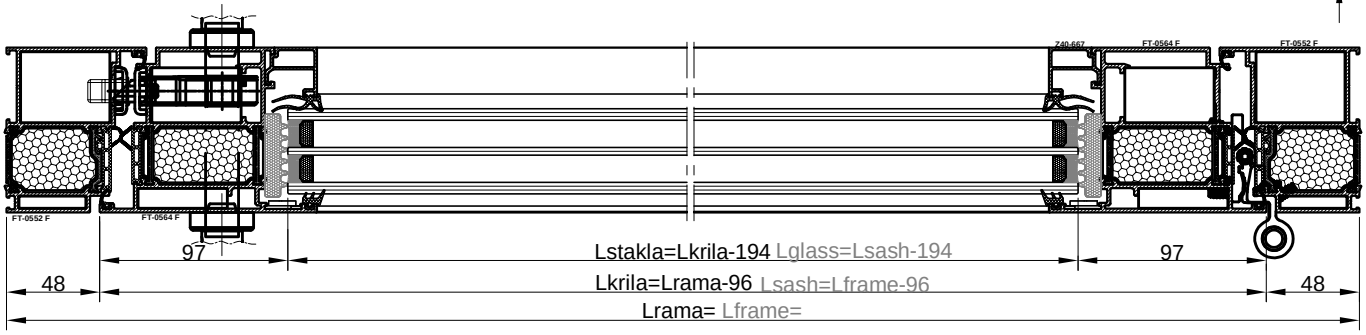


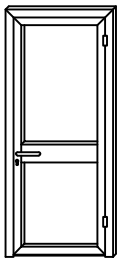




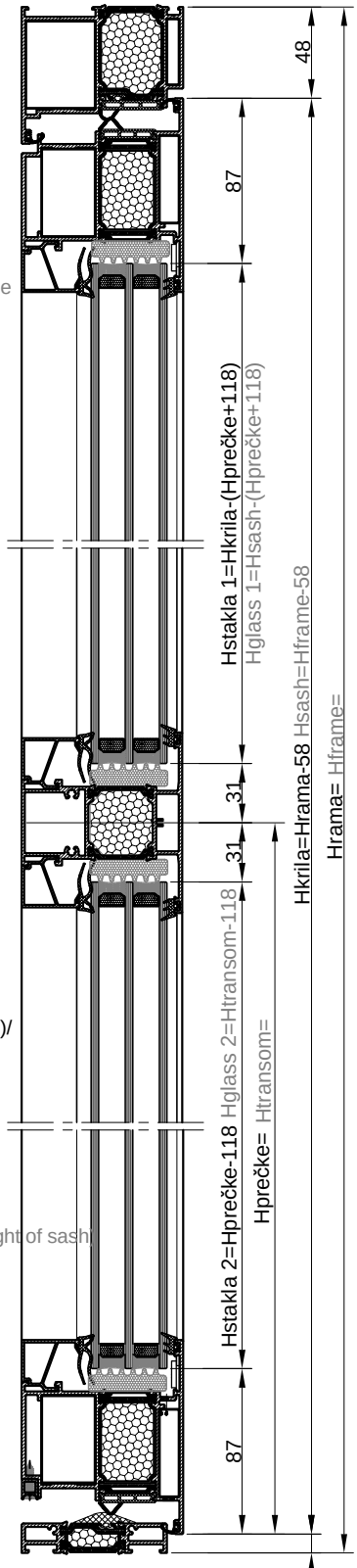
naziv name		mjera dimension	kom. pcs.	pilanje sawing angle
Ram FT-0552F	Frame FT-0552F	L	1	45-45
Ram FT-0552F	Frame FT-0552F	H	2	45-90
Krilo FT-0564F	Sash FT-0564F	L-96	2	45-45
Krilo FT-0564F	Sash FT-0564F	H-58	2	45-45
Prag FT-0585F	Threshold FT-0585F	L-154	1	90-90
Umetak F-1188	Additional profile F-1188	Lkr-58	1	90-90
Staklo lajsna Z40-667	Glazing bead Z40-667	Lkr-180	2	90-90
Staklo lajsna Z40-667	Glazing bead Z40-667	Hkr-224	2	90-90
Kutna spojnica 710.131	Corner bracket 710.131		2	
Kutna spojnica 710.133	Corner bracket 710.133		4	
Kutna spojnica 710.140	Corner bracket 710.140		2	
Kutna spojnica 710.134	Corner bracket 710.134		4	
Kutna spojnica 731.010	Corner bracket 731.010		4	
Kutna spojnica 730.001	Corner bracket 730.001		6	
Centralna brtva rama 338.009	Central gasket-frame 338.009	1L+2H		
Centralna brtva krila 338.010	Central gasket-sash 338.010	2Lkr+2Hkr		
Centralna brtva praga 331.012	Threshold gasket 331.012	L-154	1	90-90
Brtva prema staklu vanjska 328.003	Glazing gasket -external- 328.003	2Lkr+2Hkr		
Brtva prema staklu unutarnja 311.004	Glazing gasket -internal- 311.004	2Lkr+2Hkr		
Brtva na spoju rama i krila 317.002	Rebate gasket 317.002	(1Lrama+2Hrama)+(2Lkr+2Hkr)		
Izolacijski umetak 340.013	Underglass insulator 340.013	2(Lkr-170)+2(Hkr-194)		
Umetak na pragu 373.020	End cap for threshold 373.020	1 par		
Brava G-U Secury s MR2 (45) tri ključanja 122.015	Multipoint lock - G-U Secury MR2 (45) -122.015		1	
Prihvatna pločica 24x6x2 122.065	Striking plate 24x6x2 122.065		2	
Prihvatni lim 24x6 (desni) 122.063	Striking plate 24x6 (right) 122.063		1	
Trodijelna cilindrična šarka 112.012.01 - bijela	Barrel door hinge-3 part 112.012.01 - white	2 ili (3) po krilu ovisno o visini i tež.krila 2 or (3) per sash(dep. of height and weight of sash)		
Ručka za vrata 102.028	Door handle 102.028		2	
Četvrtka 102.025	Square spindle 102.025		1	
Cilindar (35-75) 122.095	Cylinder (35-75) 122.095		1	
Štitnik cilindra 122.098	Cylinder rosette122.098		2	
Protuprovalni umetak 141.002	Security pin 141.002		2	
Vijak 433.093	Screw 433.093		3	
Staklo 44 mm	Glass 44 mm	(Lkr.-194)x(Hkr.-194)	1	

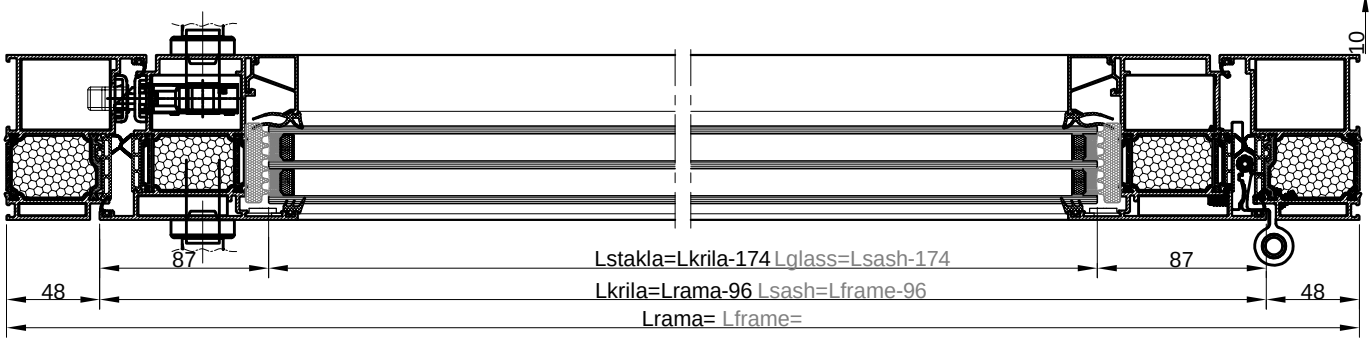


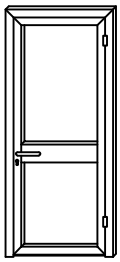




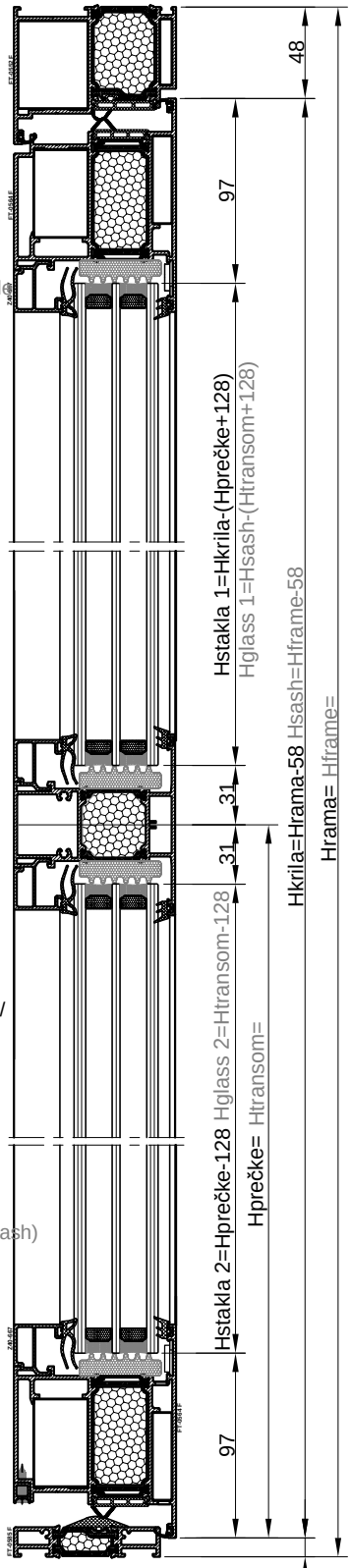
naziv name		mjera dimension	kom. pcs.	pilanje sawing angle
Ram FT-0552F	Frame FT-0552F	L	1	45-45
Ram FT-0552F	Frame FT-0552F	H	2	45-90
Krilo FT-0562F	Sash FT-0562F	L-96	2	45-45
Krilo FT-0562F	Sash FT-0562F	H-58	2	45-45
Prag FT-0585F	Threshold FT-0585F	L-154	1	90-90
Umetak F-1188	Additional profile F-1188	Lkr-58	1	90-90
Staklo lajsna Z40-668	Glazing bead Z40-668	Lkr-160	4	90-90
Staklo lajsna Z40-668	Glazing bead Z40-668	Hpreč.-146.5	2	90-90
Staklo lajsna Z40-668	Glazing bead Z40-668	H-(Hpreč.+204.5)	2	90-90
Prečka FT-0575F	Transom FT-0575F	Lkr-147	1	90-90
Kutna spojnica 710.131	Corner bracket 710.131		2	
Kutna spojnica 710.133	Corner bracket 710.133		4	
Kutna spojnica 710.140	Corner bracket 710.140		2	
Kutna spojnica 710.134	Corner bracket 710.134		4	
Kutna spojnica 731.010	Corner bracket 731.010		4	
Kutna spojnica 730.001	Corner bracket 730.001		6	
Veznik prečke 710.066	T bracket 710.066		4	
Veznik prečke 710.171	T bracket 710.171		4	
Centralna brtva rama 338.009	Central gasket-frame 338.009	1L+2H		
Centralna brtva krila 338.010	Central gasket-sash 338.010	2Lkr+2Hkr		
Brtva prema staklu vanjska 328.003	Glazing gasket -external- 328.003	4Lkr+2Hkr		
Brtva prema staklu unutarnja 311.004	Glazing gasket -internal- 311.004	4Lkr+2Hkr		
Brtva na spoju rama i krila 317.002	Rebate gasket 317.002	1L+2H+2Lkr+2Hkr		
Brtva praga 331.012	Threshold gasket 331.012	L-154	1	90-90
Izolacijski umetak 340.013	Underglass insulator 340.013	4(Lkr-170)+2(Hpr.-118)+2/Hkr-(Hpr+118)/		
Umetak na pragu 373.020	End cap for threshold 373.020		1 par	
Brava G-U Secury s MR2 (35) tri ključanja 122.016	Multipoint lock - G-U Secury MR2 (35) -122.016		1	
Prihvatna pločica 24x6x2 122.065	Striking plate 24x6x2 122.065		2	
Prihvatni lim 24x6 (desni) 122.063	Striking plate 24x6 (right) 122.063		1	
Trodijelna cilindrična šarka 112.012.01 - bijela	Barrel door hinge-3 part 112.012.01 - white	2 ili (3) po krilu ovisno o visini i tež.krila 2 or (3) per sash(dep. of height and weight of sash)		
Ručka za vrata 102.028	Door handle 102.028		2	
Četvrtka 102.025	Square spindle 102.025		1	
Cilindar (35-75) 122.095	Cylinder (35-75) 122.095		1	
Štitnik cilindra 122.098	Cylinder rosette 122.098		2	
Protuprovalni umetak 141.002	Security pin 141.002		2	
Vijak 433.093	Screw 433.093		3	
Staklo 40 mm	Glass 40 mm	(Lkr.-174)x(Hpr.-118)		1
Staklo 40 mm	Glass 40 mm	(Lkr.-174)x/Hkr-(Hpr.+118)/		1



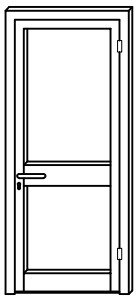




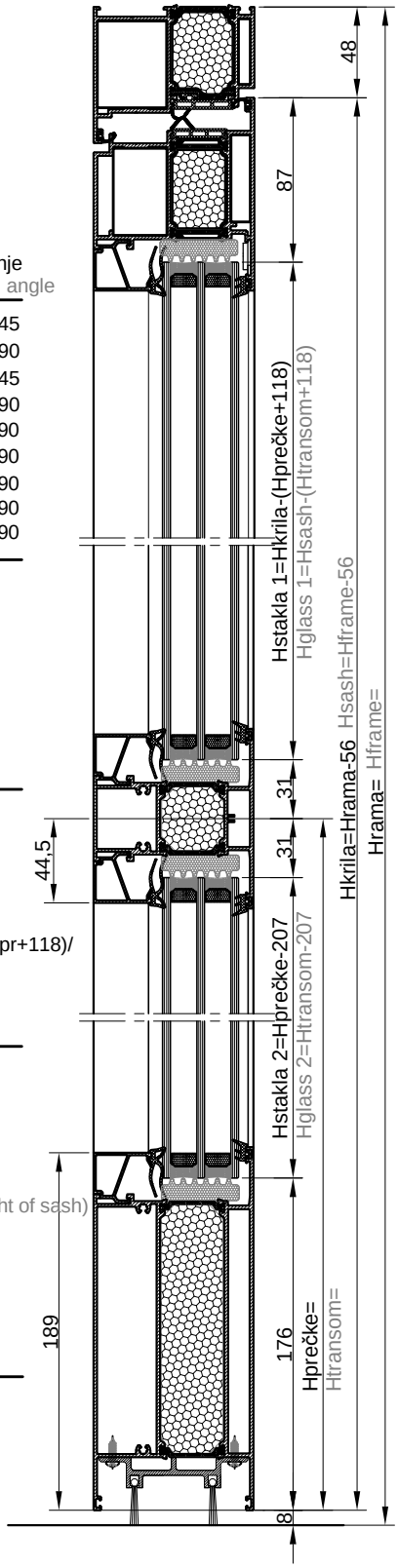
naziv name		mjera dimension	kom. pcs.	pilanje sawing angle
Ram FT-0552F	Frame FT-0552F	L	1	45-45
Ram FT-0552F	Frame FT-0552F	H	2	45-90
Krilo FT-0564F	Sash FT-0564F	L-96	2	45-45
Krilo FT-0564F	Sash FT-0564F	H-58	2	45-45
Prag FT-0585F	Threshold FT-0585F	L-154	1	90-90
Umetak F-1188	Additional profile F-1188	Lkr-58	1	90-90
Staklo lajsna Z40-667	Glazing bead Z40-667	Lkr-180	4	90-90
Staklo lajsna Z40-667	Glazing bead Z40-667	Hpreč.-146.5	2	90-90
Staklo lajsna Z40-667	Glazing bead Z40-667	H-(Hpreč.+212.5)	2	90-90
Prečka FT-0575F	Transom FT-0575F	Lkr-167	1	90-90
Kutna spojnica 710.131	Corner bracket 710.131		2	
Kutna spojnica 710.133	Corner bracket 710.133		4	
Kutna spojnica 710.140	Corner bracket 710.140		2	
Kutna spojnica 710.134	Corner bracket 710.134		4	
Kutna spojnica 731.010	Corner bracket 731.010		4	
Kutna spojnica 730.001	Corner bracket 730.001		10	
Veznik prečke 710.066	T bracket 710.066		4	
Veznik prečke 710.171	T bracket 710.171		4	
Centralna brtva rama 338.009	Central gasket-frame 338.009	1L+2H		
Centralna brtva krila 338.010	Central gasket-sash 338.010	2Lkr+2Hkr		
Brtva prema staklu vanjska 328.003	Glazing gasket -external- 328.003	4Lkr+2Hkr		
Brtva prema staklu unutarnja 311.004	Glazing gasket -internal- 311.004	4Lkr+2Hkr		
Brtva na spoju rama i krila 317.002	Rebate gasket 317.002	1L+2H+2Lkr+2Hkr		
Brtva praga 331.012	Threshold gasket 331.012	L-154	1	90-90
Izolacijski umetak 340.013	Underglass insulator 340.013	4(Lkr-150)+2(Hpr.-128)+2/Hkr-(Hpr+128)/		
Umetak na pragu 373.020	End cap for threshold 373.020		1 par	
Brava G-U Secury s MR2 (45) tri ključanja 122.015	Multipoint lock - G-U Secury MR2 (45) -122.015		1	
Prihvatna pločica 24x6x2 122.065	Striking plate 24x6x2 122.065		2	
Prihvatni lim 24x6 (desni) 122.063	Striking plate 24x6 (right) 122.063		1	
Trodijelna cilindrična šarka 112.012.01 - bijela	Barrel door hinge-3 part 112.012.01 - white	2 ili (3) po krilu ovisno o visini i tež.krila 2 or (3) per sash(dep. of height and weight of sash)		
Ručka za vrata 102.028	Door handle 102.028		2	
Četvrtka 102.025	Square spindle 102.025		1	
Cilindar (35-75) 122.095	Cylinder (35-75) 122.095		1	
Štitnik cilindra 122.098	Cylinder rosette 122.098		2	
Protuprovalni umetak 141.002	Security pin 141.002		2	
Vijak 433.093	Screw 433.093		3	
Staklo 44 mm	Glass 44 mm	(Lkr.-194)x(Hpr.-128)	1	
Staklo 44 mm	Glass 44 mm	(Lkr.-194)x/Hkr-(Hpr.+128)/	1	

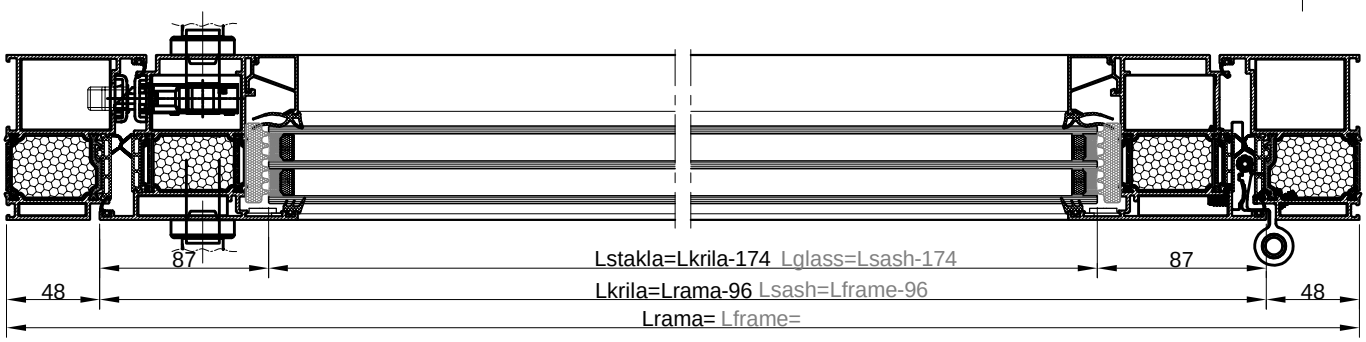


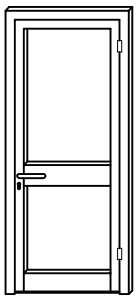




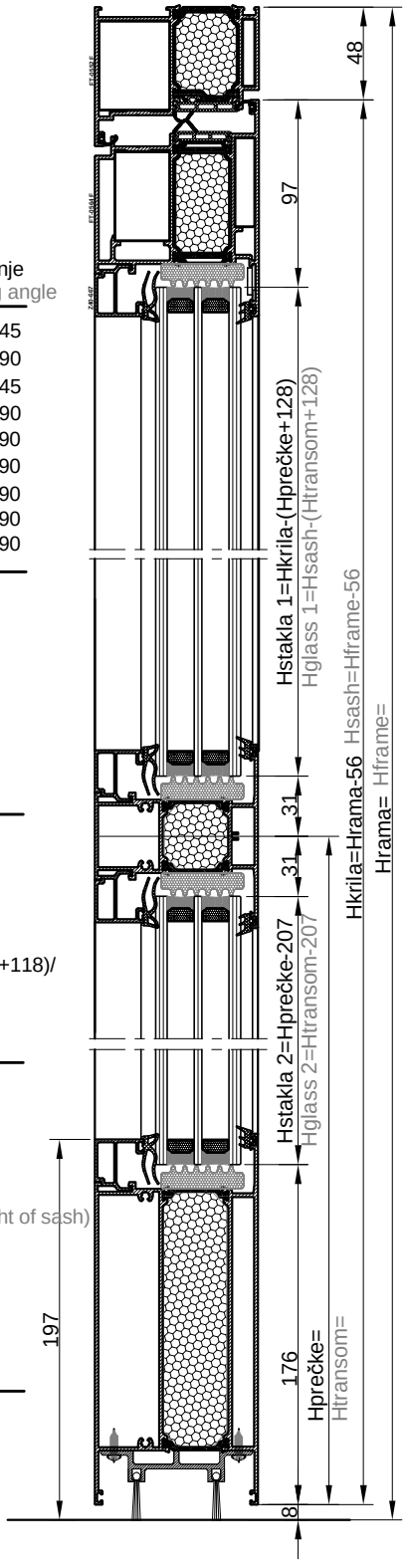
naziv name		mjera dimension	kom. pcs.	pilanje sawing angle
Ram FT-0552F	Frame FT-0552F	L	1	45-45
Ram FT-0552F	Frame FT-0552F	H	2	45-90
Krilo FT-0562F	Sash FT-0562F	L-96	1	45-45
Krilo FT-0562F	Sash FT-0562F	H-56	2	45-90
Staklo lajsna Z40-668	Glazing bead Z40-668	Lkr-160	4	90-90
Staklo lajsna Z40-668	Glazing bead Z40-668	Hpreč.-233.5	2	90-90
Staklo lajsna Z40-668	Glazing bead Z40-668	Hkr-(Hpreč.+146.5)	2	90-90
Prečka FT-0575F	Transom FT-0575F	Lkr-147	1	90-90
Parapetna prečka FT-0576F	Transom-bottom sash prof. FT-0576F	Lkr-147	1	90-90
Kutna spojnica 710.131	Corner bracket 710.131		2	
Kutna spojnica 710.133	Corner bracket 710.133		2	
Kutna spojnica 710.140	Corner bracket 710.140		2	
Kutna spojnica 710.134	Corner bracket 710.134		2	
Kutna spojnica 731.010	Corner bracket 731.010		2	
Kutna spojnica 730.001	Corner bracket 730.001		6	
Veznik prečke 710.066	T bracket 710.066		8	
Veznik prečke 710.171	T bracket 710.171		8	
Centralna brtva rama 338.009	Central gasket-frame 338.009	1L+2H		
Centralna brtva krila 338.010	Central gasket-sash 338.010	1Lkr+2Hkr		
Brtva prema staklu vanjska 328.003	Glazing gasket -external- 328.003	4Lkr+2Hkr		
Brtva prema staklu unutarnja 311.004	Glazing gasket -internal- 311.004	4Lkr+2Hkr		
Brtva na spoju rama i krila 317.002	Rebate gasket 317.002	(1Lrama+2Hrama)+(1Lkr+2Hkr)		
Izolacijski umetak 340.013	Underglass insulator 340.013	4(Lkr-150)+2(Hpr.-207)+2/Hkr-(Hpr+118)/		
Pvc umetak u parapet. prečki 374.048	Pvc prof. for transom /bottom sash prof./ 374.048	Lkr-54	1	
Četkasta brtva 347.001	Brush seal 347.001		2	
Brava G-U Secury s MR2 (35) tri ključanja 122.016	Multipoint lock - G-U Secury MR2 (35) -122.016		1	
Prihvatna pločica 24x6x2 122.065	Striking plate 24x6x2 122.065		2	
Prihvatni lim 24x6 (desni) 122.063	Striking plate 24x6 (right) 122.063		1	
Trodijelna cilindrična šarka 112.012.01 - bijela	Barrel door hinge-3 part 112.012.01 - white	2 ili (3) po krilu ovisno o visini i tež.krila 2 or (3) per sash(dep. of height and weight of sash)		
Ručka za vrata 102.028	Door handle 102.028		2	
Četvrtka 102.025	Square spindle 102.025		1	
Cilindar (35-75) 122.095	Cylinder (35-75) 122.095		1	
Štitnik cilindra 122.098	Cylinder rosette 122.098		2	
Protuprovalni umetak 141.002	Security pin 141.002		2	
Staklo 40 mm	Glass 40 mm	(Lkr.-174)x(Hpr.-207)	1	
Staklo 40 mm	Glass 40 mm	(Lkr.-174)x/Hkr-(Hpr.+118)/	1	

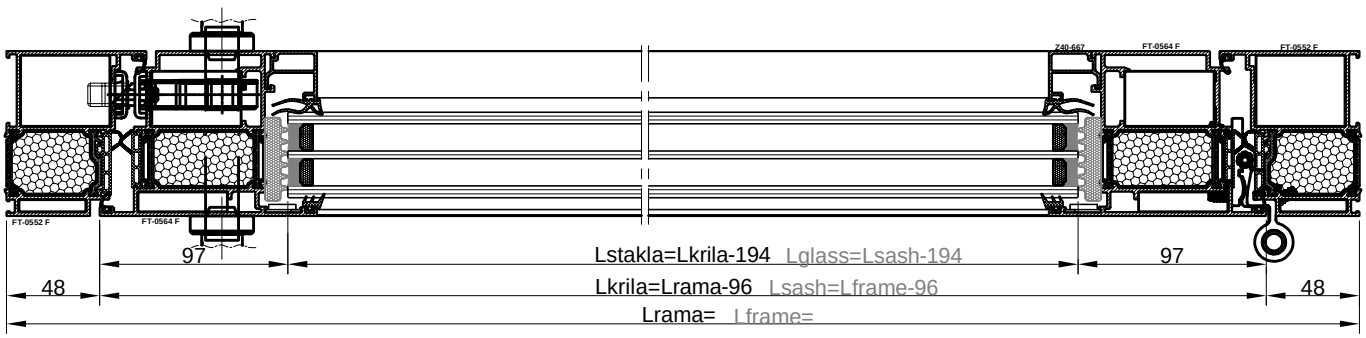


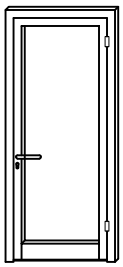




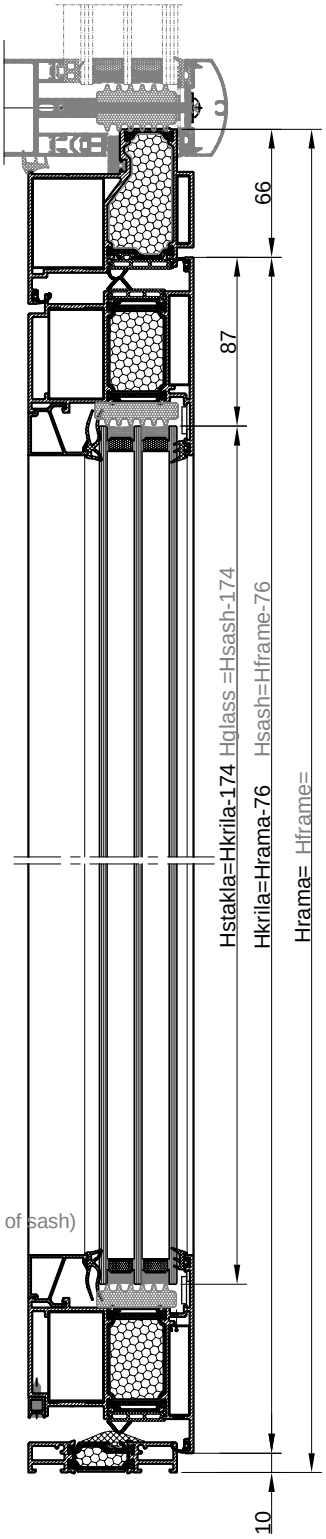
naziv name		mjera dimension	kom. pcs.	pilanje sawing angle
Ram FT-0552F	Frame FT-0552F	L	1	45-45
Ram FT-0552F	Frame FT-0552F	H	2	45-90
Krilo FT-0564F	Sash FT-0564F	L-96	1	45-45
Krilo FT-0564F	Sash FT-0564F	H-56	2	45-90
Staklo lajsna Z40-667	Glazing bead Z40-667	Lkr-180	4	90-90
Staklo lajsna Z40-667	Glazing bead Z40-667	Hpreč.-241.5	2	90-90
Staklo lajsna Z40-667	Glazing bead Z40-667	Hkr-(Hpreč.+156.5)	2	90-90
Prečka FT-0575F	Transom FT-0575F	Lkr-167	1	90-90
Parapetna prečka FT-0576F	Tran.-bottom sash prof. FT-0576F	Lkr-167	1	90-90
Kutna spojnica 710.131	Corner bracket 710.131		2	
Kutna spojnica 710.133	Corner bracket 710.133		2	
Kutna spojnica 710.140	Corner bracket 710.140		2	
Kutna spojnica 710.134	Corner bracket 710.134		2	
Kutna spojnica 731.010	Corner bracket 731.010		4	
Kutna spojnica 730.001	Corner bracket 730.001		2	
Veznik prečke 710.066	T bracket 710.066		8	
Veznik prečke 710.171	T bracket 710.171		8	
Centralna brtva rama 338.009	Central gasket-frame 338.009	1L+2H		
Centralna brtva krila 338.010	Central gasket-sash 338.010	1Lkr+2Hkr		
Brtva prema staklu vanjska 328.003	Glazing gasket -external- 328.003	4Lkr+2Hkr		
Brtva prema staklu unutarnja 311.004	Glazing gasket -internal- 311.004	4Lkr+2Hkr		
Brtva na spoju rama i krila 317.002	Rebate gasket 317.002	(1Lrama+2Hrama)+(1Lkr+2Hkr)		
Izolacijski umetak 340.013	Underglass insulator 340.013	4(Lkr-150)+2(Hpr.-207)+2/Hkr-(Hpr+118)/		
Pvc umetak u parapet. prečki 374.048	Pvc prof. for transom /bottom sash prof./ 374.048	Lkr-54	1	
Četkasta brtva 347.001	Brush seal 347.001	Lkr-54	2	
Brava G-U Secury s MR2 (45) tri ključanja 122.015	Multipoint lock - G-U Secury MR2 (45) -122.015		1	
Prihvatna pločica 24x6x2 122.065	Striking plate 24x6x2 122.065		2	
Prihvatni lim 24x6 (desni) 122.063	Striking plate 24x6 (right) 122.063		1	
Trodijelna cilindrična šarka 112.012.01 - bijela	Barrel door hinge-3 part 112.012.01 - white	2 ili (3) po krilu ovisno o visini i tež.krila 2 or (3) per sash(dep. of height and weight of sash)		
Ručka za vrata 102.028	Door handle 102.028		2	
Četvrtka 102.025	Square spindle 102.025		1	
Cilindar (35-75) 122.095	Cylinder (35-75) 122.095		1	
Štitnik cilindra 122.098	Cylinder rosette 122.098		2	
Protuprovalni umetak 141.002	Security pin 141.002		2	
Staklo 44 mm	Glass 44 mm	(Lkr.-194)x(Hpr.-207)	1	
Staklo 44 mm	Glass 44 mm	(Lkr.-194)x/Hkr-(Hpr.+128)/	1	

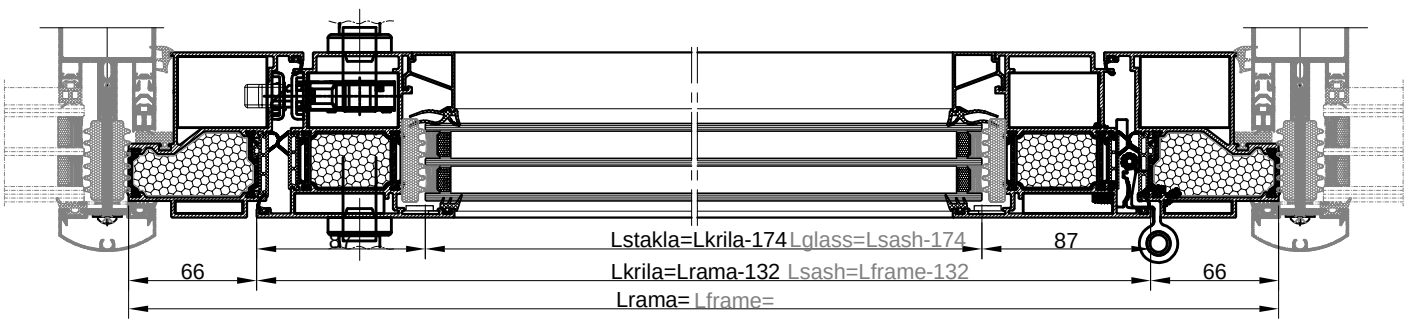


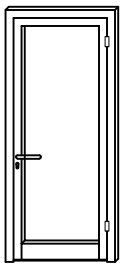




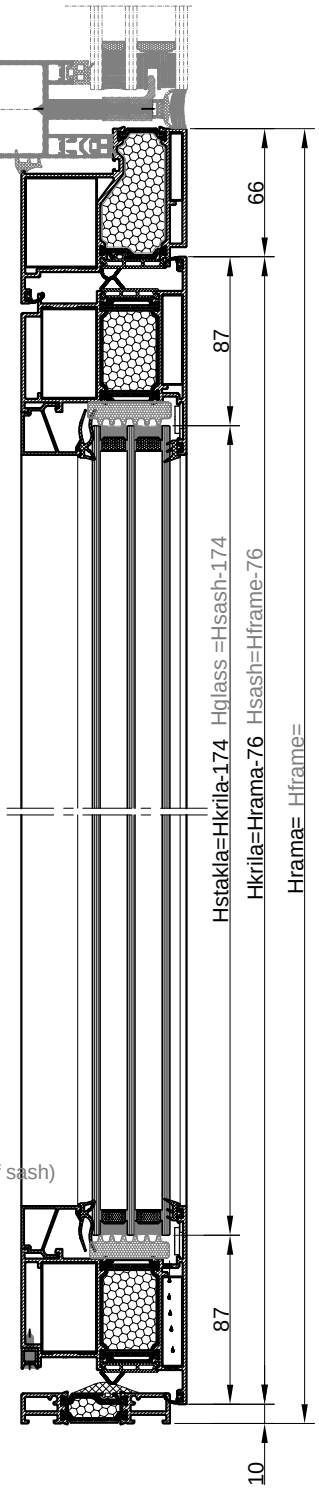
naziv name		mjera dimension	kom. pcs.	pilanje sawing angle
Ram FT-0553F	Frame FT-0553F	L	1	45-45
Ram FT-0553F	Frame FT-0553F	H	2	45-90
Krilo FT-0562F	Sash FT-0562F	L-132	2	45-45
Krilo FT-0562F	Sash FT-0562F	H-76	2	45-45
Prag FT-0585F	Threshold FT-0585F	L-190	1	90-90
Umetak F-1188	Additional profile F-1188	Lkr-58	1	90-90
Staklo lajsna Z40-668	Glazing bead Z40-668	Lkr-160	2	90-90
Staklo lajsna Z40-668	Glazing bead Z40-668	Hkr-204	2	90-90
Kutna spojnica 710.131	Corner bracket 710.131		2	
Kutna spojnica 710.133	Corner bracket 710.133		4	
Kutna spojnica 710.140	Corner bracket 710.140		2	
Kutna spojnica 710.134	Corner bracket 710.134		4	
Kutna spojnica 731.010	Corner bracket 731.010		4	
Kutna spojnica 730.001	Corner bracket 730.001		10	
Centralna brtva rama 338.009	Central gasket-frame 338.009	1L+2H		
Centralna brtva krila 338.010	Central gasket-sash 338.010	2Lkr+2Hkr		
Centralna brtva praga 331.012	Threshold gasket 331.012	L-190	1	90-90
Brtva prema staklu vanjska 328.003	Glazing gasket -external- 328.003	2Lkr+2Hkr		
Brtva prema staklu unutarnja 311.004	Glazing gasket -internal- 311.004	2Lkr+2Hkr		
Brtva na spoju rama i krila 317.002	Rebate gasket 317.002	(1Lrama+2Hrama)+(2Lkr+2Hkr)		
Izolacijski umetak 340.013	Underglass insulator 340.013	2(Lkr-150)+2(Hkr-174)		
Umetak na pragu 373.020	End cap for threshold 373.020	1 par		
Brava G-U Secury s MR2 (35) tri ključanja 122.016	Multipoint lock - G-U Secury MR2 (35) -122.016		1	
Prihvatna pločica 24x6x2 122.065	Striking plate 24x6x2 122.065		2	
Prihvatni lim 24x6 (desni) 122.063	Striking plate 24x6 (right) 122.063		1	
Trodijelna cilindrična šarka 112.012.01 - bijela	Barrel door hinge-3 part 112.012.01 - white	2 ili (3) po krilu ovisno o visini i tež.krila 2 or (3) per sash(dep. of height and weight of sash)		
Ručka za vrata 102.028	Door handle 102.028		2	
Četvrtka 102.025	Square spindle 102.025		1	
Cilindar (35-75) 122.095	Cylinder (35-75) 122.095		1	
Štitnik cilindra 122.098	Cylinder rosette 122.098		2	
Protuprovalni umetak 141.002	Security pin 141.002		2	
Vijak 433.093	Screw 433.093		3	
Staklo 40 mm	Glass 40 mm	(Lkr.-174)x(Hkr.-174)		

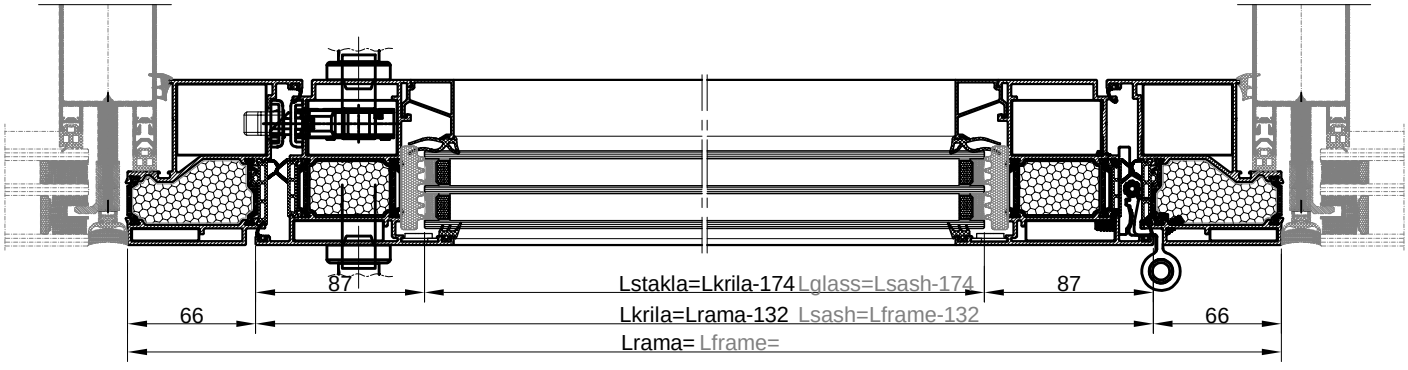


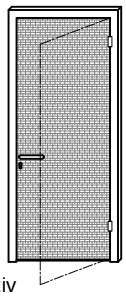




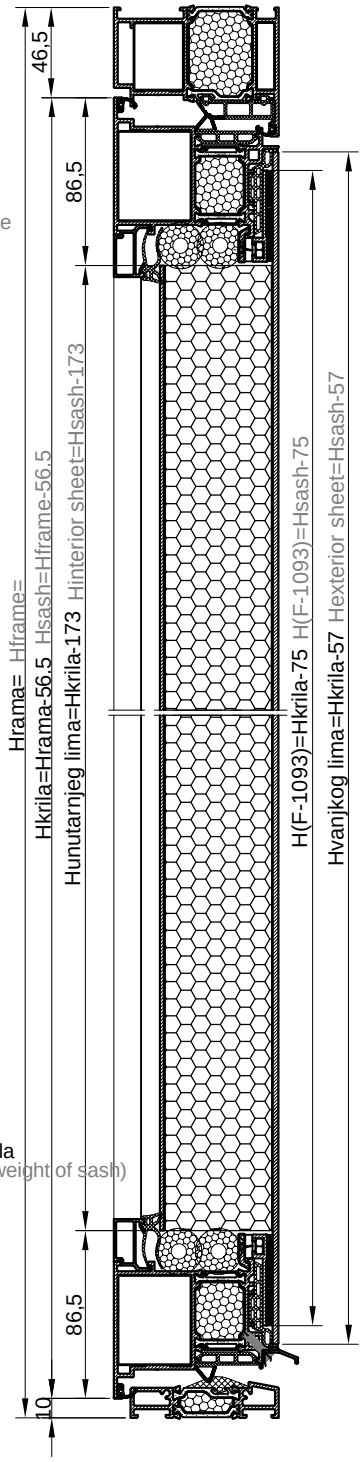
naziv name		mjera dimension	kom. pcs.	pilanje sawing angle
Ram FT-0554F	Frame FT-0554F	L	1	45-45
Ram FT-0554F	Frame FT-0554F	H	2	45-90
Krilo FT-0562F	Sash FT-0562F	L-132	2	45-45
Krilo FT-0562F	Sash FT-0562F	H-76	2	45-45
Prag FT-0585F	Threshold FT-0585F	L-190	1	90-90
Umetak F-1188	Additional profile F-1188	Lkr-58	1	90-90
Staklo lajsna Z40-668	Glazing bead Z40-668	Lkr-160	2	90-90
Staklo lajsna Z40-668	Glazing bead Z40-668	Hkr-204	2	90-90
Kutna spojnica 710.131	Corner bracket 710.131		2	
Kutna spojnica 710.133	Corner bracket 710.133		4	
Kutna spojnica 710.140	Corner bracket 710.140		2	
Kutna spojnica 710.134	Corner bracket 710.134		4	
Kutna spojnica 731.010	Corner bracket 731.010		4	
Kutna spojnica 730.001	Corner bracket 730.001		6	
Centralna brtva rama 338.009	Central gasket-frame 338.009	1L+2H		
Centralna brtva krila 338.010	Central gasket-sash 338.010	2Lkr+2Hkr		
Centralna brtva praga 331.012	Threshold gasket 331.012	L-190	1	90-90
Brtva prema staklu vanjska 328.003	Glazing gasket -external- 328.003	2Lkr+2Hkr		
Brtva prema staklu unutarnja 311.004	Glazing gasket -internal- 311.004	2Lkr+2Hkr		
Brtva na spoju rama i krila 317.002	Rebate gasket 317.002	(1Lrama+2Hrama)+(2Lkr+2Hkr)		
Izolacijski umetak 340.013	Underglass insulator 340.013	2(Lkr-150)+2(Hkr-174)		
Umetak na pragu 373.020	End cap for threshold 373.020	1 par		
Brava G-U Secury s MR2 (35) tri ključanja 122.016	Multipoint lock - G-U Secury MR2 (35) -122.016		1	
Prihvatna pločica 24x6x2 122.065	Striking plate 24x6x2 122.065		2	
Prihvatni lim 24x6 (desni) 122.063	Striking plate 24x6 (right) 122.063		1	
Trodijelna cilindrična šarka 112.012.01 - bijela	Barrel door hinge-3 part 112.012.01 - white	2 ili (3) po krilu ovisno o visini i tež.krila 2 or (3) per sash(dep. of height and weight of sash)		
Ručka za vrata 102.028	Door handle 102.028		2	
Četvrtka 102.025	Square spindle 102.025		1	
Cilindar (35-75) 122.095	Cylinder (35-75) 122.095		1	
Štitnik cilindra 122.098	Cylinder rosette 122.098		2	
Protuprovalni umetak 141.002	Security pin 141.002		2	
Vijak 433.093	Screw 433.093		3	
Staklo 40 mm	Glass 40 mm	(Lkr.-174)x(Hkr.-174)	1	

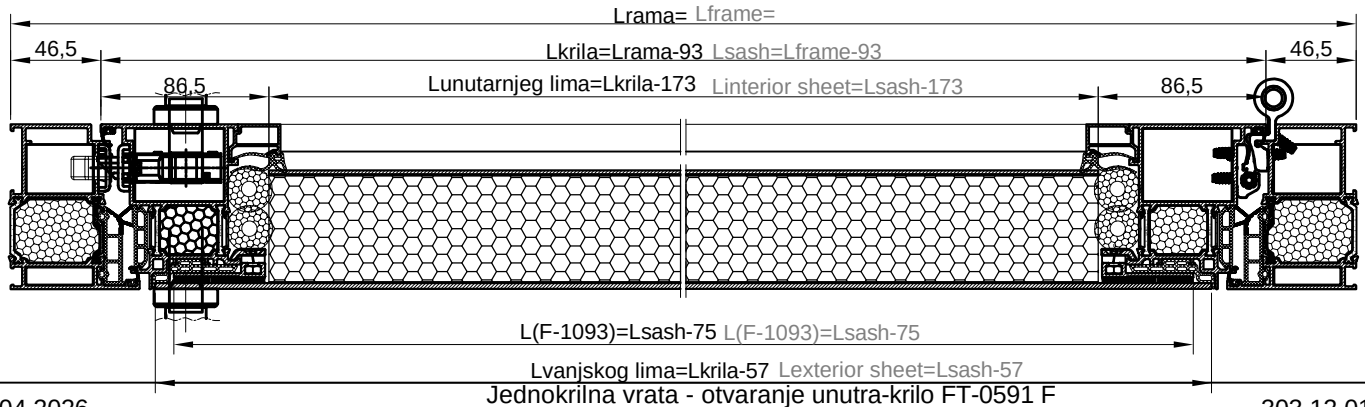


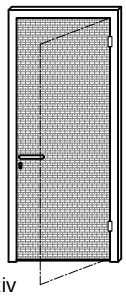




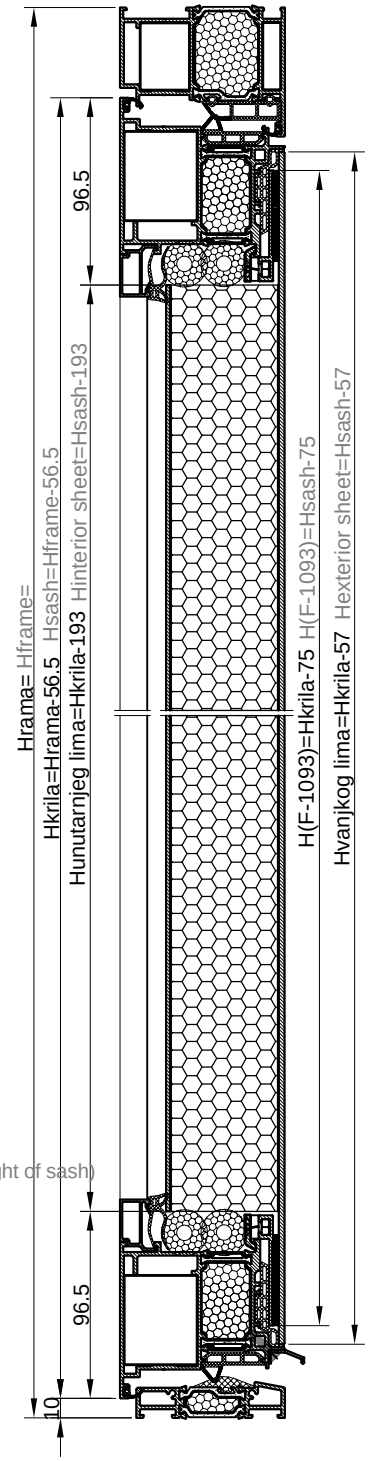
naziv name		mjera dimension	kom. pcs.	pilanje sawing angle
Ram FT-0551F	Frame FT-0551F	L	1	45-45
Ram FT-0551F	Frame FT-0551F	H	2	45-90
Krilo FT-0591F	Sash FT-0591F	L-93	2	45-45
Krilo FT-0591F	Sash FT-0591F	H-56.5	2	45-45
Prag FT-0584F	Threshold FT-0584F	L-164	1	90-90
Okapnica F-0970	Drip cap profile F-0970	Lkr-58	1	90-90
Staklo lajsna Z40-665	Glazing bead Z40-665	Lkr-141	2	90-90
Staklo lajsna Z40-665	Glazing bead Z40-665	Hkr-185	2	90-90
Al profil F-1093	Al profile F-1093	Lkr-76	2	45-45
Al profil F-1093	Al profile F-1093	Hkr-76	2	45-45
Kutna spojnica 710.143	Corner bracket 710.143		2	
Kutna spojnica 710.141	Corner bracket 710.141		2	
Kutna spojnica 710.136	Corner bracket 710.136		4	
Kutna spojnica 710.015	Corner bracket 710.015		4	
Kutna spojnica 710.203	Corner bracket 710.203		4	
Kutna spojnica 730.001	Corner bracket 730.001		6	
Kopča 141.001	Panel clamp 141.001		(2Lkr+2Hkr)/250	
Centralna brtva rama 338.004	Central gasket-frame 338.004	1L+2H		
Centralna brtva krila 338.006	Central gasket-sash 338.006	2Lkr+2Hkr		
Brtva na spoju rama i krila 317.002	Rebate gasket 317.002	3Lkr+4Hkr		
Brtva 348.004	Gasket 348.004	2(Lkr-53)+2(Hkr-53)		
Brtva prema panelu unut. 311.005	Panel gasket-internal 311.005	2Lkr+2Hkr		
Brtva praga 331.012	Threshold gasket 331.012	L-164	1	90-90
Čep okapnice F-0970 375.001	End cap for F-0970 375.001		1 par	
Umetak na pragu 363.103	End cap for threshold 363.103		1 par	
Brava G-U Secury s MR2 (35) tri ključanja 122.016	Multipoint lock - G-U Secury MR2 (35) -122.016		1	
Prihvatna pločica 24x6x2 122.065	Striking plate 24x6x2 122.065		2	
Prihvatni lim 24x6 (lijevi) 122.064	Striking plate 24x6 (left) 122.064		1	
Trodijelna cilindrična šarka 112.011.01 - bijela	Barrel door hinge-3 part 112.011.01 - white	2 ili (3) po krilu ovisno o visini i tež.krila 2 or (3) per sash(dep. of height and weight of sash)		
Ručka za vrata 102.028	Door handle 102.028		2	
Četvrtka 102.025	Square spindle 102.025		1	
Cilindar (35-75) 122.095	Cylinder (35-75) 122.095		1	
Štitnik cilindra 122.098	Cylinder rosette 122.098		2	
Protuprovalni umetak 141.002	Security pin 141.002		2	
Vijak 433.094	Screw 433.094		3	
Izolacijski umetak Ø25 340.035	Underpanel insulator Ø25 340.035	4(Lkr-173)+4(Hkr-131)		
Vanjski lim panela 3 mm	Exterior sheet 3 mm	(Lkr.-57)x(Hkr.-57)	1	
Unutarnji lim panela 2 mm	Interior sheet 2 mm	(Lkr.-173)x(Hkr.-173)	1	
Stirodur za panel (60 mm)	Stirodur za panel (60 mm)	(Lkr.-173)x(Hkr.-173)	1	

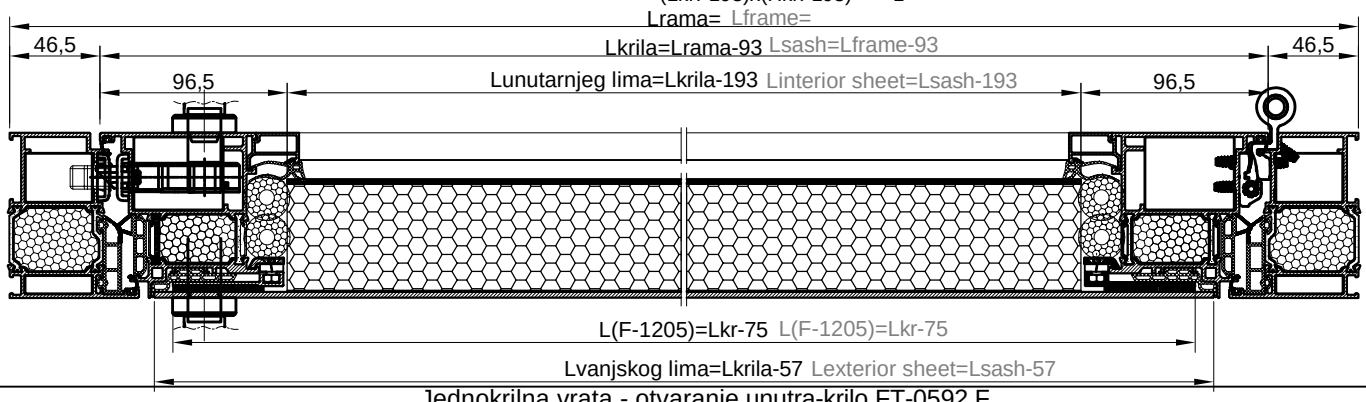


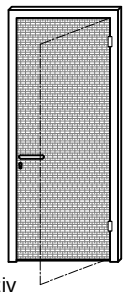




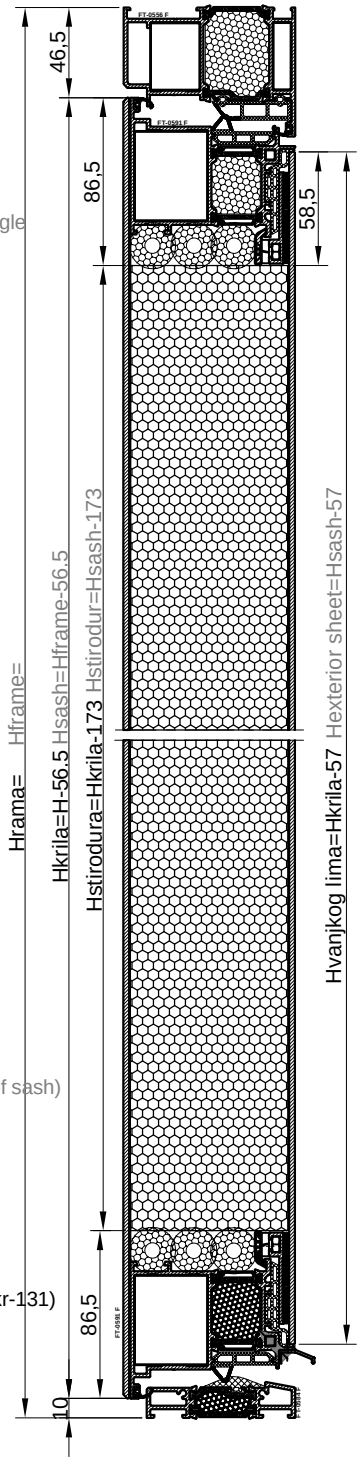
naziv name		mjera dimension	kom. pcs.	pilanje sawing angle
Ram FT-0551F	Frame FT-0551F	L	1	45-45
Ram FT-0551F	Frame FT-0551F	H	2	45-90
Krilo FT-0592F	Sash FT-0592F	L-93	2	45-45
Krilo FT-0592F	Sash FT-0592F	H-56.5	2	45-45
Prag FT-0584F	Threshold FT-0584F	L-164	1	90-90
Okapnica F-0970	Drip cap profile F-0970	Lkr-58	1	90-90
Staklo lajsna Z40-665	Glazing bead Z40-665	Lkr-161	2	90-90
Staklo lajsna Z40-665	Glazing bead Z40-665	Hkr-205	2	90-90
Al profil F-1205	Al profile F-1205	Lkr-76	2	45-45
Al profil F-1205	Al profile F-1205	Hkr-76	2	45-45
Kutna spojnica 710.143	Corner bracket 710.143		2	
Kutna spojnica 710.141	Corner bracket 710.141		2	
Kutna spojnica 710.136	Corner bracket 710.136		4	
Kutna spojnica 710.015	Corner bracket 710.015		4	
Kutna spojnica 710.203	Corner bracket 710.203		4	
Kutna spojnica 730.001	Corner bracket 730.001		6	
Kopča 141.001	Panel clamp 141.001		(2Lkr+2Hkr)/250	
Centralna brtva rama 338.004	Central gasket-frame 338.004	1L+2H		
Centralna brtva krila 338.006	Central gasket-sash 338.006	2Lkr+2Hkr		
Brtva na spoju rama i krila 317.002	Rebate gasket 317.002	3Lkr+4Hkr		
Brtva 348.004	Gasket 348.004	2(Lkr-53)+2(Hkr-53)		
Brtva prema panelu unut. 311.005	Panel gasket-internal 311.005	2Lkr+2Hkr		
Brtva praga 331.012	Threshold gasket 331.012	L-164	1	90-90
Čep okapnice F-0970 375.001	End cap for F-0970 375.001		1 par	
Umetak na pragu 363.103	End cap for threshold 363.103		1 par	
Brava G-U Secury s MR2 (45) tri ključanja 122.015	Multipoint lock - G-U Secury MR2 (45) -122.015		1	
Prihvatna pločica 24x6x2 122.065	Striking plate 24x6x2 122.065		2	
Prihvatni lim 24x6 (lijevi) 122.064	Striking plate 24x6 (left) 122.064		1	
Trodijelna cilindrična šarka 112.011.01 - bijela	Barrel door hinge-3 part 112.011.01 - white	2 ili (3) po krilu ovisno o visini i tež.krila 2 or (3) per sash(dep. of height and weight of sash)		
Ručka za vrata 102.028	Door handle 102.028		2	
Četvrtka 102.025	Square spindle 102.025		1	
Cilindar (35-75) 122.095	Cylinder (35-75) 122.095		1	
Štitnik cilindra 122.098	Cylinder rosette 122.098		2	
Protuprovalni umetak 141.002	Security pin 141.002		2	
Vijak 433.094	Screw 433.094		3	
Izolacijski umetak Ø25 340.035	Underpanel insulator Ø25 340.035		4(Lkr-192)+4(Hkr-151)	
Vanjski lim panela 3 mm	Exterior sheet 3 mm	(Lkr.-57)x(Hkr.-57)	1	
Unutarnji lim panela 2 mm	Interior sheet 2 mm	(Lkr.-193)x(Hkr.-193)	1	
Stirodur za panel (60 mm)	Stirodur za panel (60 mm)	(Lkr.-193)x(Hkr.-193)	1	

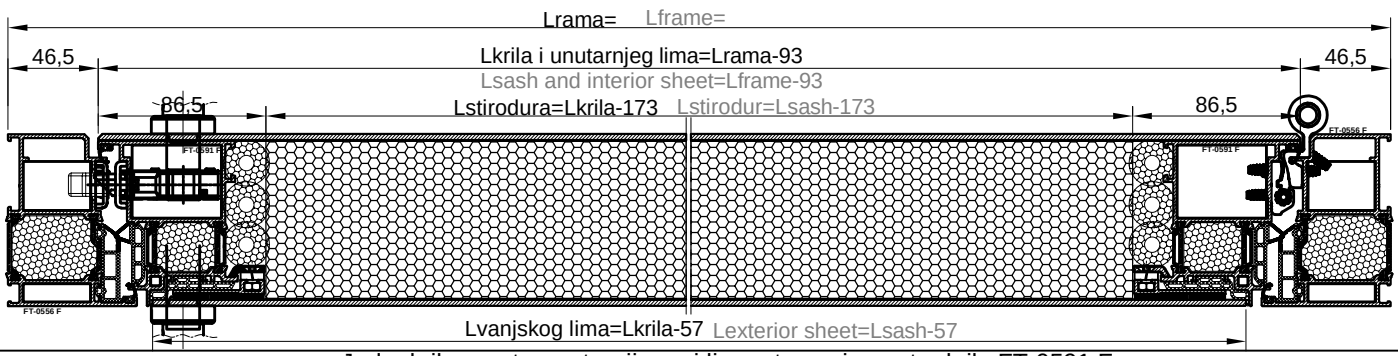


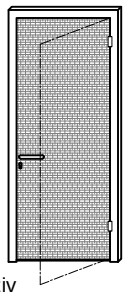




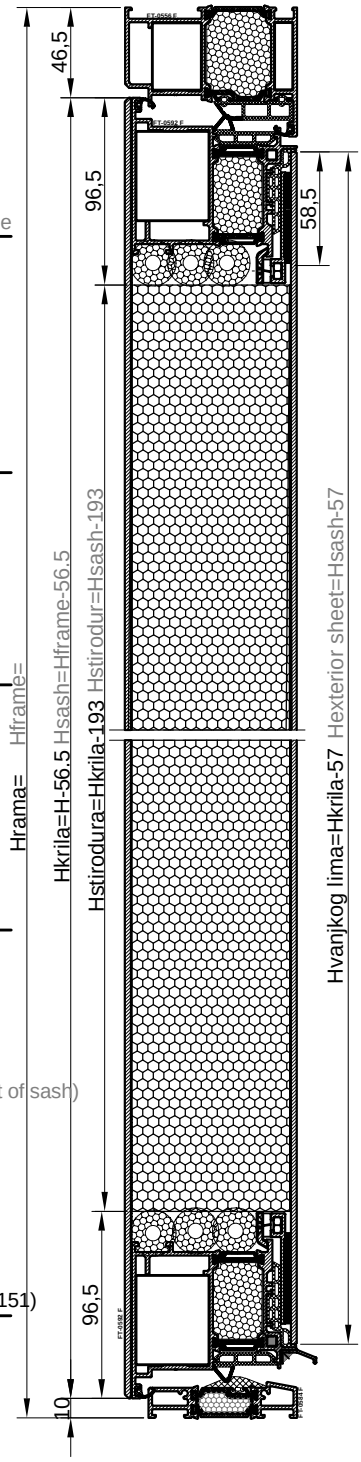
naziv name		mjera dimension	kom. pcs.	pilanje sawing angle
Ram FT-0556F	Frame FT-0556F	L	1	45-45
Ram FT-0556F	Frame FT-0556F	H	2	45-90
Krilo FT-0591F	Sash FT-0591F	L-93	2	45-45
Krilo FT-0591F	Sash FT-0591F	H-56.5	2	45-45
Prag FT-0584F	Threshold FT-0584F	L-164	1	90-90
Okapnica F-0970	Drip cap profile F-0970	Lkr-58	1	90-90
Al profil F-1093	Al profile F-1093	Lkr-76	2	45-45
Al profil F-1093	Al profile F-1093	Hkr-76	2	45-45
Kutna spojnica 710.143	Corner bracket 710.143		2	
Kutna spojnica 710.141	Corner bracket 710.141		2	
Kutna spojnica 710.136	Corner bracket 710.136		4	
Kutna spojnica 710.015	Corner bracket 710.015		4	
Kutna spojnica 710.203	Corner bracket 710.203		4	
Kutna spojnica 730.001	Corner bracket 730.001		6	
Kopča 141.001	Panel clamp 141.001		(2Lkr+2Hkr)/250	
Centralna brtva rama 338.004	Central gasket-frame 338.004	1L+2H		
Centralna brtva krila 338.006	Central gasket-sash 338.006	2Lkr+2Hkr		
Brtva na spoju rama i krila 317.002	Rebate gasket 317.002	3Lkr+4Hkr		
Brtva 348.004	Gasket 348.004	2(Lkr-53)+2(Hkr-53)		
Brtva praga 331.012	Threshold gasket 331.012	L-164	1	90-90
Čep okapnice F-0970 375.001	End cap for F-0970 375.001		1 par	
Umetak na pragu 363.103	End cap for threshold 363.103		1 par	
Brava G-U Secury s MR2 (35) tri ključanja 122.016	Multipoint lock - G-U Secury MR2 (35) -122.016		1	
Prihvatna pločica 24x6x2 122.065	Striking plate 24x6x2 122.065		2	
Prihvatni lim 24x6 (lijevi) 122.064	Striking plate 24x6 (left) 122.064		1	
Trodijelna cilindrična šarka 112.011.01 - bijela	Barrel door hinge-3 part 112.011.01 - white	2 ili (3) po krilu ovisno o visini i tež.krila 2 or (3) per sash(dep. of height and weight of sash)		
Ručka za vrata 102.028	Door handle 102.028		2	
Četvrtka 102.025	Square spindle 102.025		1	
Cilindar (35-75) 122.095	Cylinder (35-75) 122.095		1	
Štitnik cilindra 122.098	Cylinder rosette 122.098		2	
Protuprovalni umetak 141.002	Security pin 141.002		2	
Vijak 433.094	Screw 433.094		3	
Izolacijski umetak Ø25 340.035	Underpanel insulator Ø25 340.035		6(Lkr-173)+6(Hkr-131)	
Vanjski lim panela 3 mm	Exterior sheet 3 mm	(Lkr.-57)x(Hkr.-57)	1	
Unutarnji lim panela 3 mm	Interior sheet 3 mm	LkrxHkr	1	
Stirodur (ispuna panela 81.4 mm)	Stirodur (ispuna panela 81.4 mm)	(Lkrila-173)x(Hkrila-173) (Lkrila-173)x(Hkrila-173)	1	

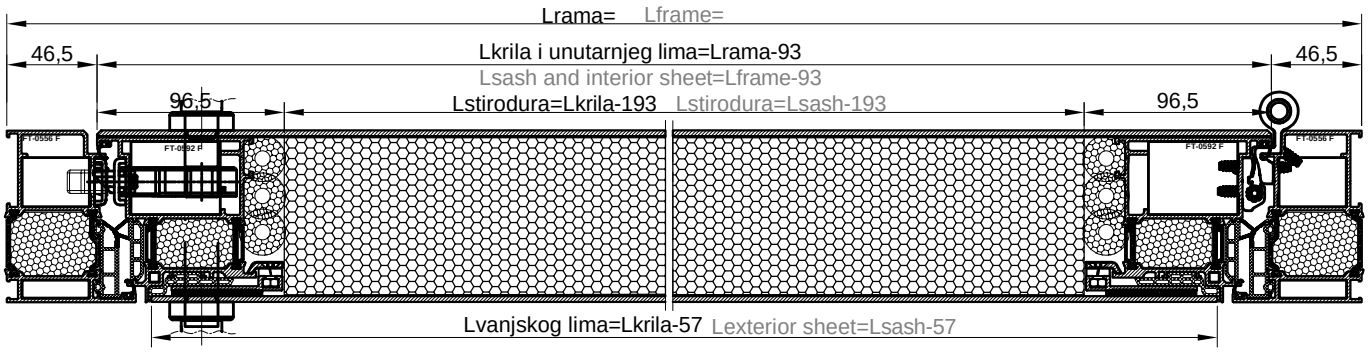


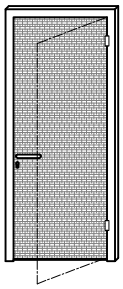




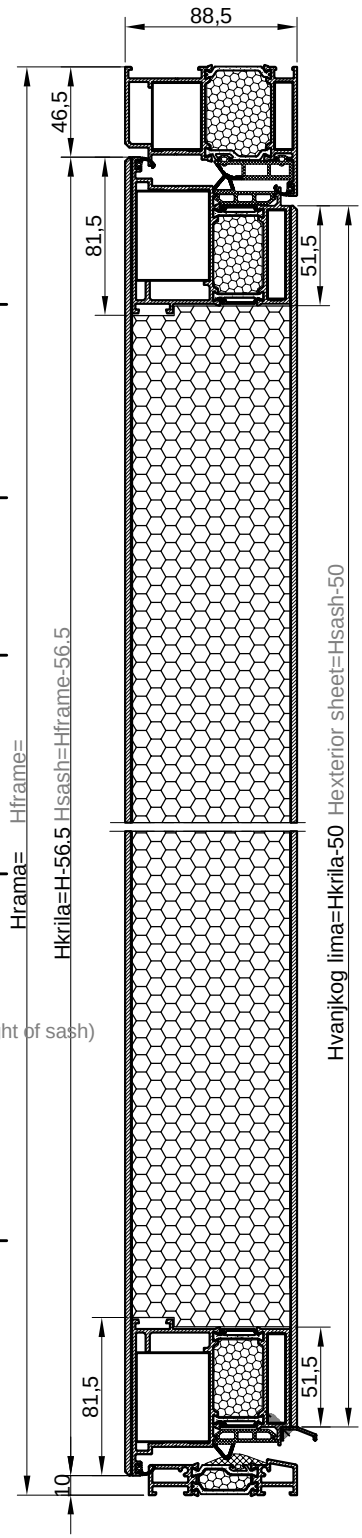
naziv name		mjera dimension	kom. pcs.	pilanje sawing angle
Ram FT-0556F	Frame FT-0556F	L	1	45-45
Ram FT-0556F	Frame FT-0556F	H	2	45-90
Krilo FT-0592F	Sash FT-0591F	L-93	2	45-45
Krilo FT-0592F	Sash FT-0591F	H-56.5	2	45-45
Prag FT-0584F	Threshold FT-0584F	L-164	1	90-90
Okapnica F-0970	Drip cap profile F-0970	Lkr-58	1	90-90
Al profil F-1205	Al profile F-1205	Lkr-76	2	45-45
Al profil F-1205	Al profile F-1205	Hkr-76	2	45-45
Kutna spojnica 710.143	Corner bracket 710.143		2	
Kutna spojnica 710.141	Corner bracket 710.141		2	
Kutna spojnica 710.136	Corner bracket 710.136		4	
Kutna spojnica 710.015	Corner bracket 710.015		4	
Kutna spojnica 710.203	Corner bracket 710.203		4	
Kutna spojnica 730.001	Corner bracket 730.001		6	
Kopča 141.001	Panel clamp 141.001		(2Lkr+2Hkr)/250	
Centralna brtva rama 338.004	Central gasket-frame 338.004	1L+2H		
Centralna brtva krila 338.006	Central gasket-sash 338.006	2Lkr+2Hkr		
Brtva na spoju rama i krila 317.002	Rebate gasket 317.002	3Lkr+4Hkr		
Brtva 348.004	Gasket 348.004	2(Lkr-53)+2(Hkr-53)		
Brtva praga 331.012	Threshold gasket 331.012	L-164	1	90-90
Čep okapnice F-0970 375.001	End cap for F-0970 375.001		1 par	
Umetak na pragu 363.103	End cap for threshold 363.103		1 par	
Brava G-U Secury s MR2 (45) tri ključanja 122.015	Multipoint lock - G-U Secury MR2 (45) -122.015		1	
Prihvatna pločica 24x6x2 122.065	Striking plate 24x6x2 122.065		2	
Prihvatni lim 24x6 (lijevi) 122.064	Striking plate 24x6 (left) 122.064		1	
Trodijelna cilindrična šarka 112.011.01 - bijela	Barrel door hinge-3 part 112.011.01 - white	2 ili (3) po krilu ovisno o visini i tež.krila 2 or (3) per sash(dep. of height and weight of sash)		
Ručka za vrata 102.028	Door handle 102.028		2	
Četvrtka 102.025	Square spindle 102.025		1	
Cilindar (35-75) 122.095	Cylinder (35-75) 122.095		1	
Štitnik cilindra 122.098	Cylinder rosette 122.098		2	
Protuprovalni umetak 141.002	Security pin 141.002		2	
Vijak 433.094	Screw 433.094		3	
Izolacijski umetak Ø25 340.035	Underpanel insulator Ø25 340.035		6(Lkr-193)+6(Hkr-151)	
Vanjski lim panela 3 mm	Exterior sheet 3 mm	(Lkr.-57)x(Hkr.-57)	1	
Unutarnji lim panela 3 mm	Interior sheet 3 mm	LkrxHkr	1	
Stirodur (ispuna panela 81.4 mm)	Stirodur (panel 81.4 mm)	(Lkrila-193)x(Hkrila-193) (Lsash-193)x(Hsash-193)	1	

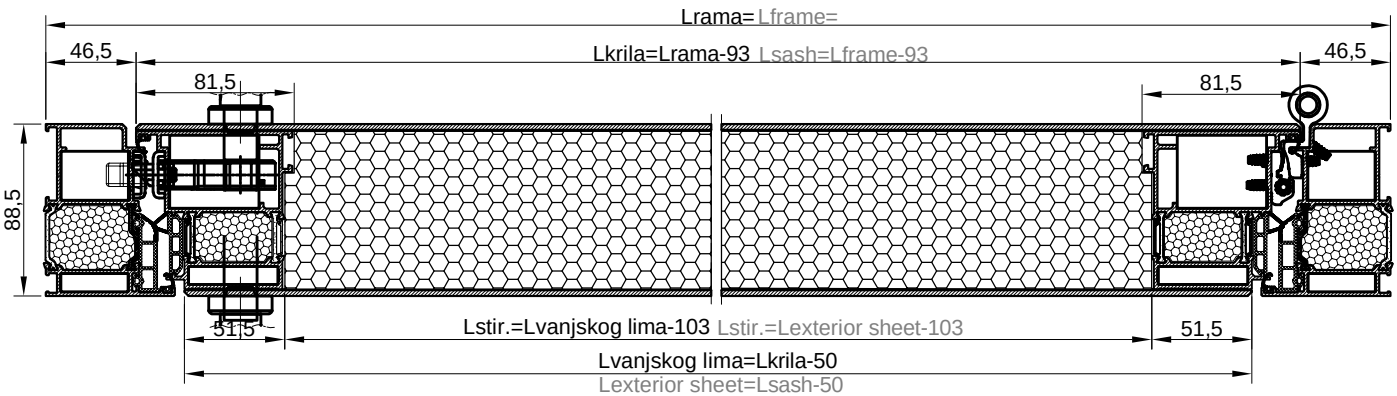


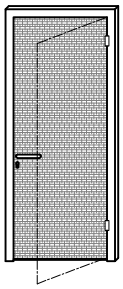




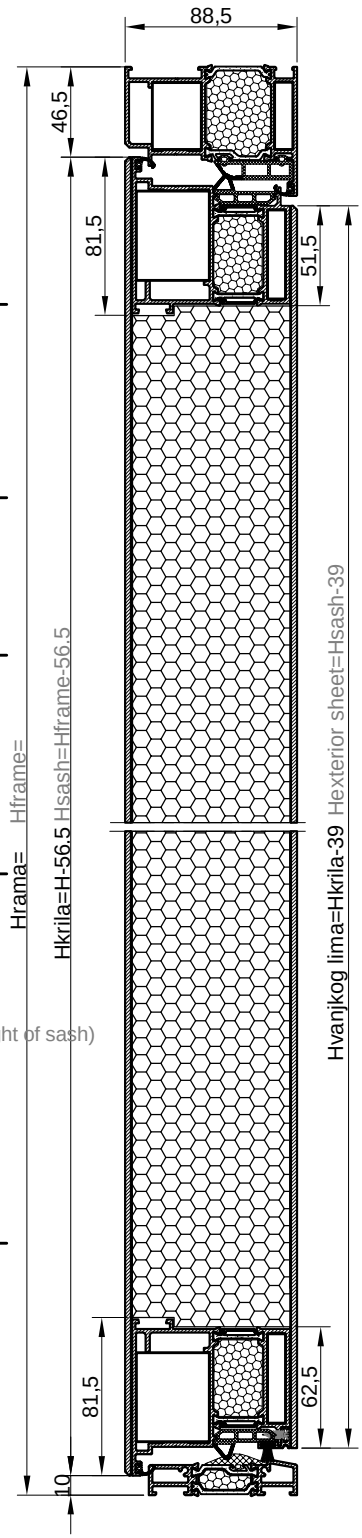
naziv name		mjera dimension	kom. pcs.	pilanje sawing angle
Ram FT-0556F	Frame FT-0556F	L	1	45-45
Ram FT-0556F	Frame FT-0556F	H	2	45-90
Krilo FT-0593F	Sash FT-0593F	L-93	2	45-45
Krilo FT-0593F	Sash FT-0593F	H-56.5	2	45-45
Prag FT-0584F	Threshold FT-0584F	L-164	1	90-90
Okapnica F-0970	Drip cap profile F-0970	Lkr-54	1	90-90
Kutna spojnica 710.143	Corner bracket 710.143		2	
Kutna spojnica 710.141	Corner bracket 710.141		2	
Kutna spojnica 710.136	Corner bracket 710.136		4	
Kutna spojnica 710.169	Corner bracket 710.169		4	
Kutna spojnica 730.001	Corner bracket 730.001		6	
Centralna brtva rama 338.004	Central gasket-frame 338.004	1L+2H		
Centralna brtva krila 338.006	Central gasket-sash 338.006	2Lkr+2Hkr		
Brtva na spoju rama i krila 317.002	Rebate gasket 317.002	3Lkr+4Hkr		
Brtva praga 331.012	Threshold gasket 331.012	L-164	1	90-90
Čep okapnice F-0970 375.001	End cap for F-0970 375.001		1 par	
Umetak na pragu 363.103	End cap for threshold 363.103		1 par	
Brava G-U Secury s MR2 (45) tri ključanja 122.015	Multipoint lock - G-U Secury MR2 (45) -122.015		1	
Prihvatna pločica 24x6x2 122.065	Striking plate 24x6x2 122.065		2	
Prihvatni lim 24x6 (lijevi) 122.064	Striking plate 24x6 (left) 122.064		1	
Trodijelna cilindrična šarka 112.011.01 - bijela	Barrel door hinge-3 part 112.011.01 - white	2 ili (3) po krilu ovisno o visini i tež.krila 2 or (3) per sash(dep. of height and weight of sash)		
Ručka za vrata 102.028	Door handle 102.028		2	
Četvrtka 102.025	Square spindle 102.025		1	
Cilindar (35-75) 122.095	Cylinder (35-75) 122.095		1	
Štitnik cilindra 122.098	Cylinder rosette 122.098		2	
Protuprovalni umetak 141.002	Security pin 141.002		2	
Vijak 433.094	Screw 433.094		3	
Vanjski lim panela 3 mm	Exterior sheet 3 mm	(Lkr.-50)x(Hkr.-50)	1	
Unutarnji lim panela 3 mm	Interior sheet 3 mm	LkrxHkr	1	
Stirodur (ispuna panela 81.4 mm)	Stirodur (panel 81.4 mm)	(Lvanj.lima-103)x(Hvanj.lima-103) (Lext.sheet-103)x(Hext.sheet-103)	1	

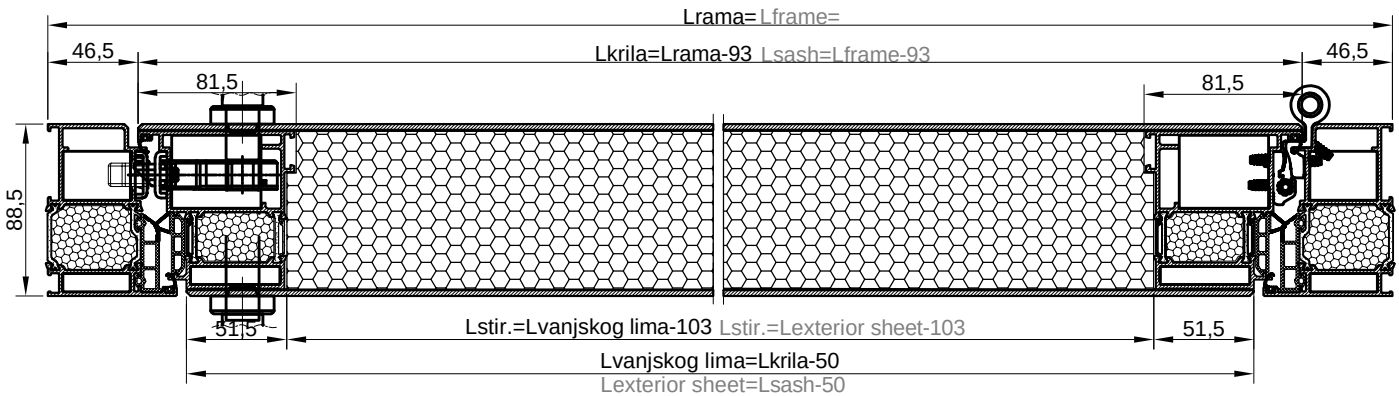


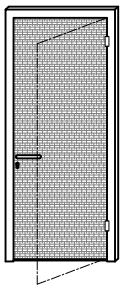




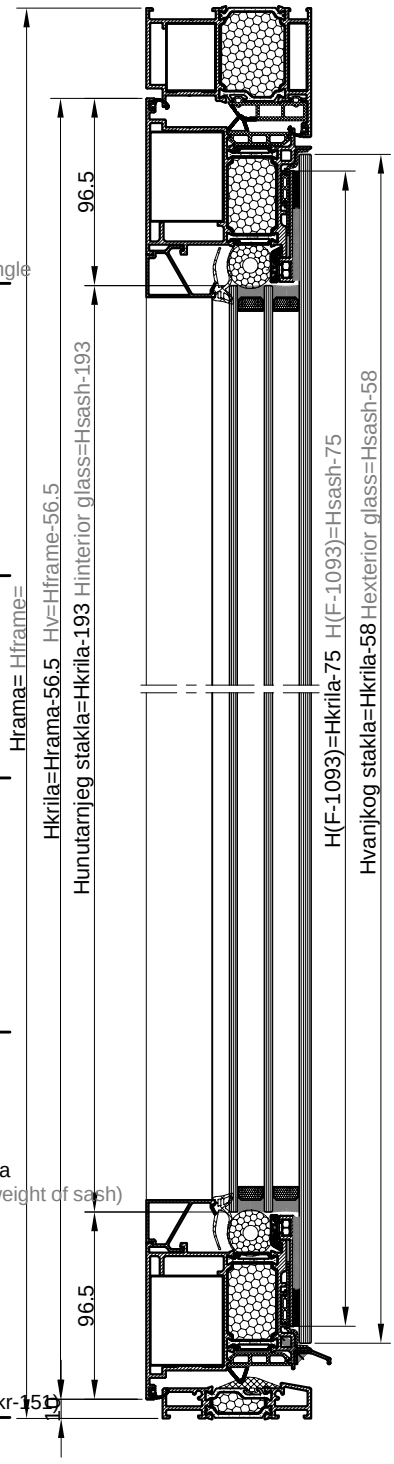
naziv name		mjera dimension	kom. pcs.	pilanje sawing angle
Ram FT-0556F	Frame FT-0556F	L	1	45-45
Ram FT-0556F	Frame FT-0556F	H	2	45-90
Krilo FT-0593F	Sash FT-0593F	L-93	2	45-45
Krilo FT-0593F	Sash FT-0593F	H-56.5	2	45-45
Prag FT-0584F	Threshold FT-0584F	L-164	1	90-90
Okapnica F-1596	Drip cap profile F-1596	Lkr-54	1	90-90
Kutna spojnica 710.143	Corner bracket 710.143		2	
Kutna spojnica 710.141	Corner bracket 710.141		2	
Kutna spojnica 710.136	Corner bracket 710.136		4	
Kutna spojnica 710.169	Corner bracket 710.169		4	
Kutna spojnica 730.001	Corner bracket 730.001		6	
Centralna brtva rama 338.004	Central gasket-frame 338.004	1L+2H		
Centralna brtva krila 338.006	Central gasket-sash 338.006	2Lkr+2Hkr		
Brtva na spoju rama i krila 317.002	Rebate gasket 317.002	3Lkr+4Hkr		
Brtva praga 331.012	Threshold gasket 331.012	L-164	1	90-90
Čep okapnice F-1596 373.057	End cap for F-1596 373.057		1 par	
Umetak na pragu 363.103	End cap for threshold 363.103		1 par	
Brava G-U Secury s MR2 (45) tri ključanja 122.015	Multipoint lock - G-U Secury MR2 (45) -122.015		1	
Prihvatna pločica 24x6x2 122.065	Striking plate 24x6x2 122.065		2	
Prihvatni lim 24x6 (lijevi) 122.064	Striking plate 24x6 (left) 122.064		1	
Trodijelna cilindrična šarka 112.011.01 - bijela	Barrel door hinge-3 part 112.011.01 - white	2 ili (3) po krilu ovisno o visini i tež.krila 2 or (3) per sash(dep. of height and weight of sash)		
Ručka za vrata 102.028	Door handle 102.028		2	
Četvrtka 102.025	Square spindle 102.025		1	
Cilindar (35-75) 122.095	Cylinder (35-75) 122.095		1	
Štitnik cilindra 122.098	Cylinder rosette 122.098		2	
Protuprovalni umetak 141.002	Security pin 141.002		2	
Vijak 433.002	Screw 433.094		3	
Vanjski lim panela 3 mm	Exterior sheet 3 mm	(Lkr.-50)x(Hkr.-39)	1	
Unutarnji lim panela 3 mm	Interior sheet 3 mm	LkrxHkr	1	
Stirodur (ispuna panela 81.4 mm)	Stirodur (panel 81.4 mm)	(Lvanj.lima-103)x(Hvanj.lima-114) (Lext.sheet-103)x(Hint.sheet-114)	1	

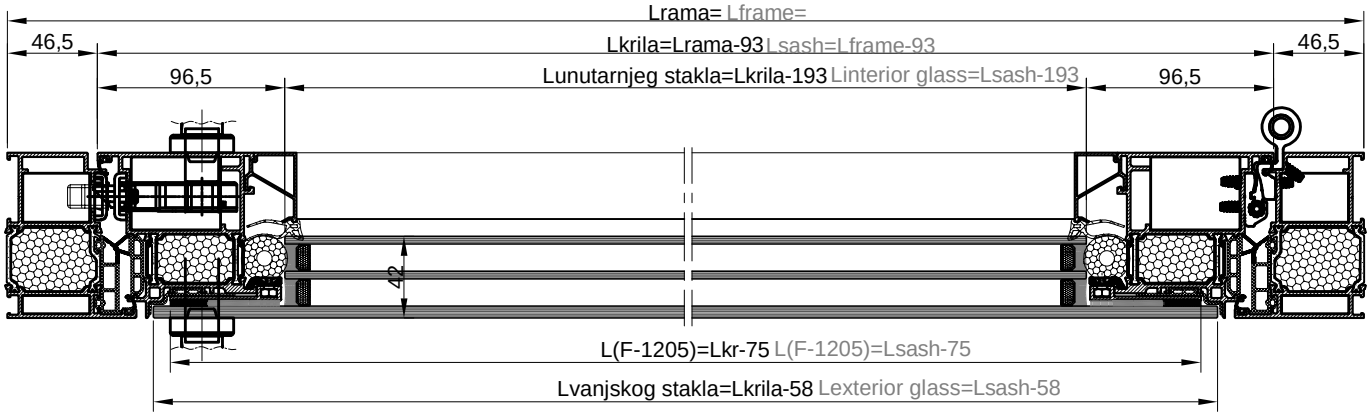




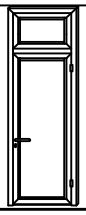


naziv name		mjera dimension	kom. pcs.	pilanje sawing angle
Ram FT-0551F	Frame FT-0551F	L	1	45-45
Ram FT-0551F	Frame FT-0551F	H	2	45-90
Krilo FT-0592F	Sash FT-0592F	L-93	2	45-45
Krilo FT-0592F	Sash FT-0592F	H-56.5	2	45-45
Prag FT-0584F	Threshold FT-0584F	L-164	1	90-90
Okapnica F-0970	Drip cap profile F-0970	Lkr-58	1	90-90
Staklo lajsna Z40-669	Glazing bead Z40-669	Lkr-161	2	90-90
Staklo lajsna Z40-669	Glazing bead Z40-669	Hkr-205	2	90-90
Al profil F-1205	Al profile F-1205	Lkr-75	2	45-45
Al profil F-1205	Al profile F-1205	Hkr-75	2	45-45
Kutna spojnica 710.143	Corner bracket 710.143		2	
Kutna spojnica 710.141	Corner bracket 710.141		2	
Kutna spojnica 710.136	Corner bracket 710.136		4	
Kutna spojnica 710.015	Corner bracket 710.015		4	
Kutna spojnica 710.203	Corner bracket 710.203		4	
Kutna spojnica 730.001	Corner bracket 730.001		6	
Kopča 141.001	Panel clamp 141.001		(2Lkr+2Hkr)/250	
Centralna brtva rama 338.004	Central gasket-frame 338.004	1L+2H		
Centralna brtva krila 338.006	Central gasket-sash 338.006	2Lkr+2Hkr		
Brtva na spoju rama i krila 317.002	Rebate gasket 317.002	3Lkr+4Hkr		
Brtva 348.003	Gasket 348.003	2(Lkr-53)+2(Hkr-53)		
Brtva prema staklu unutarnja 311.005	Glazing gasket -internal- 311.005	2Lkr+2Hkr		
Brtva praga 331.012	Threshold gasket 331.012	L-164	1	90-90
Čep okapnice F-0970 375.001	End cap for F-0970 375.001		1 par	
Umetak na pragu 363.103	End cap for threshold 363.103		1 par	
Brava G-U Secury s MR2 (45) tri ključanja 122.015	Multipoint lock - G-U Secury MR2 (45) -122.015		1	
Prihvatna pločica 24x6x2 122.065	Striking plate 24x6x2 122.065		2	
Prihvatni lim 24x6 (lijevi) 122.064	Striking plate 24x6 (left) 122.064		1	
Trodijelna cilindrična šarka 112.011.01 - bijela	Barrel door hinge-3 part 112.011.01 - white	2 ili (3) po krilu ovisno o visini i tež.krila 2 or (3) per sash(dep. of height and weight of sash)		
Ručka za vrata 102.028	Door handle 102.028		2	
Četvrtka 102.025	Square spindle 102.025		1	
Cilindar (35-75) 122.095	Cylinder (35-75) 122.095		1	
Štitnik cilindra 122.098	Cylinder rosette 122.098		2	
Protuprovalni umetak 141.002	Security pin 141.002		2	
Vijak 433.094	Screw 433.094		3	
Izolacijski umetak Ø25 340.035	Underglass insulator Ø25 340.035		4(Lkr-192)+4(Hkr-151)	
Vanjsko staklo	Exterior glass	(Lkr.-58)x(Hkr.-58)	1	
Unutarnje staklo	Interior glass	(Lkr.-193)x(Hkr.-193)	1	

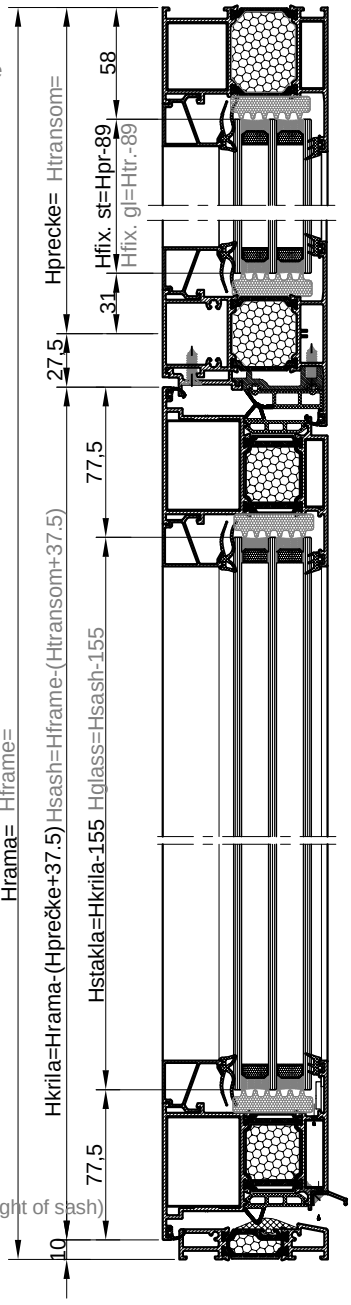


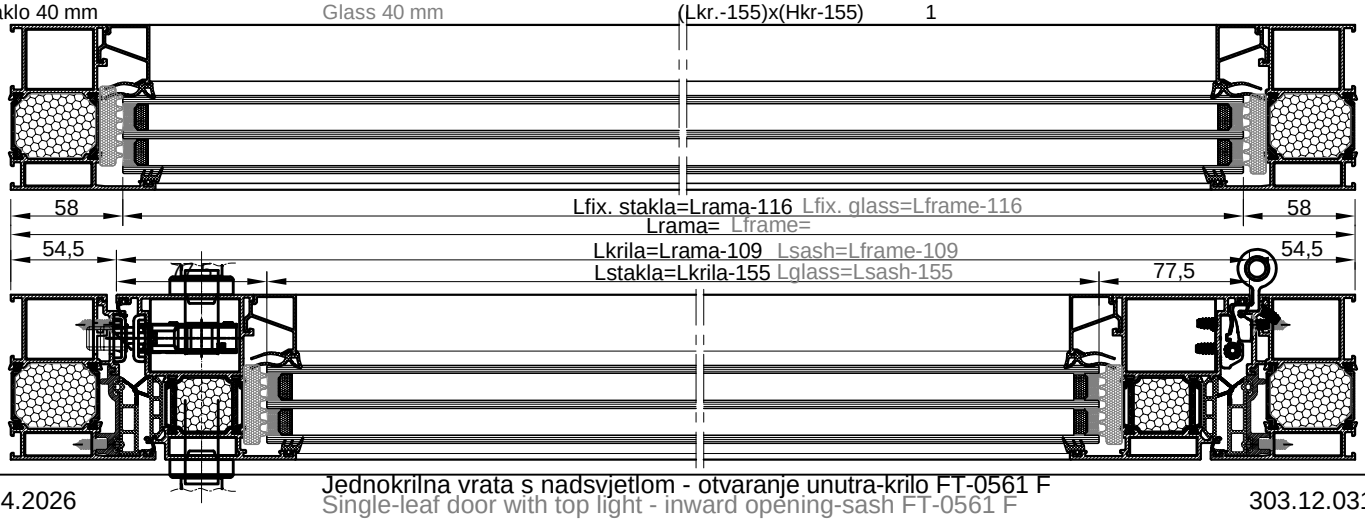


Jednokrilna vrata s nadsvjetlom
Single-leaf door with top light

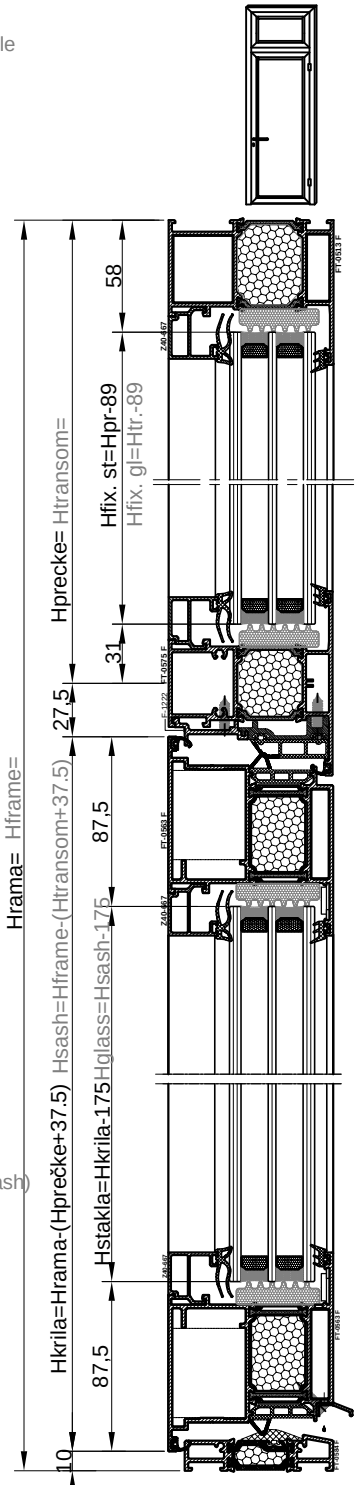


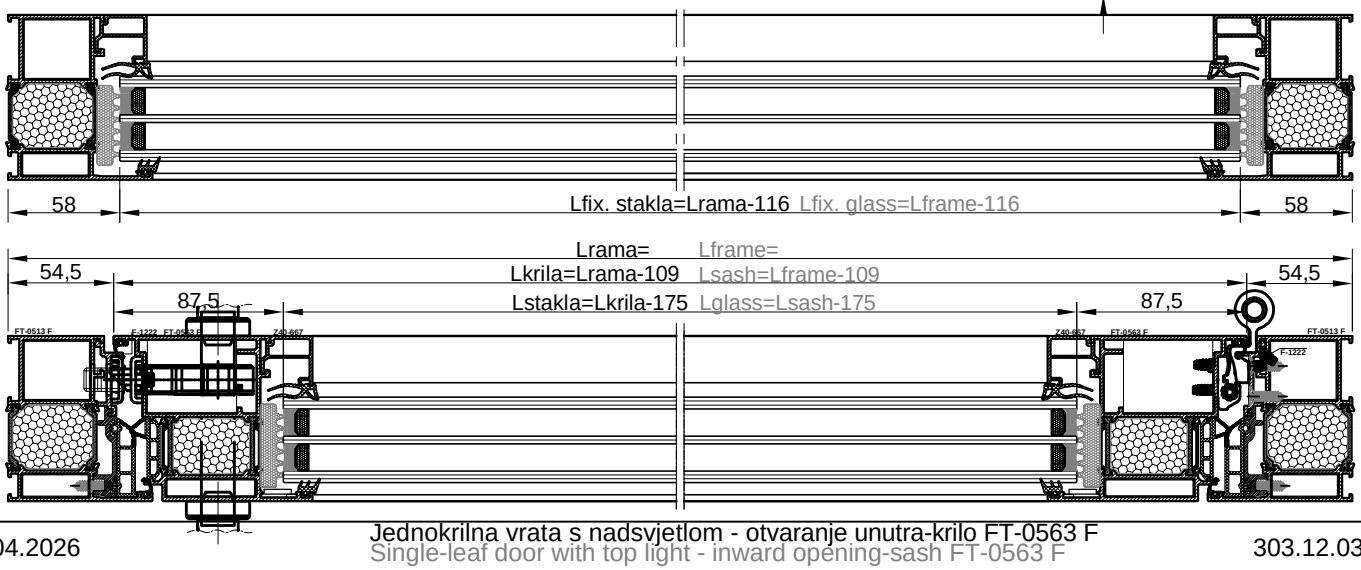
naziv name		mjera dimension	kom. pcs.	pilanje sawing angle
Ram FT-0513F	Frame FT-0513F	L	1	45-45
Ram FT-0513F	Frame FT-0513F	H	2	45-90
Krilo FT-0561F	Sash FT-0561F	L-109	2	45-45
Krilo FT-0561F	Sash FT-0561F	H-(Hpr+37.5)	2	45-45
Prag FT-0584F	Threshold FT-0584F	L-180	1	90-90
Okapnica F-0970	Drip cap profile F-0970	Lkr-58	1	90-90
Staklo lajsna Z40-668	Glazing bead Z40-668	L-99	2	90-90
Staklo lajsna Z40-668	Glazing bead Z40-668	Lkr-141	2	90-90
Staklo lajsna Z40-668	Glazing bead Z40-668	Hpr.-116	2	90-90
Staklo lajsna Z40-668	Glazing bead Z40-668	H-(Hpr.+222.5)	2	90-90
Prečka FT-0575F	Transom FT-0575F	L-87.5	1	90-90
Umetak rama F-1222	Additional profile F-1222	L-89	1	45-45
Umetak rama F-1222	Additional profile F-1222	H-(Hpr.+17.7)	2	45-90
Kutna spojnica 710.145	Corner bracket 710.145		2	
Kutna spojnica 710.141	Corner bracket 710.141		4	
Kutna spojnica 710.136	Corner bracket 710.136		4	
Kutna spojnica 731.010	Corner bracket 731.010		4	
Kutna spojnica 710.091	Corner bracket 710.091		2	
Veznik prečke 710.066	T bracket 710.066		4	
Veznik prečke 710.079	T bracket 710.079		4	
Kutna spojnica 730.001	Corner bracket 730.001		10	
Centralna brtva rama 338.004	Central gasket-frame 338.004	1L+2Hkr		
Centralna brtva krila 338.006	Central gasket-sash 338.006	2Lkr+2Hkr		
Brtva 317.002	Rebate gasket 317.002	3Lkr+4Hkr		
Brtva prema staklu vanjska 328.003	Glazing gasket -external- 328.003	2L+2Hpreč+2Lkr+2Hkr		
Brtva prema staklu unutarnja 311.004	Glazing gasket -internal- 311.004	2L+2Hpreč+2Lkr+2Hkr		
Brtva praga 331.012	Threshold gasket 331.012	L-180	1	90-90
Izolacijski umetak 340.013	Underglass insulator 340.013	2(Lkr-131)+2(Hkr-155)		
Izolacijski umetak 340.013	Underglass insulator 340.013	2(L-91.5)+2(Hpr.-89)		
Čep okapnice F-0970 375.001	End cap for F-0970 375.001		1 par	
Umetak na pragu 363.103	End cap for threshold 363.103		1 par	
Umetak na ramu 374.043	Additional pvc profile 374.043	L-88	1	45-45
Umetak na ramu 374.043	Additional pvc profile 374.043	H-(Hpr+17)	2	45-90
Brava G-U Secury MR2 (35) tri ključanja 122.016	Multipoint lock - G-U Secury MR2 (35) -122.016		1	
Prihvatna pločica 24x6x2 122.065	Striking plate 24x6x2 122.065		2	
Prihvatni lim 24x6 (lijevi) 122.064	Striking plate 24x6 (left) 122.064		1	
Trodijelna cilindrična šarka 112.011.01 - bijela	Barrel door hinge-3 part 112.011.01 - white	2 ili (3) po krilu ovisno o visini i tež.krila 2 or (3) per sash(dep. of height and weight of sash)		
Ručka za vrata 102.028	Door handle 102.028		2	
Četvrtka 102.025	Square spindle 102.025		1	
Cilindar (35-75) 122.095	Cylinder (35-75) 122.095		1	
Štitnik cilindra 122.098	Cylinder rosette 122.098		2	
Protuprovalni umetak 141.002	Security pin 141.002		2	
Staklo 40 mm	Glass 40 mm	(L-116)x(Hpr.-89)	1	
Staklo 40 mm	Glass 40 mm	(Lkr.-155)x(Hkr-155)	1	

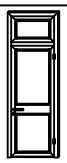




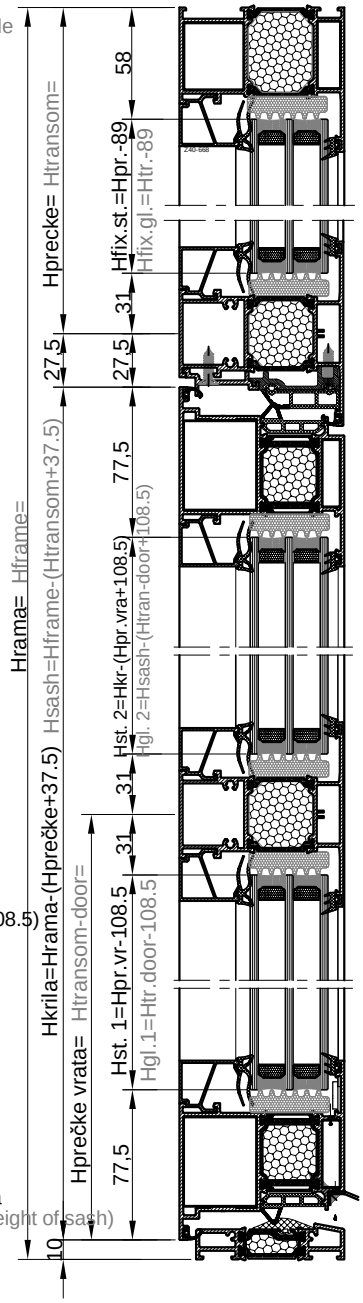
naziv name		mjera dimension	kom. pcs.	pilanje sawing angle
Ram FT-0513F	Frame FT-0513F	L	1	45-45
Ram FT-0513F	Frame FT-0513F	H	2	45-90
Krilo FT-0563F	Sash FT-0563F	L-109	2	45-45
Krilo FT-0563F	Sash FT-0563F	H-(Hpr+37.5)	2	45-45
Prag FT-0584F	Threshold FT-0584F	L-180	1	90-90
Okapnica F-0970	Drip cap profile F-0970	Lkr-58	1	90-90
Staklo lajsna Z40-667	Glazing bead Z40-667	L-99	2	90-90
Staklo lajsna Z40-667	Glazing bead Z40-667	Lkr-161	2	90-90
Staklo lajsna Z40-667	Glazing bead Z40-667	Hpr.-116	2	90-90
Staklo lajsna Z40-667	Glazing bead Z40-667	H-(Hpr.+232.5)	2	90-90
Prečka FT-0575F	Transom FT-0575F	L-87.5	1	90-90
Umetak rama F-1222	Additional profile F-1222	L-89	1	45-45
Umetak rama F-1222	Additional profile F-1222	H-(Hpr.+17.7)	2	45-90
Kutna spojnica 710.145	Corner bracket 710.145		2	
Kutna spojnica 710.169	Corner bracket 710.169		4	
Kutna spojnica 710.136	Corner bracket 710.136		4	
Kutna spojnica 731.010	Corner bracket 731.010		4	
Kutna spojnica 710.091	Corner bracket 710.091		2	
Veznik prečke 710.066	T bracket 710.066		4	
Veznik prečke 710.079	T bracket 710.079		4	
Kutna spojnica 730.001	Corner bracket 730.001		10	
Centralna brtva rama 338.004	Central gasket-frame 338.004	1L+2Hkr		
Centralna brtva krila 338.006	Central gasket-sash 338.006	2Lkr+2Hkr		
Brtva 317.002	Rebate gasket 317.002	3Lkr+4Hkr		
Brtva prema staklu vanjska 328.003	Glazing gasket -external- 328.003	2L+2Hpreč+2Lkr+2Hkr		
Brtva prema staklu unutarnja 311.004	Glazing gasket -internal- 311.004	2L+2Hpreč+2Lkr+2Hkr		
Brtva praga 331.012	Threshold gasket 331.012	L-180	1	90-90
Izolacijski umetak 340.013	Underglass insulator 340.013	2(Lkr-151)+2(Hkr-175)		
Izolacijski umetak 340.013	Underglass insulator 340.013	2(L-91.5)+2(Hpr.-89)		
Čep okapnice F-0970 375.001	End cap for F-0970 375.001		1 par	
Umetak na pragu 363.103	End cap for threshold 363.103		1 par	
Umetak na ramu 374.043	Additional pvc profile 374.043	L-88	1	45-45
Umetak na ramu 374.043	Additional pvc profile 374.043	H-(Hpr+17)	2	45-90
Brava G-U Secury MR2 (45) tri ključanja 122.015	Multipoint lock - G-U Secury MR2 (45) -122.015		1	
Prihvatna pločica 24x6x2 122.065	Striking plate 24x6x2 122.065		2	
Prihvatni lim 24x6 (lijevi) 122.064	Striking plate 24x6 (left) 122.064		1	
Trodijelna cilindrična šarka 112.011.01 - bijela	Barrel door hinge-3 part 112.011.01 - white	2 ili (3) po krilu ovisno o visini i tež.krila 2 or (3) per sash(dep. of height and weight of sash)		
Četvrtka 102.025	Square spindle 102.025		1	
Ručka za vrata 102.028	Door handle 102.028		2	
Cilindar (35-75) 122.095	Cylinder (35-75) 122.095		1	
Štitnik cilindra 122.098	Cylinder rosette 122.098		2	
Protuprovalni umetak 141.002	Security pin 141.002		2	
Staklo 44 mm -fix	Glass 44 mm -fix	(L-116)x(Hpr.-89)	1	
Staklo 44 mm	Glass 44 mm	(Lkr.-175)x(Hkr-175)	1	

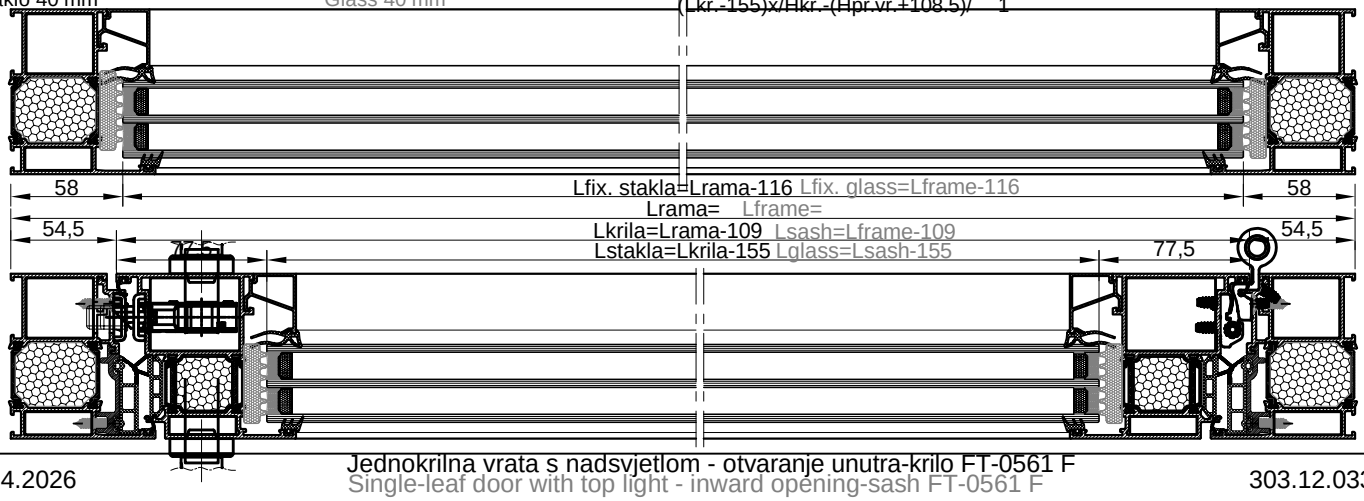




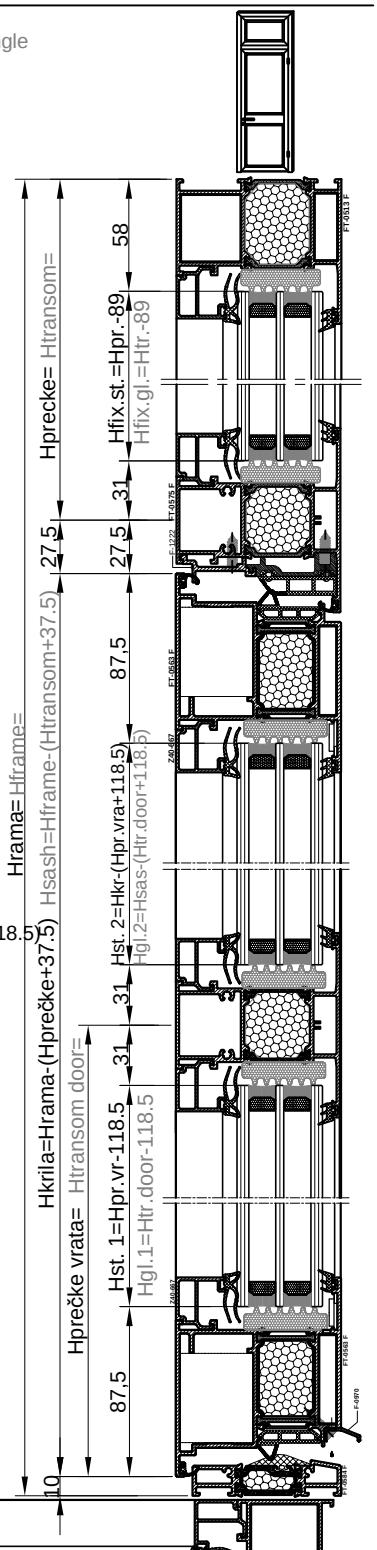


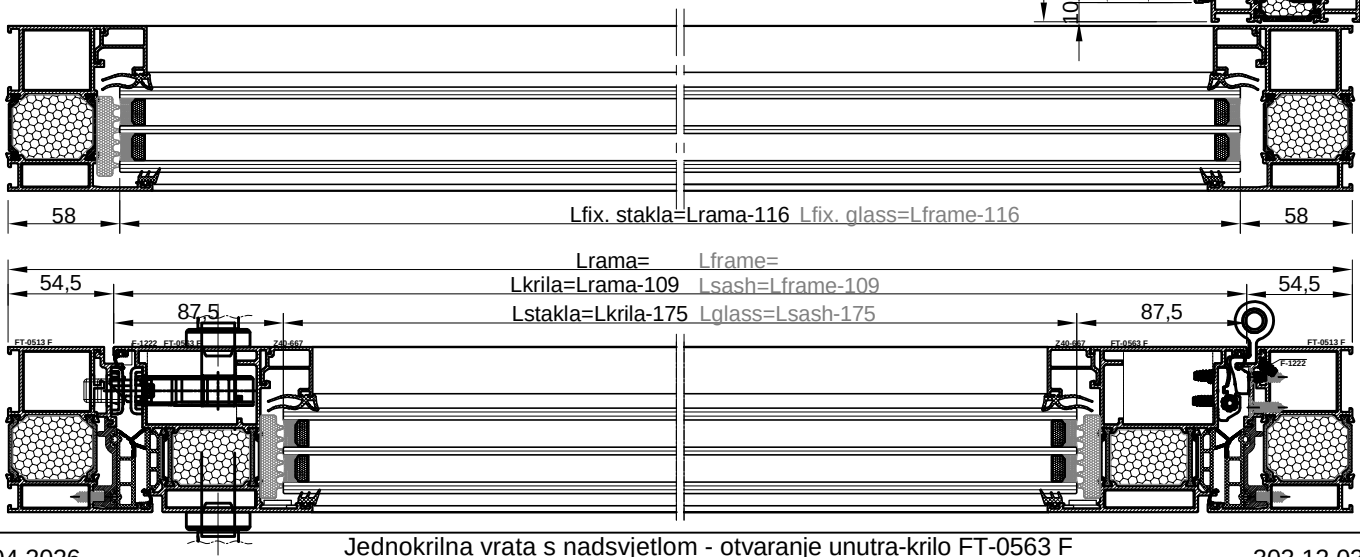
naziv name		mjera dimension	kom. pcs.	pilanje sawing angle
Ram FT-0513F	Frame FT-0513F	L	1	45-45
Ram FT-0513F	Frame FT-0513F	H	2	45-90
Krilo FT-0561F	Sash FT-0561F	L-109	2	45-45
Krilo FT-0561F	Sash FT-0561F	H-(Hpr.+37.5)	2	45-45
Prag FT-0584F	Threshold FT-0584F	L-180	1	90-90
Okapnica F-0970	Drip cap profile F-0970	Lkr-58	1	90-90
Staklo lajsna Z40-668	Glazing bead Z40-668	L-99	2	90-90
Staklo lajsna Z40-668	Glazing bead Z40-668	Lkr-141	4	90-90
Staklo lajsna Z40-668	Glazing bead Z40-668	Hpr.-116	2	90-90
Staklo lajsna Z40-668	Glazing bead Z40-668	Hpr.vr.-137	2	90-90
Staklo lajsna Z40-668	Glazing bead Z40-668	H-(Hpr.+Hpr.vr.+174.5)	2	90-90
Prečka FT-0575F	Transom FT-0575F	L-87.5	1	90-90
Prečka na krilu FT-0575F	Transom-in sash FT-0575F	Lkr-128	1	90-90
Umetak rama F-1222	Additional profile F-1222	L-89.1	1	45-45
Umetak rama F-1222	Additional profile F-1222	H-(Hpr+17.7)	2	45-90
Kutna spojnica 710.145	Corner bracket 710.145		2	
Kutna spojnica 710.141	Corner bracket 710.141		4	
Kutna spojnica 710.136	Corner bracket 710.136		4	
Kutna spojnica 731.010	Corner bracket 731.010		4	
Kutna spojnica 710.091	Corner bracket 710.091		2	
Kutna spojnica 730.001	Corner bracket 730.001		10	
Veznik prečke 710.066	T bracket 710.066		8	
Veznik prečke 710.079	T bracket 710.079		4	
Veznik prečke 710.171	T bracket 710.171		4	
Centralna brtva rama 338.004	Central gasket-frame 338.004	1L+2H		
Centralna brtva krila 338.006	Central gasket-sash 338.006	2Lkr+2Hkr		
Brtva 317.002	Rebate gasket 317.002	3Lkr+4Hkr		
Brtva prema staklu vanjska 328.003	Glazing gasket -external- 328.003	2L+2Hpreč+4Lkr+2Hkr		
Brtva prema staklu unutarnja 311.004	Glazing gasket -internal- 311.004	2L+2Hpreč+4Lkr+2Hkr		
Brtva praga 331.012	Threshold gasket 331.012	L-180	1	90-90
Izolacijski umetak 340.013	Underglass insulator 340.013	2(L-91.5)+2(Hpr.-89)		
Izolacijski umetak 340.013	Underglass insulator 340.013	4(Lkr-131)+2(Hpr.vr.-108.5)+2/Hkr-(Hpr.vr.+108.5)		
Čep okapnice F-0970 375.001	End cap for F-0970 375.001		1 par	
Umetak na pragu 363.103	End cap for threshold 363.103		1 par	
Umetak na ramu 374.043	Additional pvc profile 374.043	L-88	1	45-45
Umetak na ramu 374.043	Additional pvc profile 374.043	H-(Hpr+17)	2	45-90
Brava G-U Secury s MR2 (35) tri ključanja 122.016	Multipoint lock - G-U Secury MR2 (35) - 122.016		1	
Prihvatna pločica 24x6x2 122.065	Striking plate 24x6x2 122.065		2	
Prihvatni lim 24x6 (lijevi) 122.064	Striking plate 24x6 (left) 122.064		1	
Trodijelna cilindrična šarka 112.011.01 - bijela	Barrel door hinge-3 part 112.011.01 - white	2 ili (3) po krilu ovisno o visini i tež.krila 2 or (3) per sash(dep. of height and weight of sash)		
Ručka za vrata 102.028	Door handle 102.028		2	
Četvrtka 102.025	Sqaure spindle 102.025		1	
Cilindar (35-75) 122.095	Cylinder (35-75) 122.095		1	
Štitnik cilindra 122.098	Cylinder rosette 122.098		2	
Protuprovalni umetak 141.002	Security pin 141.002		2	
Staklo 40 mm	Glass 40 mm	(L-116)x(Hpr.-89)	1	
Staklo 40 mm	Glass 40 mm	(Lkr.-155)x(Hpr.vr.-108.5)	1	
Staklo 40 mm	Glass 40 mm	(Lkr.-155)x/Hkr.-(Hpr.vr.+108.5)/	1	

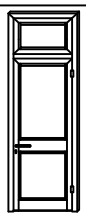




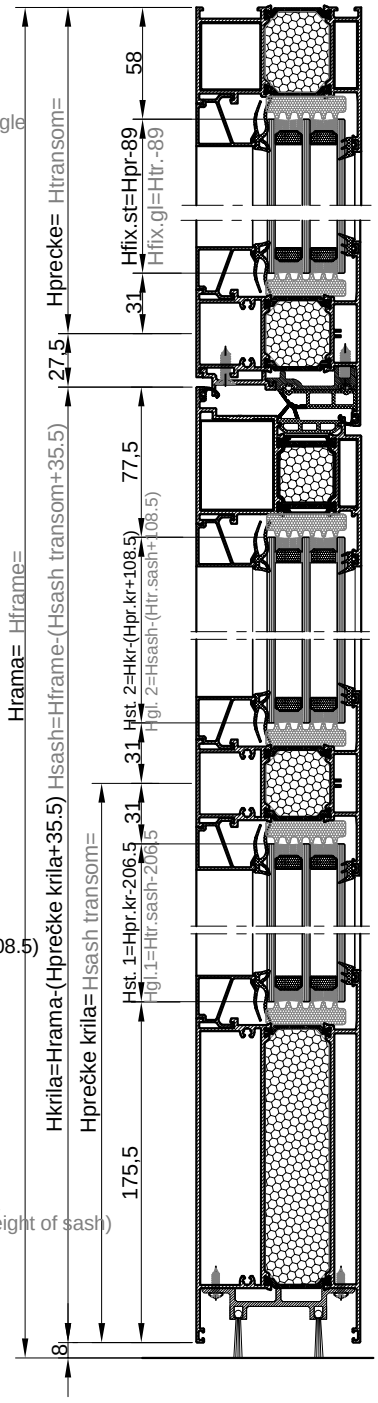
naziv name		mjera dimension	kom. pcs.	pilanje sawing angle
Ram FT-0513F	Frame FT-0513F	L	1	45-45
Ram FT-0513F	Frame FT-0513F	H	2	45-90
Krilo FT-0563F	Sash FT-0563F	L-109	2	45-45
Krilo FT-0563F	Sash FT-0563F	H-(Hpr.+37.5)	2	45-45
Prag FT-0584F	Threshold FT-0584F	L-180	1	90-90
Okapnica F-0970	Drip cap profile F-0970	Lkr-58	1	90-90
Staklo lajsna Z40-667	Glazing bead Z40-667	L-99	2	90-90
Staklo lajsna Z40-667	Glazing bead Z40-667	Lkr-161	4	90-90
Staklo lajsna Z40-667	Glazing bead Z40-667	Hpr.-116	2	90-90
Staklo lajsna Z40-667	Glazing bead Z40-667	Hpr.vr.-147	2	90-90
Staklo lajsna Z40-667	Glazing bead Z40-667	H-(Hpr.+Hpr.vr.+184.5)	2	90-90
Prečka FT-0575F	Transom FT-0575F	L-87.5	1	90-90
Prečka na krilu FT-0575F	Transom-in sash FT-0575F	Lkr-151	1	90-90
Umetak rama F-1222	Additional profile F-1222	L-89	1	45-45
Umetak rama F-1222	Additional profile F-1222	H-(Hpr+17.7)	2	45-90
Kutna spojnica 710.145	Corner bracket 710.145		2	
Kutna spojnica 710.141	Corner bracket 710.169		4	
Kutna spojnica 710.136	Corner bracket 710.136		4	
Kutna spojnica 731.010	Corner bracket 731.010		4	
Kutna spojnica 710.091	Corner bracket 710.091		2	
Kutna spojnica 730.001	Corner bracket 730.001		10	
Veznik prečke 710.066	T bracket 710.066		8	
Veznik prečke 710.079	T bracket 710.079		4	
Veznik prečke 710.171	T bracket 710.171		4	
Centralna brtva rama 338.004	Central gasket-frame 338.004	1L+2H		
Centralna brtva krila 338.006	Central gasket-sash 338.006	2Lkr+2Hkr		
Brtva 317.002	Rebate gasket 317.002	3Lkr+4Hkr		
Brtva prema staklu vanjska 328.003	Glazing gasket -external- 328.003	2L+2Hpreč+4Lkr+2Hkr		
Brtva prema staklu unutarnja 311.004	Glazing gasket -internal- 311.004	2L+2Hpreč+4Lkr+2Hkr		
Brtva praga 331.012	Threshold gasket 331.012	L-180	1	90-90
Izolacijski umetak 340.013	Underglass insulator 340.013	2(L-91.5)+2(Hpr.-89)		
Izolacijski umetak 340.013	Underglass insulator 340.013	4(Lkr-151)+2(Hpr.vr.-118.5)+2/Hkr-(Hpr.vr.+118.5)		
Čep okapnice F-0970 375.001	End cap for F-0970 375.001		1 par	
Umetak na pragu 363.103	End cap for threshold 363.103		1 par	
Umetak na ramu 374.043	Additional pvc profile 374.043	L-88	1	45-45
Umetak na ramu 374.043	Additional pvc profile 374.043	H-(Hpr+17)	2	45-90
Brava G-U Secury s MR2 (45) tri ključanja 122.015	Multipoint lock - G-U Secury MR2 (45) -122.015		1	
Prihvatna pločica 24x6x2 122.065	Striking plate 24x6x2 122.065		2	
Prihvatni lim 24x6 (lijevi) 122.064	Striking plate 24x6 (left) 122.064		1	
Trodijelna cilindrična šarka 112.011.01 - bijela	Barrel door hinge-3 part 112.011.01 - white	2 ili (3) po krilu ovisno o visini i tež.krila		
Ručka za vrata 102.028	Door handle 102.028		2	
Četvrtka 102.025	Square spindle 102.025		1	
Cilindar (35-75) 122.095	Cylinder (35-75) 122.095		1	
Štitnik cilindra 122.098	Cylinder rosette 122.098		2	
Protuprovalni umetak 141.002	Security pin 141.002		2	
Staklo 44 mm	Glass 44 mm	(L-116)x(Hpr.-89)	1	
Staklo 44 mm	Glass 44 mm	(Lkr.-175)x(Hpr.vr.-165)	1	
Staklo 44 mm	Glass 44 mm	(Lkr.-175)x/Hkr.-(Hpr.vr.+118.5)/	1	

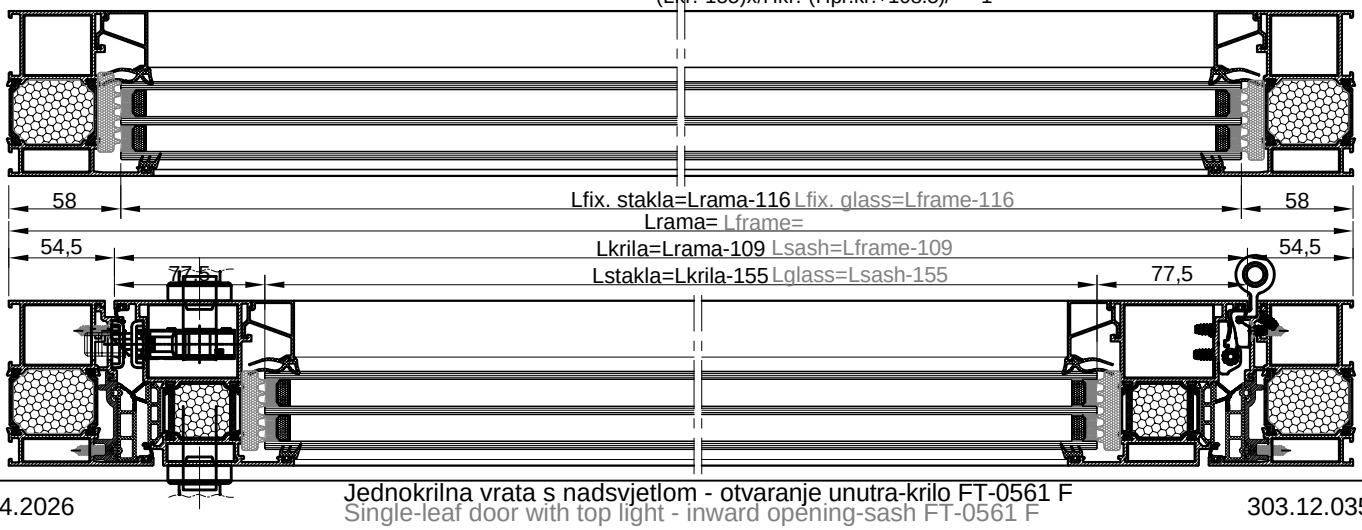


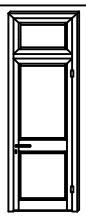




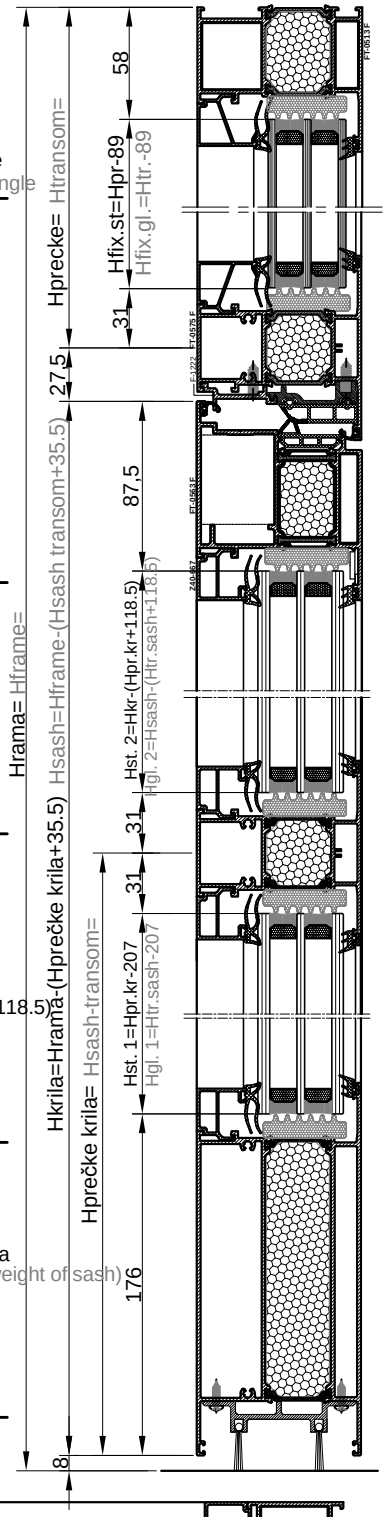
naziv name		mjera dimension	kom. pcs.	pilanje sawing angle
Ram FT-0513F	Frame FT-0513F	L	1	45-45
Ram FT-0513F	Frame FT-0513F	H	2	45-90
Krilo FT-0561F	Sash FT-0561F	L-109	1	45-45
Krilo FT-0561F	Sash FT-0561F	H-(Hpr.kr+35.5)	2	45-90
Staklo lajsna Z40-668	Glazing bead Z40-668	L-99	2	90-90
Staklo lajsna Z40-668	Glazing bead Z40-668	Lkr-141	4	90-90
Staklo lajsna Z40-668	Glazing bead Z40-668	Hpr.-116	2	90-90
Staklo lajsna Z40-668	Glazing bead Z40-668	Hpr.kr.-233.5	2	90-90
Staklo lajsna Z40-668	Glazing bead Z40-668	H-(Hpr.+Hpr.kr.+172.5)	2	90-90
Prečka FT-0575F	Transom FT-0575F	L-87.5	1	90-90
Prečka na krilu FT-0575F	Transom-in sash FT-0575F	Lkr-128	1	90-90
Umetak rama F-1222	Additional profile F-1222	L-89.1	1	45-45
Umetak rama F-1222	Additional profile F-1222	H-(Hpr+17.7)	2	45-90
Parapetna prečka FT-0576F	Transom-bottom sash prof. FT-0576F	Lkr-128	1	90-90
Kutna spojnica 710.145	Corner bracket 710.145		2	
Kutna spojnica 710.141	Corner bracket 710.141		2	
Kutna spojnica 710.136	Corner bracket 710.136		2	
Kutna spojnica 731.010	Corner bracket 731.010		2	
Kutna spojnica 710.091	Corner bracket 710.091		2	
Kutna spojnica 730.001	Corner bracket 730.001		6	
Veznik prečke 710.066	T bracket 710.066		12	
Veznik prečke 710.079	T bracket 710.079		4	
Veznik prečke 710.171	T bracket 710.171		8	
Centralna brtva rama 338.004	Central gasket-frame 338.004	1L+2H		
Centralna brtva krila 338.006	Central gasket-sash 338.006	1Lkr+2Hkr		
Brtva 317.002	Rebate gasket 317.002	2Lkr+4Hkr		
Brtva prema staklu vanjska 328.003	Glazing gasket -external- 328.003	2L+2Hpr+4Lkr+2Hkr		
Brtva prema staklu unut. 311.004	Glazing gasket -internal- 311.004	2L+2Hpr+4Lkr+2Hkr		
Izolacijski umetak 340.013	Underglass insulator 340.013	2(L-91.5)+2(Hpr.-89)		
Izolacijski umetak 340.013	Underglass insulator 340.013	4(Lkr-131)+2(Hpr.kr.-206.5)+2/Hkr-(Hpr.vr.+108.5)		
Umetak na ramu 374.043	Additional pvc profile 374.043	L-88	1	45-45
Umetak na ramu 374.043	Additional pvc profile 374.043	H-(Hpr+17)	2	45-90
Pvc umetak u parap. prečki 374.048	Pvc prof. for transom /bottom sash prof./ 374.048	Lkr-33	1	
Četkasta brtva 347.001	Brush seal 347.001		2	
Brava G-U Secury s MR2 (35) tri ključanja 122.016	Multipoint lock - G-U Secury MR2 (35) -122.016		1	
Prihvatna pločica 24x6x2 122.065	Striking plate 24x6x2 122.065		2	
Prihvatni lim 24x6 (lijevi) 122.064	Striking plate 24x6 (left) 122.064		1	
Trodijelna cilindrična šarka 112.011.01 - bijela	Barrel door hinge-3 part 112.011.01 - white	2 ili (3) po krilu ovisno o visini i tež.krila 2 or (3) per sash(dep. of height and weight of sash)		
Ručka za vrata 102.028	Door handle 102.028		2	
Četvrtka 102.025	Square spindle 102.025		1	
Cilindar (35-75) 122.095	Cylinder (35-75) 122.095		1	
Štitnik cilindra 122.098	Cylinder rosette 122.098		2	
Protuprovalni umetak 141.002	Security pin 141.002		2	
Staklo 40 mm	Glass 40 mm	(L-116)x(Hpr.-89)	1	
Staklo 40 mm	Glass 40 mm	(Lkr.-155)x(Hpr.kr.-206.5)	1	
Staklo 40 mm	Glass 40 mm	(Lkr.-155)x/Hkr.-(Hpr.kr.+108.5)/	1	

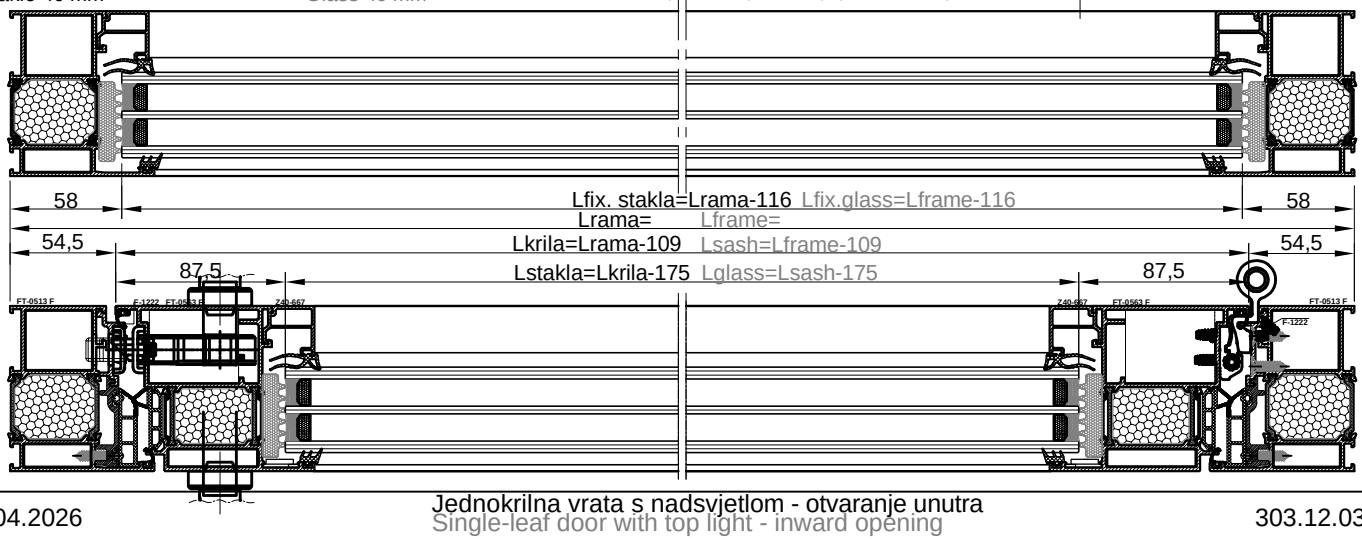


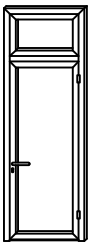




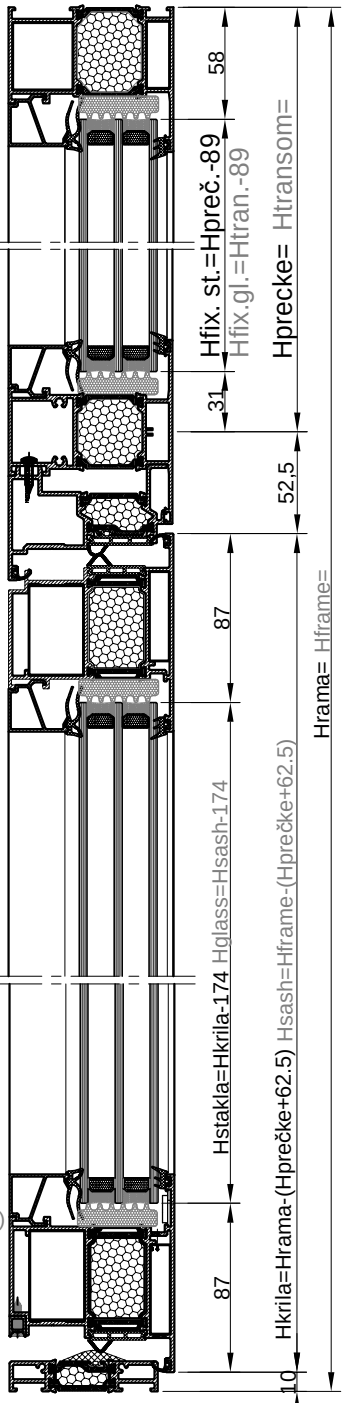
naziv name		mjera dimension	kom. pcs.	pilanje sawing angle
Ram FT-0513F	Frame FT-0513F	L	1	45-45
Ram FT-0513F	Frame FT-0513F	H	2	45-90
Krilo FT-0563F	Sash FT-0563F	L-109	1	45-45
Krilo FT-0563F	Sash FT-0563F	H-(Hpr.kr+35.5)	2	45-90
Staklo lajsna Z40-667	Glazing bead Z40-667	L-99	2	90-90
Staklo lajsna Z40-667	Glazing bead Z40-667	Lkr-161	4	90-90
Staklo lajsna Z40-667	GLazing bead Z40-667	Hpr.-116	2	90-90
Staklo lajsna Z40-667	Glazing bead Z40-667	Hpr.kr.-233.5	2	90-90
Staklo lajsna Z40-667	Glazing bead Z40-667	H-(Hpr.+Hpr.kr.+182.5)	2	90-90
Prečka FT-0575F	Transom FT-0575F	L-87.5	1	90-90
Prečka na krilu FT-0575F	Transom-in sash FT-0575F	Lkr-151	1	90-90
Umetak rama F-1222	Additional profile F-1222	L-89	1	45-45
Umetak rama F-1222	Additional profile F-1222	H-(Hpr+17.7)	2	45-90
Parapetna prečka FT-0576F	Transom-bottom sash prof. FT-0576F	Lkr-151	1	90-90
Kutna spojnica 710.145	Corner bracket 710.145		2	
Kutna spojnica 710.169	Corner bracket 710.169		2	
Kutna spojnica 710.136	Corner bracket 710.136		2	
Kutna spojnica 731.010	Corner bracket 731.010		2	
Kutna spojnica 710.091	Corner bracket 710.091		2	
Kutna spojnica 730.001	Corner bracket 730.001		6	
Veznik prečke 710.066	T bracket 710.066		12	
Veznik prečke 710.079	T bracket 710.079		4	
Veznik prečke 710.171	T bracket 710.171		8	
Centralna brtva rama 338.004	Central gasket-frame 338.004	1L+2H		
Centralna brtva krila 338.006	Central gasket-sash 338.006	1Lkr+2Hkr		
Brtva 317.002	Rebate gasket 317.002	2Lkr+4Hkr		
Brtva prema staklu vanjska 328.003	Glazing gasket -external- 328.003	2L+2Hpr+4Lkr+2Hkr		
Brtva prema staklu unut. 311.004	Glazing gasket -internal- 311.004	2L+2Hpr+4Lkr+2Hkr		
Izolacijski umetak 340.013	Underglass insulator 340.013	2(L-91.5)+2(Hpr.-89)		
Izolacijski umetak 340.013	Underglass insulator 340.013	4(Lkr-151)+2(Hpr.kr.-216.5)+2/Hkr-(Hpr.vr.+118.5)		
Umetak na ramu 374.043	Additional pvc profile 374.043	L-88	1	45-45
Umetak na ramu 374.043	Additional pvc profile 374.043	H-(Hpr+17)	2	45-90
Pvc umetak u parap. prečki 374.048	Pvc prof. for transom /bottom sash prof./ 374.048	Lkr-33	1	
Četkasta brtva 347.001	Brush seal 347.001		2	
Brava G-U Secury s MR2 (45) tri ključanja 122.015	Multipoint lock - G-U Secury MR2 (45) -122.015		1	
Prihvatna pločica 24x6x2 122.065	Striking plate 24x6x2 122.065		2	
Prihvatni lim 24x6 (lijevi) 122.064	Striking plate 24x6 (left) 122.064		1	
Trodijelna cilindrična šarka 112.011.01 - bijela	Barrel door hinge-3 part 112.011.01 - white	2 ili (3) po krilu ovisno o visini i tež.krila 2 or (3) per sash(dep. of height and weight of sash)		
Ručka za vrata 102.028	Door handle 102.028		2	
Četvrtka 102.025	Square spindle 102.025		1	
Cilindar (35-75) 122.095	Cylinder (35-75) 122.095		1	
Štitnik cilindra 122.098	Cylinder rosette 122.098		2	
Protuprovalni umetak 141.002	Security pin 141.002		2	
Staklo 40 mm	Glass 40 mm	(L-116)x(Hpr.-89)	1	
Staklo 40 mm	Glass 40 mm	(Lkr.-175)x(Hpr.kr.-207)	1	
Staklo 40 mm	Glass 40 mm	(Lkr.-175)x/Hkr.-(Hpr.kr.+118.5)/	1	

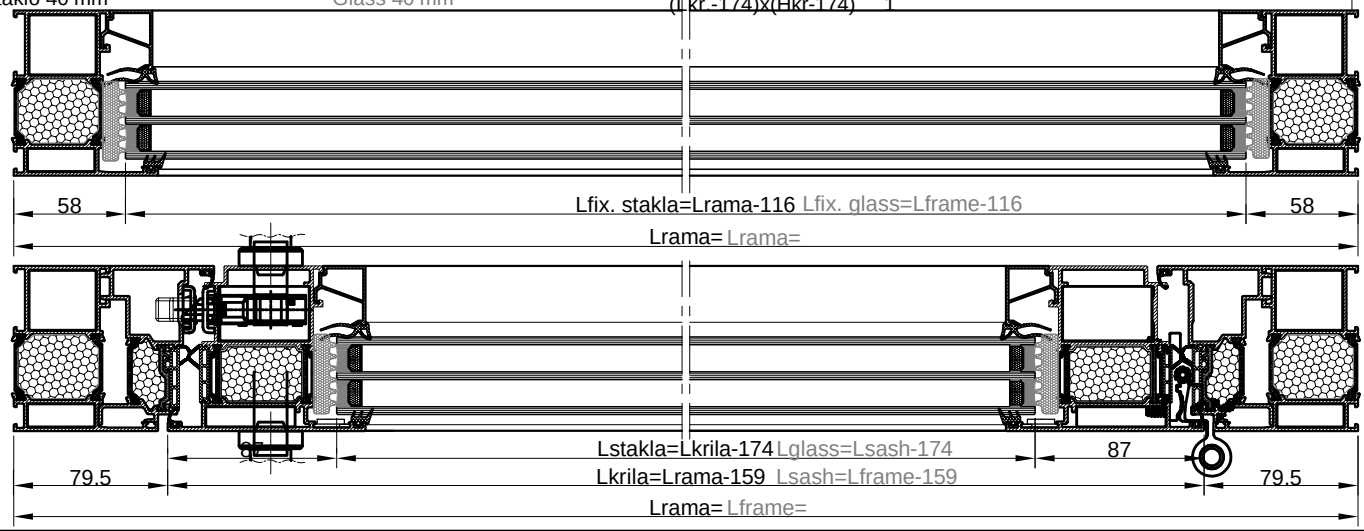


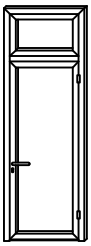




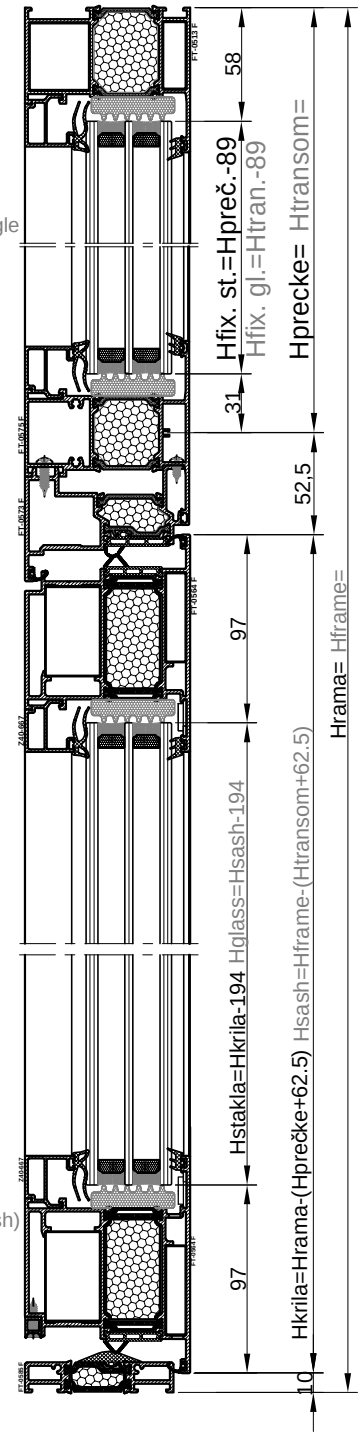
naziv name		mjera dimension	kom. pcs.	pilanje sawing angle
Ram FT-0513F	Frame FT-0513F	L	1	45-45
Ram FT-0513F	Frame FT-0513F	H	2	45-90
Krilo FT-0562F	Sash FT-0562F	L-159	2	45-45
Krilo FT-0562F	Sash FT-0562F	H-(Hpr.+62.5)	2	45-45
Umetak F-1188	Additional profile F-1188	Lkr-58	1	90-90
Prečka FT-0575	Transom FT-0575	L-87.5	1	90-90
Staklo lajsna Z40-668	Glazing bead Z40-668	L-99	2	90-90
Staklo lajsna Z40-668	Glazing bead Z40-668	Lkr-160	2	90-90
Staklo lajsna Z40-668	Glazing bead Z40-668	Hpreč.-116	2	90-90
Staklo lajsna Z40-668	Glazing bead Z40-668	Hkr-204	2	90-90
Prag FT-0585F	Threshold FT-0585F	L-217	1	90-90
Umetak FT-0573F	Additional profile FT-0573F	L-87.5	1	45-45
Umetak FT-0573F	Additional profile FT-0573F	H-(Hpreč.+17)	2	45-90
Kutna spojnica 710.145	Corner bracket 710.145		2	
Kutna spojnica 710.133	Corner bracket 710.133		4	
Kutna spojnica 710.091	Corner bracket 710.091		2	
Kutna spojnica 710.134	Corner bracket 710.134		4	
Kutna spojnica 731.010	Corner bracket 731.010		4	
Kutna spojnica 730.001	Corner bracket 730.001		12	
Veznik prečke 710.066	T bracket 710.066		4	
Veznik prečke 710.079	T bracket 710.079		4	
Centralna brtva rama 338.009	Central gasket-frame 338.009	1Lkr+2Hkr		
Centralna brtva krila 338.010	Central gasket-sash 338.010	2Lkr+2Hkr		
Brtva prema staklu vanjska 328.003	Glazing gasket -external- 328.003	2Lkr+2Hkr+2Lrama+2Hpreč		
Brtva prema staklu unutarnja 311.004	Glazing gasket -internal- 311.004	2Lkr+2Hkr+2Lrama+2Hpreč		
Brtva na spoju rama i krila 317.002	Rebate gasket 317.002	3Lkr+4Hkr		
Brtva praga 331.012	Threshold gasket 331.012	L-217	1	90-90
Izolacijski umetak 340.013	Underglass insulator 340.013	2(Lkr-150)+2(Hkr-174)		
Izolacijski umetak 340.013	Underglass insulator 340.013	2(L-91.5)+2(Hpr.-89)		
Umetak na pragu 373.020	End cap for threshold 373.020		1 par	
Brava G-U Secury s MR2 (35) tri ključanja 122.016	Multipoint lock - G-U Secury MR2 (35) -122.016		1	
Prihvatna pločica 24x6x2 122.065	Striking plate 24x6x2 122.065		2	
Prihvatni lim 24x6 (desni) 122.063	Striking plate 24x6 (right) 122.063		1	
Trodijelna cilindrična šarka 112.012.01 - bijela	Barrel door hinge-3 part 112.012.01 - white	2 ili (3) po krilu ovisno o visini i tež.krila 2 or (3) per sash(dep. of height and weight of sash)		
Ručka za vrata 102.028	Door handle 102.028		2	
Četvrtka 102.025	Square spindle 102.025		1	
Cilindar (35-75) 122.095	Cylinder (35-75) 122.095		1	
Štitnik cilindra 122.098	Cylinder rosette 122.098		2	
Protuprovalni umetak 141.002	Security pin 141.002		2	
Staklo 40 mm	Glass 40 mm	(L-116)x(Hpr.-89)	1	
Staklo 40 mm	Glass 40 mm	(Lkr.-174)x(Hkr-174)	1	

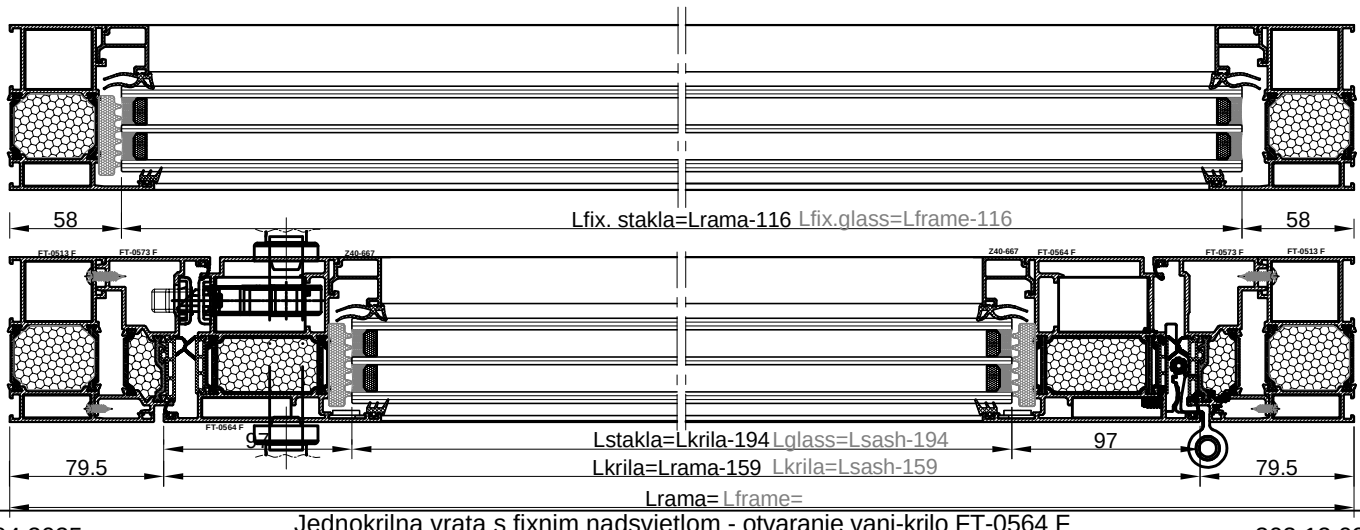


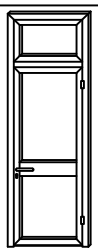




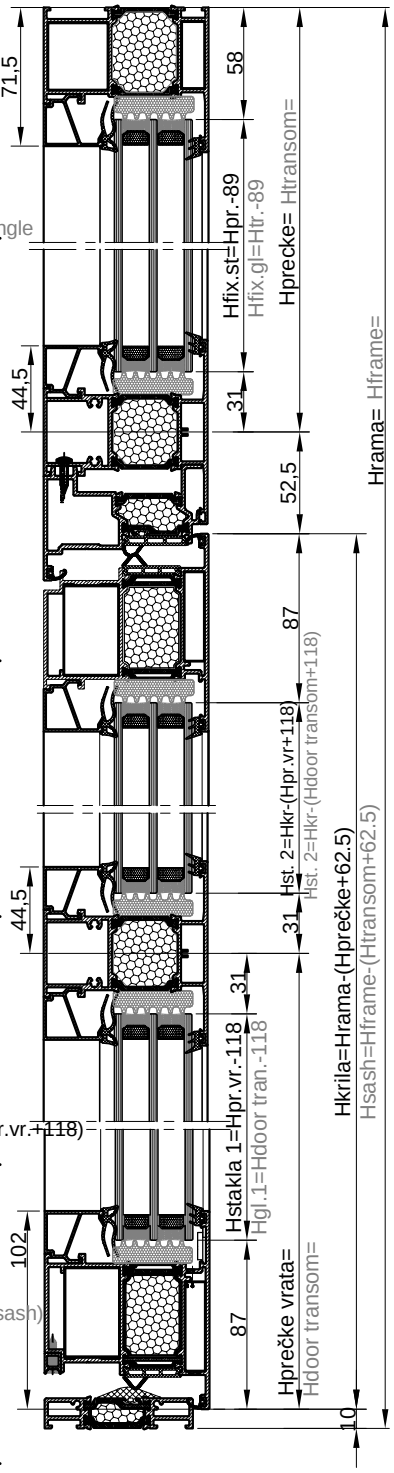
naziv name		mjera dimension	kom. pcs.	pilanje sawing angle
Ram FT-0513F	Frame FT-0513F	L	1	45-45
Ram FT-0513F	Frame FT-0513F	H	2	45-90
Krilo FT-0564F	Sash FT-0564F	L-159	2	45-45
Krilo FT-0564F	Sash FT-0564F	H-(Hpr.+62.5)	2	45-45
Umetak F-1188	Additional profile F-1188	Lkr-58	1	90-90
Prečka FT-0575F	Transom FT-0575F	L-87.5	1	90-90
Staklo lajsna Z40-667	Glazing bead Z40-667	L-99	2	90-90
Staklo lajsna Z40-667	Glazing bead Z40-667	Lkr-180	2	90-90
Staklo lajsna Z40-667	Glazing bead Z40-667	Hpreč.-116	2	90-90
Staklo lajsna Z40-667	Glazing bead Z40-667	Hkr-224	2	90-90
Prag FT-0585F	Threshold FT-0585F	L-217	1	90-90
Umetak FT-0573F	Additional profile FT-0573F	L-87.5	1	45-45
Umetak FT-0573F	Additional profile FT-0573F	H-(Hpreč.+17)	2	45-90
Kutna spojnica 710.145	Corner bracket 710.145		2	
Kutna spojnica 710.133	Corner bracket 710.133		4	
Kutna spojnica 710.091	Corner bracket 710.091		2	
Kutna spojnica 710.134	Corner bracket 710.134		4	
Kutna spojnica 731.010	Corner bracket 731.010		4	
Kutna spojnica 730.001	Corner bracket 730.001		6	
Veznik prečke 710.066	T bracket 710.066		4	
Veznik prečke 710.079	T bracket 710.079		4	
Centralna brtva rama 338.009	Central gasket-frame 338.009	1Lkr+2Hkr		
Centralna brtva krila 338.010	Central gasket-sash 338.010	2Lkr+2Hkr		
Brtva prema staklu vanjska 328.003	Glazing gasket -external- 328.003	2Lkr+2Hkr+2Lrama+2Hpreč		
Brtva prema staklu unutarnja 311.004	Glazing gasket -internal- 311.004	2Lkr+2Hkr+2Lrama+2Hpreč		
Brtva na spoju rama i krila 317.002	Rebate gasket 317.002	3Lkr+4Hkr		
Brtva praga 331.012	Threshold gasket 331.012	L-217	1	90-90
Izolacijski umetak 340.013	Underglass insulator 340.013	2(Lkr-170)+2(Hkr-194)		
Izolacijski umetak 340.013	Underglass insulator 340.013	2(L-91.5)+2(Hpr.-89)		
Umetak na pragu 373.020	End cap for threshold 373.020		1 par	
Brava G-U Secury s MR2 (45) tri ključanja 122.015	Multipoint lock - G-U Secury MR2 (45) -122.015		1	
Prihvatna pločica 24x6x2 122.065	Striking plate 24x6x2 122.065		2	
Prihvatni lim 24x6 (desni) 122.063	Striking plate 24x6 (right) 122.063		1	
Trodijelna cilindrična šarka 112.012.01 - bijela	Barrel door hinge-3 part 112.012.01 - white	2 ili (3) po krilu ovisno o visini i tež.krila 2 or (3) per sash(dep. of height and weight of sash)		
Ručka za vrata 102.028	Door handle 102.028		2	
Četvrtka 102.025	Square spindle 102.025		1	
Cilindar (35-75) 122.095	Cylinder (35-75) 122.095		1	
Štitnik cilindra 122.098	Cylinder rosette 122.098		2	
Protuprovalni umetak 141.002	Security pin 141.002		2	

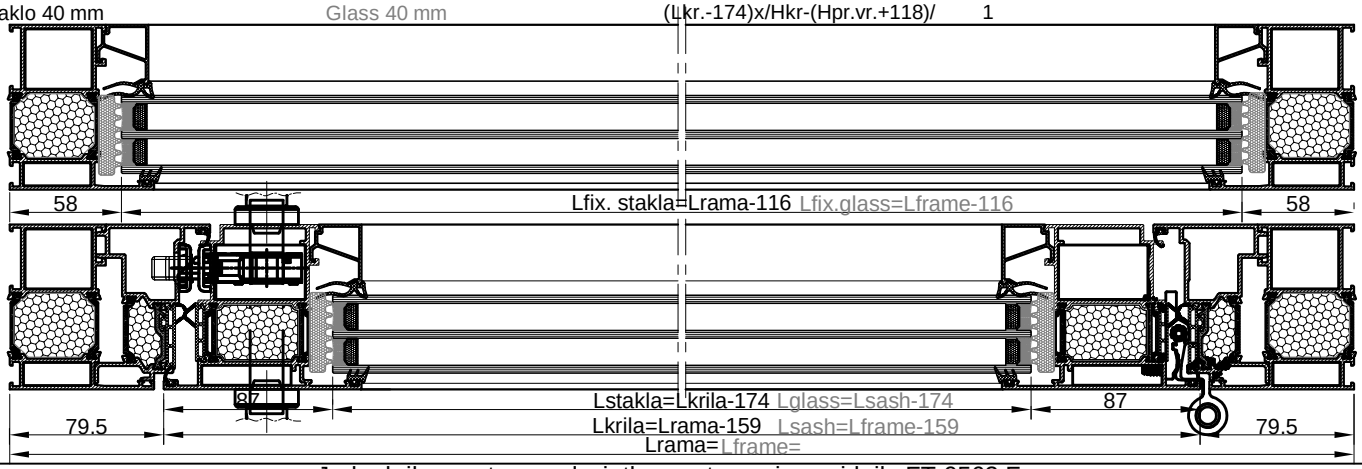


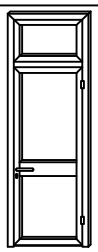




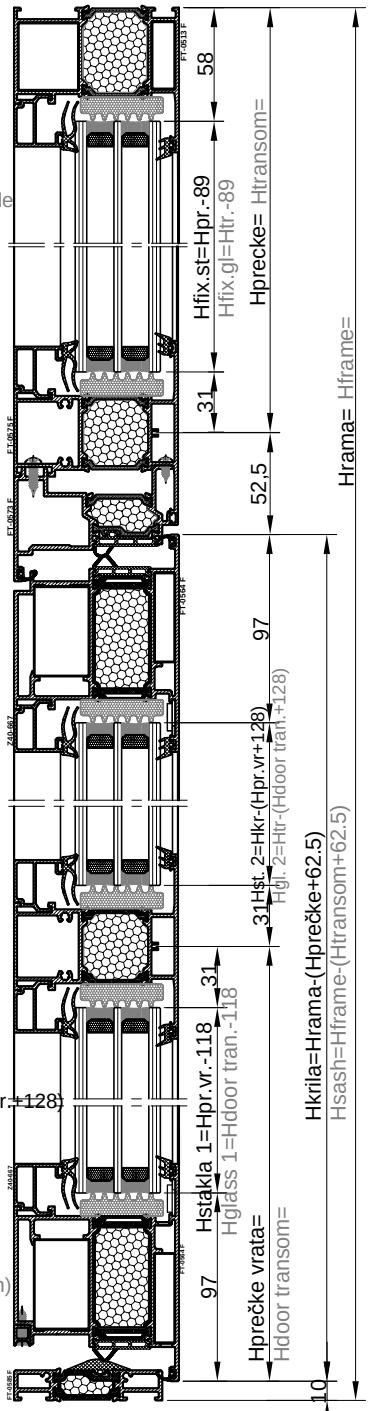
naziv name		mjera dimension	kom. pcs.	pilanje sawing angle
Ram FT-0513F	Frame FT-0513F	L	1	45-45
Ram FT-0513F	Frame FT-0513F	H	2	45-90
Krilo FT-0562F	Sash FT-0562F	L-159	2	45-45
Krilo FT-0562F	Sash FT-0562F	H-(Hpr.+62.5)	2	45-45
Umetak F-1188	Additional profile F-1188	Lkr-58	1	90-90
Prečka FT-0575F	Transom FT-0575F	L-87.5	1	90-90
Prečka na krilu FT-0575F	Transom-in sash FT-0575F	L-147	1	90-90
Staklo lajsna Z40-668	Glazing bead Z40-668	L-99	2	90-90
Staklo lajsna Z40-668	Glazing bead Z40-668	Lkr-160	4	90-90
Staklo lajsna Z40-668	Glazing bead Z40-668	Hpreč.-116	2	90-90
Staklo lajsna Z40-668	Glazing bead Z40-668	Hpr.vr.-146.5	2	90-90
Staklo lajsna Z40-668	Glazing bead Z40-668	H-(Hpr.+Hpr.vr+209)	2	90-90
Prag FT-0585F	Threshold FT-0585 F	L-217	1	90-90
Umetak FT-0573F	Additional profile FT-0573F	L-87.5	1	45-45
Umetak FT-0573F	Additional profile FT-0573F	H-(Hpr.+17)	2	45-90
Kutna spojnica 710.145	Corner bracket 710.145		2	
Kutna spojnica 710.133	Corner bracket 710.133		4	
Kutna spojnica 710.091	Corner bracket 710.091		2	
Kutna spojnica 710.134	Corner bracket 710.134		4	
Kutna spojnica 731.010	Corner bracket 731.010		4	
Kutna spojnica 730.001	Corner bracket 730.001		12	
Veznik prečke 710.066	T bracket 710.066		8	
Veznik prečke 710.079	T bracket 710.079		4	
Veznik prečke 710.171	T bracket 710.171		4	
Centralna brtva rama 338.009	Central gasket-frame 338.009	1Lkr+2Hkr		
Centralna brtva krila 338.010	Central gasket-sash 338.010	2Lkr+2Hkr		
Brtva prema staklu vanjska 328.003	Glazing gasket -external- 328.003	2Lrama+4Lkr+2Hprečke+2Hkr		
Brtva prema staklu unutarnja 311.004	Glazing gasket -internal- 311.004	2Lrama+4Lkr+2Hprečke+2Hkr		
Brtva na spoju rama i krila 317.002	Rebate gasket 317.002	3Lkr+4Hkr		
Brtva praga 331.012	Threshold gasket 331.012	L-217	1	90-90
Izolacijski umetak 340.013	Underglass insulator 340.013	2(L-91.5)+2(Hpr.-89)		
Izolacijski umetak 340.013	Underglass insulator 340.013	4(Lkr-150)+2(Hpr.vr.-118)+2/Hkr-(Hpr.vr.+118)		
Umetak na pragu 373.020	End cap for threshold 373.020		1 par	
Brava G-U Secury s MR2 (35) tri ključanja 122.016	Multipoint lock - G-U Secury MR2 (35) -122.016		1	
Prihvatna pločica 24x6x2 122.065	Striking plate 24x6x2 122.065		2	
Prihvatni lim 24x6 (desni) 122.063	Striking plate 24x6 (right) 122.063		1	
Trodijelna cilindrična šarka 112.012.01 - bijela	Barrel door hinge-3 part 112.012.01 - white	2 ili (3) po krilu ovisno o visini i tež.krila 2 or (3) per sash(dep. of height and weight of sash)		
Ručka za vrata 102.028	Door handle 102.028		2	
Četvrtka 102.025	Square spindle 102.025		1	
Cilindar (35-75) 122.095	Cylinder (35-75) 122.095		1	
Štitnik cilindra 122.098	Cylinder rosette 122.098		2	
Protuprovalni umetak 141.002	Security pin 141.002		2	
Staklo 40 mm	Glass 40 mm	(L-116)x(Hpr.-89)		1
Staklo 40 mm	Glass 40 mm	(Lkr.-174)x(Hpr.vr.-118)		1
Staklo 40 mm	Glass 40 mm	(Lkr.-174)x/Hkr-(Hpr.vr.+118)/		1
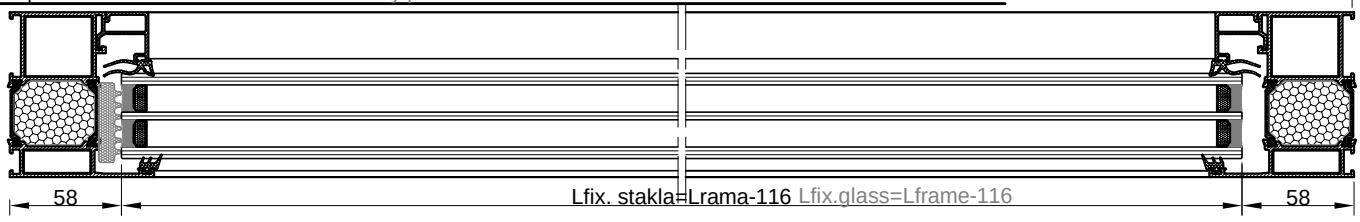




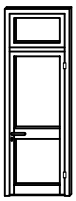


naziv name		mjera dimension	kom. pcs.	pilanje sawing angle
Ram FT-0513F	Frame FT-0513F	L	1	45-45
Ram FT-0513F	Frame FT-0513F	H	2	45-90
Krilo FT-0564F	Sash FT-0564F	L-159	2	45-45
Krilo FT-0564F	Sash FT-0564F	H-(Hpr.+62.5)	2	45-45
Umetak F-1188	Additional profile F-1188	Lkr-58	1	90-90
Prečka FT-0575F	Transom FT-0575F	L-87.5	1	90-90
Prečka na krilu FT-0575F	Transom-in sash FT-0575F	L-167	1	90-90
Staklo lajsna Z40-667	Glazing bead Z40-667	L-99	2	90-90
Staklo lajsna Z40-667	Glazing bead Z40-667	Lkr-180	4	90-90
Staklo lajsna Z40-667	Glazing bead Z40-667	Hpreč.-116	2	90-90
Staklo lajsna Z40-667	Glazing bead Z40-667	Hpr.vr.-156.5	2	90-90
Staklo lajsna Z40-667	Glazing bead Z40-667	H-(Hpr.+Hpr.vr+219)	2	90-90
Prag FT-0585F	Threshold FT-0585F	L-217	1	90-90
Umetak FT-0573F	Additional profile FT-0573F	L-87.5	1	45-45
Umetak FT-0573F	Additional profile FT-0573F	H-(Hpr.+17)	2	45-90
Kutna spojnica 710.145	Corner bracket 710.145		2	
Kutna spojnica 710.133	Corner bracket 710.133		4	
Kutna spojnica 710.091	Corner bracket 710.091		2	
Kutna spojnica 710.134	Corner bracket 710.134		4	
Kutna spojnica 731.010	Corner bracket 731.010		4	
Kutna spojnica 730.001	Corner bracket 730.001		6	
Veznik prečke 710.066	T bracket 710.066		8	
Veznik prečke 710.079	T bracket 710.079		4	
Veznik prečke 710.171	T bracket 710.171		4	
Centralna brtva rama 338.009	Central gasket-frame 338.009	1Lkr+2Hkr		
Centralna brtva krila 338.010	Central gasket-sash 338.010	2Lkr+2Hkr		
Brtva prema staklu vanjska 328.003	Glazing gasket -external- 328.003	2Lrama+4Lkr+2Hprečke+2Hkr		
Brtva prema staklu unutarnja 311.004	Glazing gasket -internal- 311.004	2Lrama+4Lkr+2Hprečke+2Hkr		
Brtva na spoju rama i krila 317.002	Rebate gasket 317.002	3Lkr+4Hkr		
Brtva praga 331.012	Threshold gasket 331.012	L-217	1	90-90
Izolacijski umetak 340.013	Underglass insulator 340.013	2(L-91.5)+2(Hpr.-89)		
Izolacijski umetak 340.013	Underglass insulator 340.013	4(Lkr-170)+2(Hpr.vr.-128)+2/Hkr-(Hpr.vr.+128)		
Umetak na pragu 373.020	End cap for threshold 373.020		1 par	
Brava G-U Secury s MR2 (45) tri ključanja 122.015	Multipoint lock - G-U Secury MR2 (45) -122.015		1	
Prihvatna pločica 24x6x2 122.065	Striking plate 24x6x2 122.065		2	
Prihvatni lim 24x6 (desni) 122.063	Striking plate 24x6 (right) 122.063		1	
Trodijelna cilindrična šarka 112.012.01 - bijela	Barrel door hinge-3 part 112.012.01 - white	2 ili (3) po krilu ovisno o visini i tež.krila 2 or (3) per sash(dep. of height and weight of sash)		
Ručka za vrata 102.028	Door handle 102.028		2	
Četvrtka 102.025	Square spindle 102.025		1	
Cilindar (35-75) 122.095	Cylinder (35-75) 122.095		1	
Štitnik cilindra 122.098	Cylinder rosette 122.098		2	
Protuprovalni umetak 141.002	Security pin 141.002		2	

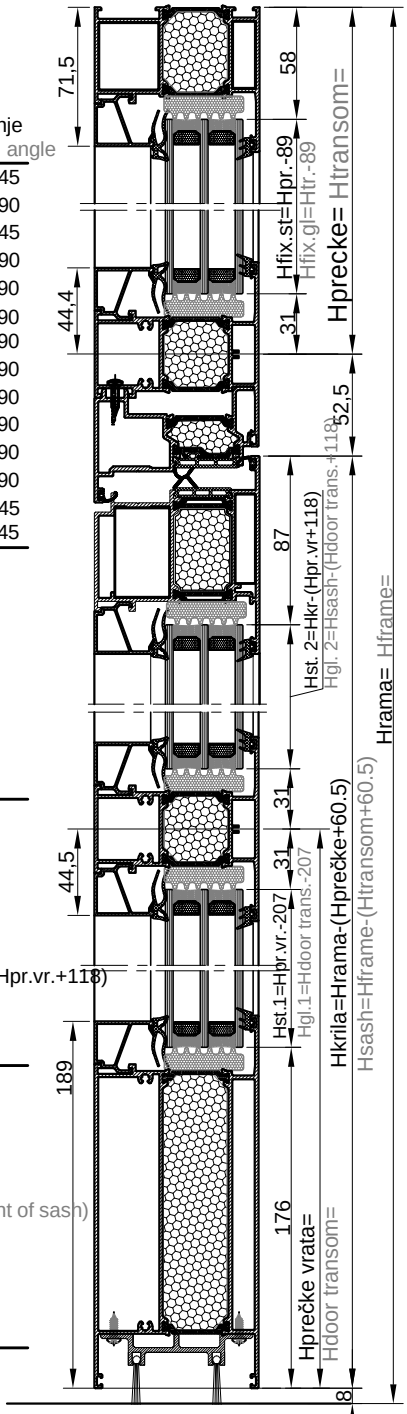


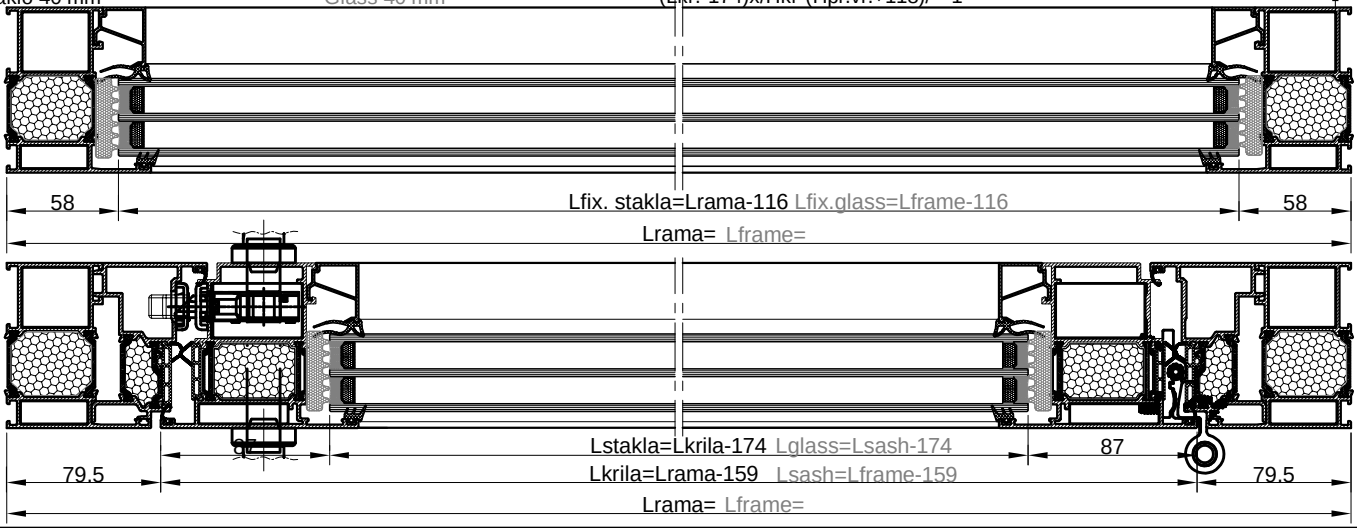


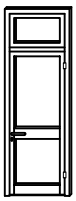




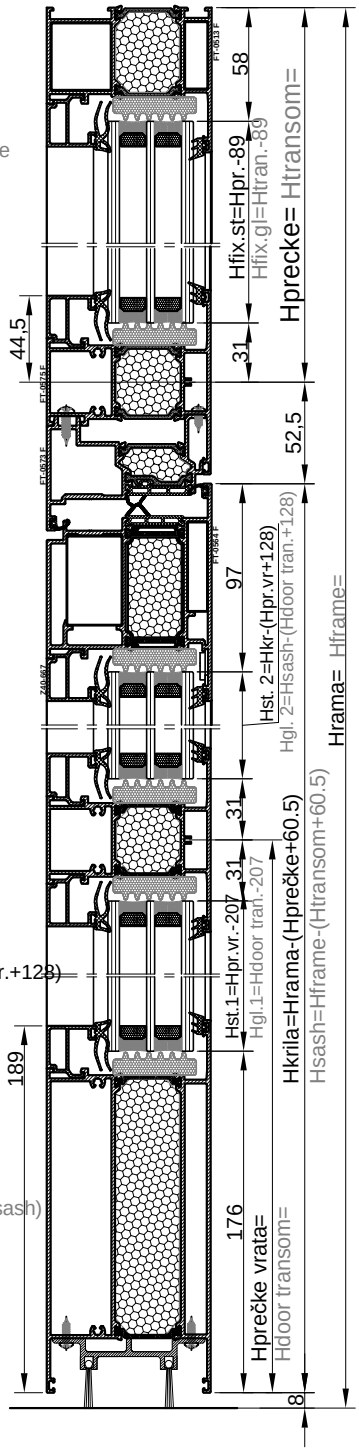
naziv name		mjera dimension	kom. pcs.	pilanje sawing angle
Ram FT-0513 F	Frame FT-0513 F	L	1	45-45
Ram FT-0513 F	Frame FT-0513 F	H	2	45-90
Krilo FT-0562 F	Sash FT-0562 F	L-159	1	45-45
Krilo FT-0562 F	Sash FT-0562 F	H-(Hpr.+60.5)	2	45-90
Prečka FT-0575 F	Transom FT-0575 F	L-87.5	1	90-90
Prečka na krilu FT-0575 F	Transom-in sash FT-0575 F	Lkr-147	1	90-90
Staklo lajsna Z40-668	Glazing bead Z40-668	L-99	2	90-90
Staklo lajsna Z40-668	Glazing bead Z40-668	Lkr-160	4	90-90
Staklo lajsna Z40-668	Glazing bead Z40-668	Hpr.-116	2	90-90
Staklo lajsna Z40-668	Glazing bead Z40-668	Hpr.vr.-233.5	2	90-90
Staklo lajsna Z40-668	Glazing bead Z40-668	H-(Hpr.+Hpr.vr.+207)	2	90-90
Parapetna prečka FT-0576 F	Tren.-bottom sash prof. FT-0576 F	Lkr-147	1	90-90
Umetak FT-0573 F	Additional profile FT-0573 F	L-87.5	1	45-45
Umetak FT-0573 F	Additional profile FT-0573 F	H-(Hpr+17)	2	90-45
Kutna spojnica 710.145	Corner bracket 710.145		2	
Kutna spojnica 710.133	Corner bracket 710.133		2	
Kutna spojnica 710.091	Corner bracket 710.091		2	
Kutna spojnica 710.134	Corner bracket 710.134		2	
Kutna spojnica 731.010	Corner bracket 731.010		2	
Kutna spojnica 730.001	Corner bracket 730.001		8	
Veznik prečke 710.066	T bracket 710.066		12	
Veznik prečke 710.079	T bracket 710.079		4	
Veznik prečke 710.171	T bracket 710.171		8	
Centralna brtva rama 338.009	Central gasket-frame 338.009	1Lkr+2Hkr		
Centralna brtva krila 338.010	Central gasket-sash 338.010	1Lkr+2Hkr		
Brtva prema staklu vanjska 328.003	Glazing gasket -external- 328.003	2Lrama+4Lkr+2Hpreč+2Hkr		
Brtva prema staklu unutarnja 311.004	Glazing gasket -internal- 311.004	2Lrama+4Lkr+2Hpreč+2Hkr		
Brtva na spoju rama i krila 317.002	Rebate gasket 317.002	2Lkr+4Hkr		
Izolacijski umetak 340.013	Underglass insulator 340.013	2(L-91.5)+2(Hpr.-89)		
Izolacijski umetak 340.013	Underglass insulator 340.013	4(Lkr.-150)+2(Hpr.vr.-207)+2/Hkr-(Hpr.vr.+118)		
Pvc umetak u parap. prečki 374.048	Pvc prof. for transom /bottom sash prof./374.048	Lkr-54	1	
Četkasta brtva 347.001	Brush seal 347.001		2	
Brava G-U Secury s MR2 (35) tri ključanja 122.016	Multipoint lock - G-U Secury MR2 (35) -122.016		1	
Prihvatna pločica 24x6x2 122.065	Striking plate 24x6x2 122.065		2	
Prihvatni lim 24x6 (desni) 122.063	Striking plate 24x6 (right) 122.063		1	
Trodijelna cilindrična šarka 112.012.01 - bijela	Barrel door hinge-3 part 112.012.01 - white	2 ili (3) po krilu ovisno o visini i tež.krila 2 or (3) per sash(dep. of height and weight of sash)		
Ručka za vrata 102.028	Door handle 102.028		2	
Četvrtka 102.025	Square spindle 102.025		1	
Cilindar (35-75) 122.095	Cylinder (35-75) 122.095		1	
Štitnik cilindra 122.098	Cylinder rosette 122.098		2	
Protuprovalni umetak 141.002	Security pin 141.002		2	
Staklo 40 mm	Glass 40 mm	(L-116)x(Hpr.-89)	1	
Staklo 40 mm	Glass 40 mm	(Lkr.-174)x(Hpr.vr.-207)	1	
Staklo 40 mm	Glass 40 mm	(Lkr.-174)x/Hkr-(Hpr.vr.+118)/	1	

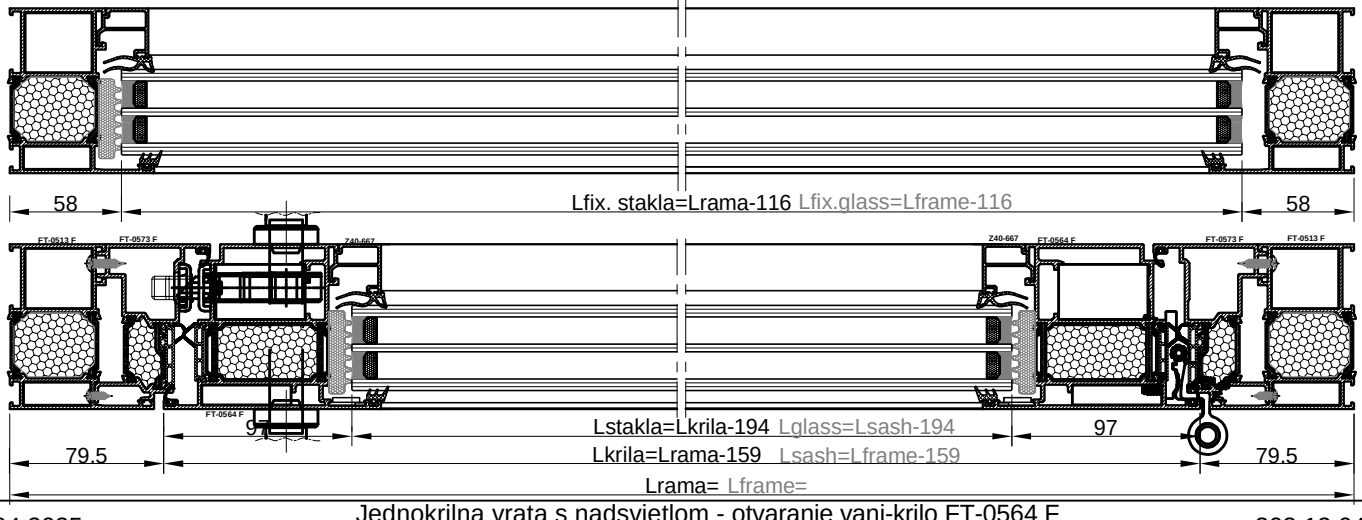






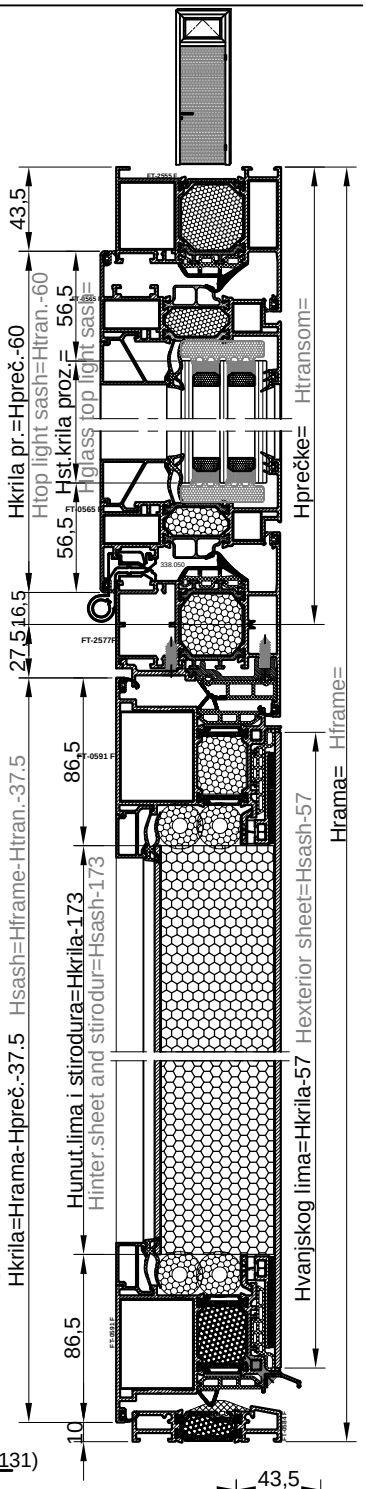
naziv name		mjera dimension	kom. pcs.	pilanje sawing angle
Ram FT-0513F	Frame FT-0513F	L	1	45-45
Ram FT-0513F	Frame FT-0513F	H	2	45-90
Krilo FT-0564F	Sash FT-0564F	L-159	1	45-45
Krilo FT-0564F	Sash FT-0564F	H-(Hpr.+60.5)	2	45-90
Prečka FT-0575F	Transom FT-0575F	L-87.5	1	90-90
Prečka na krilu FT-0575F	Transom-in sash FT-0575F	Lkr-167	1	90-90
Staklo lajsna Z40-667	Glazing bead Z40-667	L-99	2	90-90
Staklo lajsna Z40-667	Glazing bead Z40-667	Lkr-180	4	90-90
Staklo lajsna Z40-667	Glazing bead Z40-667	Hpr.-116	2	90-90
Staklo lajsna Z40-667	Glazing bead Z40-667	Hpr.vr.-233.5	2	90-90
Staklo lajsna Z40-667	Glazing bead Z40-667	H-(Hpr.+Hpr.vr.+217)	2	90-90
Parapetna prečka FT-0576F	Tran.-bottom sash prof. FT-0576F	Lkr-167	1	90-90
Umetak FT-0573F	Additional profile FT-0573F	L-87.5	1	45-45
Umetak FT-0573F	Additional profile FT-0573F	H-(Hpr+17)	2	90-45
Kutna spojnica 710.145	Corner bracket 710.145		2	
Kutna spojnica 710.133	Corner bracket 710.133		2	
Kutna spojnica 710.091	Corner bracket 710.091		2	
Kutna spojnica 710.134	Corner bracket 710.134		2	
Kutna spojnica 731.010	Corner bracket 731.010		2	
Kutna spojnica 730.001	Corner bracket 730.001		4	
Veznik prečke 710.066	T bracket 710.066		12	
Veznik prečke 710.079	T bracket 710.079		4	
Veznik prečke 710.171	T bracket 710.171		8	
Centralna brtva rama 338.009	Central gasket-frame 338.009	1Lkr+2Hkr		
Centralna brtva krila 338.010	Central gasket-sash 338.010	1Lkr+2Hkr		
Brtva prema staklu vanjska 328.003	Glazing gasket -external- 328.003	2Lrama+4Lkr+2Hpreč+2Hkr		
Brtva prema staklu unutarnja 311.004	Glazing gasket -internal- 311.004	2Lrama+4Lkr+2Hpreč+2Hkr		
Brtva na spoju rama i krila 317.002	Rebate gasket 317.002	2Lkr+4Hkr		
Izolacijski umetak 340.013	Underglass insulator 340.013	2(L-91.5)+2(Hpr.-89)		
Izolacijski umetak 340.013	Underglass insulator 340.013	4(Lkr.-170)+2(Hpr.vr.-207)+2/Hkr-(Hpr.vr.+128)		
Pvc umetak u parap. prečki 374.048	Pvc prof. for transom /bottom sash prof./ 374.048	Lkr-54	1	
Četkasta brtva 347.001	Brush seal 347.001	Lkr-54	2	
Brava G-U Secury s MR2 (45) tri ključanja 122.015	Multipoint lock - G-U Secury MR2 (45) -122.015		1	
Prihvatna pločica 24x6x2 122.065	Striking plate 24x6x2 122.065		2	
Prihvatni lim 24x6 (desni) 122.063	Striking plate 24x6 (right) 122.063		1	
Trodijelna cilindrična šarka 112.012.01 - bijela	Barrel door hinge-3 part 112.012.01 - white	2 ili (3) po krilu ovisno o visini i tež.krila 2 or (3) per sash(dep. of height and weight of sash)		
Ručka za vrata 102.028	Door handle 102.028		1	
Četvrtka 102.025	Square spindle 102.025		1	
Cilindar (35-75) 122.095	Cylinder (35-75) 122.095		1	
Štitnik cilindra 122.098	Cylinder rosette 122.098		2	
Protuprovalni umetak 141.002	Security pin 141.002		2	
Staklo 44 mm	Glass 44 mm	(L-116)x(Hpr.-89)	1	
Staklo 44 mm	Glass 44 mm	(Lkr.-194)x(Hpr.vr.-207)	1	
Staklo 44 mm	Glass 44 mm	(Lkr.-194)x/Hkr-(Hpr.vr.+128)/	1	

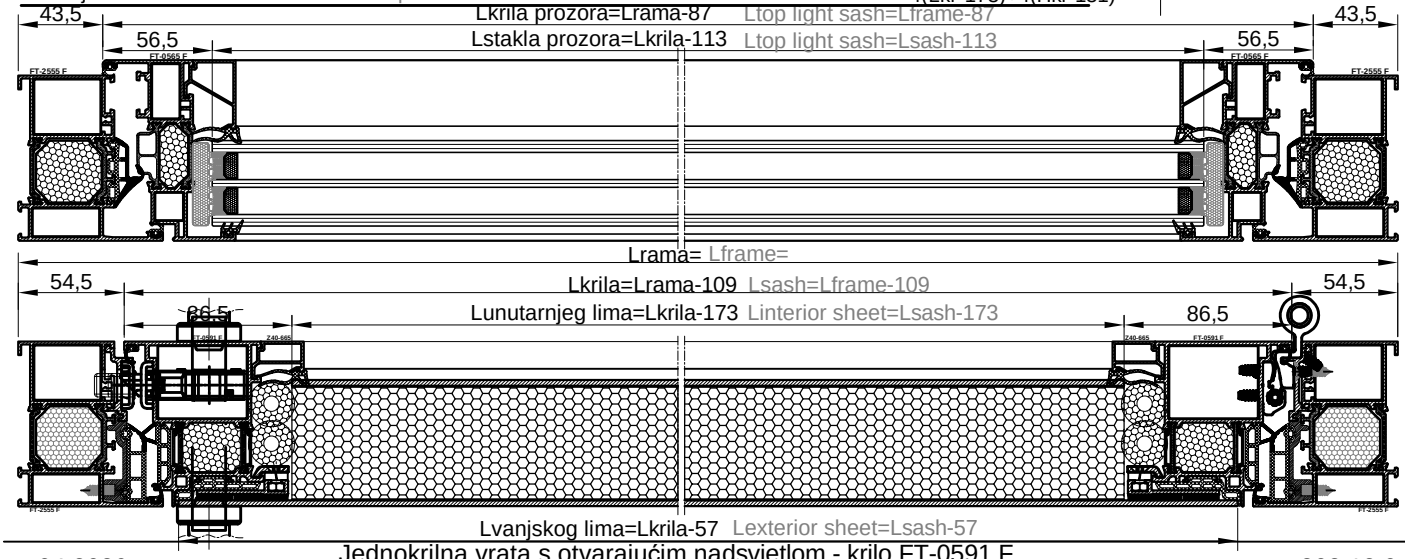




naziv name		mjera dimension	kom. pcs.	pilanje sawing angle
Ram FT-2555F	Frame FT-2555F	L	1	45-45
Ram FT-2555F	Frame FT-2555F	H	2	45-90
Krilo FT-0591F	Sash FT-0591F	L-109	2	45-45
Krilo FT-0591F	Sash FT-0591F	H-Hpreč.-37.5	2	45-45
Prag FT-0584F	Threshold FT-0584F	L-180	1	90-90
Prečka FT-2577F	Transom FT-2577F	L-89	1	90-90
Krilo prozora FT-0565F	Top light sash FT-0565F	L-87	2	45-45
Krilo prozora FT-0565F	Top light sash FT-0565F	Hpreč.-60	2	45-45
Al umetak F-1222	Additional profile F-1222	L-89	1	45-45
Al umetak F-1222	Additional profile F-1222	H-Hpreč.-17.5	2	45-90
Okapnica F-0970	Drip cap profile F-0970	Lkr-58	1	90-90
Al profil F-1093	Al profile F-1093	Lkr-76	2	45-45
Al profil F-1093	Al profile F-1093	Hkr-76	2	45-45
Staklo lajsna Z40-665	Glazing bead Z40-665	Lkrila-141	2	90-90
Staklo lajsna Z40-665	Glazing bead Z40-665	Hkr-185	2	90-90
Staklo lajsna Z40-669	Glazing bead Z40-669	Lkrila proz.-93	2	90-90
Staklo lajsna Z40-669	Glazing bead Z40-669	Hkrila proz.-137	2	90-90
Kutna spojnica 710.072	Corner bracket 710.072		2	
Kutna spojnica 710.173	Corner bracket 710.173		2	
Kutna spojnica 710.136	Corner bracket 710.136		4	
Kutna spojnica 710.015	Corner bracket 710.015		4	
Kutna spojnica 710.203	Corner bracket 710.203		4	
Kutna spojnica 730.001	Corner bracket 730.001		10	
Kutna spojnica 710.485	Corner bracket 710.485		4	
Kutna spojnica 710.458	Corner bracket 710.458		4	
Kopča 141.001	Panel clamp 141.001		(2Lkr+2Hkr)/250	
Centralna brtva rama 338.004	Central gasket-frame 338.004	1Lkr+2Hkr		
Centralna brtva krila 338.006	Central gasket-sash 338.006	3Lkr+4Hkr		
Brtva na spoju rama i krila 317.002	Rebate gasket 317.002	3Lkr+4Hkr		
Brtva 348.004	Gasket 348.004	2(Lkr-53)+2(Hkr-53)		
Brtva prema panelu unut. 311.003	Panel gasket-internal 311.003	2Lkr+2Hkr		
Brtva praga 331.012	Threshold gasket 331.012	L-180	1	90-90
Vanjska brtva krila 328.002	Glazing gasket-external 328.002	2Lkr. proz.+2Hkr.proz		
Unutarnja brtva krila 311.004	Glazing gasket-internal 311.004	2Lkr. proz.+2Hkr.proz		
Centralna brtva prozora 338.050	Central gasket-window 338.050	2Lkr. proz.+2Hkr.proz		
Čep okapnice F-0970 375.001	End cap for F-0970 375.001		1 par	
Umetak na pragu 363.103	End cap for threshold 363.103		1 par	
Umetak na ramu 374.043	Additional pvc profile 374.043	L-88	1	45-45
Umetak na ramu 374.043	Additional pvc profile 374.043	H-Hpreč.-17	2	45-90

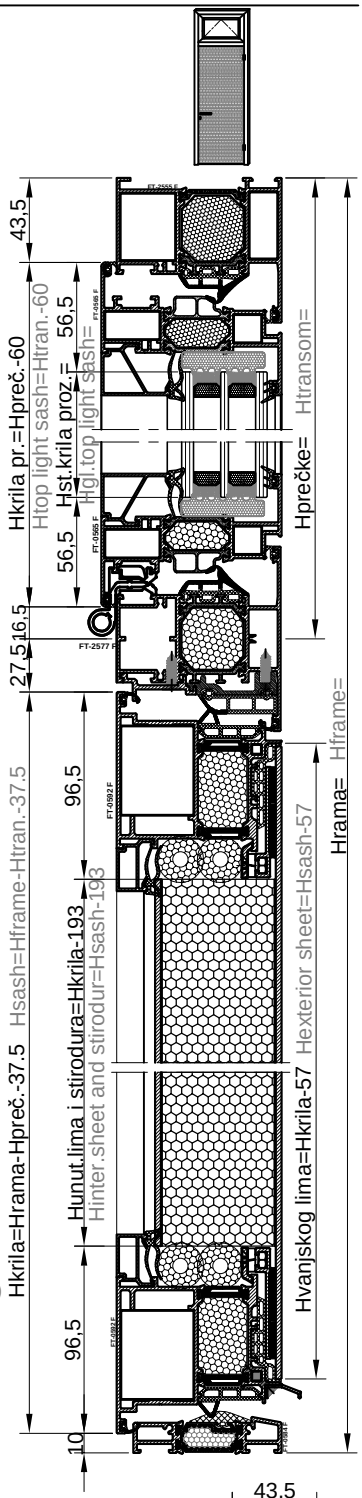
Brava G-U Secury s MR2 (35) tri ključanja 122.016	Multipoint lock - G-U Secury MR2 (35) -122.016		1
Prihvatna pločica 24x6x2 122.065	Striking plate 24x6x2 122.065		2
Prihvatni lim 24x6 (lijevi) 122.064	Striking plate 24x6 (left) 122.064		1
Trodijelna cilindrična šarka 112.011.01 - bijela	Barrel door hinge-3 part 112.011.01 - white	2 ili (3) po krilu ovisno o visini i tež.krila 2 or (3) per sash(dep. of height and weight of sash)	
Ručka za vrata 102.028	Door handle 102.028		2
Četvrtka 102.025	Square spindle 102.025		1
Cilindar (35-75) 122.095	Cylinder (35-75) 122.095		1
Štitnik cilindra 122.098	Cylinder rosette 122.098		2
Protuprovalni umetak 141.002	Security pin 141.002		2
Izolacijski umetak Ø25 340.035	Underpanel insulator Ø25 340.035		4(Lkr-173)+4(Hkr-131)

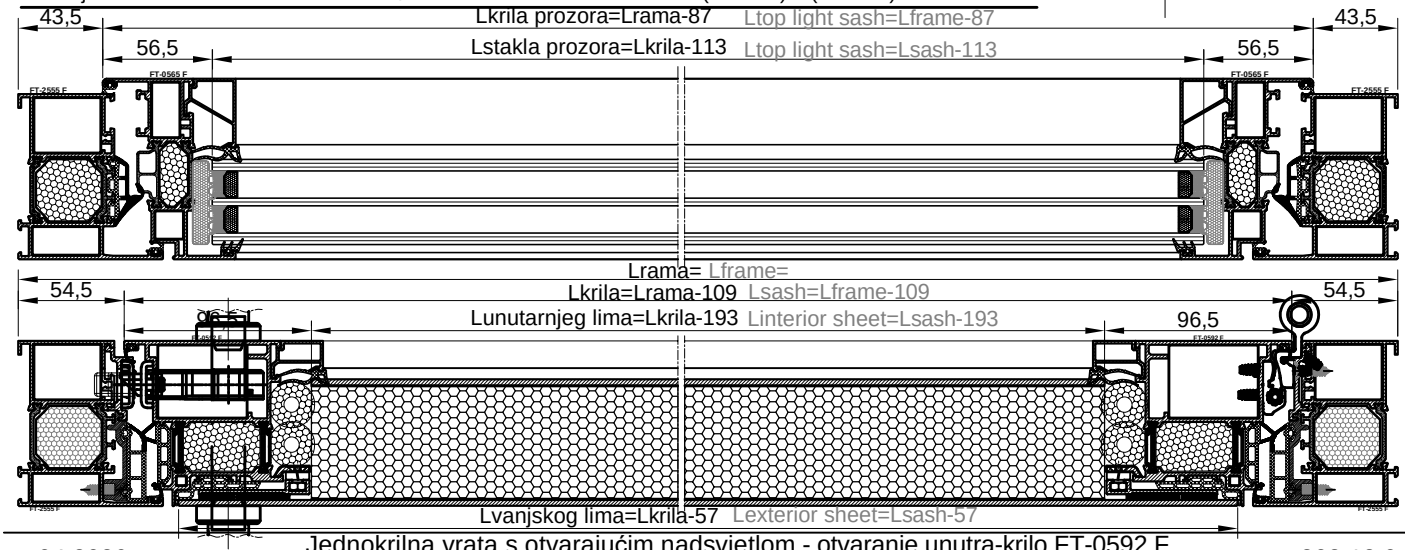




naziv name		mjera dimension	kom. pcs.	pilanje sawing angle
Ram FT-2555F	Frame FT-2555F	L	1	45-45
Ram FT-2555F	Frame FT-2555F	H	2	45-90
Krilo FT-0592F	Sash FT-0591F	L-109	2	45-45
Krilo FT-0592F	Sash FT-0591F	H-Hpreč.-37.5	2	45-45
Prag FT-0584F	Threshold FT-0584F	L-180	1	90-90
Prečka FT-2577F	Transom FT-2577F	L-89	1	90-90
Krilo prozora FT-0565F	Top light sash FT-0565F	L-87	2	45-45
Krilo prozora FT-0565F	Top light sash FT-0565F	Hpreč.-60	2	90-90
Al umetak F-1222	Additional profile F-1222	L-89	1	45-45
Al umetak F-1222	Additional profile F-1222	H-Hpreč.-17.5	2	45-90
Okapnica F-0970	Drip cap profile F-0970	Lkr-58	2	90-90
Al profil F-1205	Al profile F-1093	Lkr-76	2	45-45
Al profil F-1205	Al profile F-1093	Hkr-76	2	45-45
Staklo lajsna Z40-665	Glazing bead Z40-665	Lkr-161	2	90-90
Staklo lajsna Z40-665	Glazing bead Z40-665	Hkr-205	2	90-90
Staklo lajsna Z40-669	Glazing bead Z40-669	Lkrila proz.-93	2	90-90
Staklo lajsna Z40-669	Glazing bead Z40-669	Hkr.proz.-137	2	90-90
Kutna spojnica 710.072	Corner bracket 710.072		2	
Kutna spojnica 710.173	Corner bracket 710.173		2	
Kutna spojnica 710.136	Corner bracket 710.136		4	
Kutna spojnica 710.015	Corner bracket 710.015		4	
Kutna spojnica 710.203	Corner bracket 710.203		4	
Kutna spojnica 730.001	Corner bracket 730.001		10	
Kutna spojnica 710.485	Corner bracket 710.485		4	
Kutna spojnica 710.458	Corner bracket 710.458		4	
Kopča 141.001	Panel clamp 141.001		(2Lkr+2Hkr)/250	
Centralna brtva rama 338.004	Central gasket-frame 338.004	1Lkr+2Hkr		
Centralna brtva krila 338.006	Central gasket-sash 338.006	2Lkr+2Hkr		
Brtva na spoju rama i krila 317.002	Rebate gasket 317.002	3Lkr+4Hkr+4L+4Hpreč.		
Brtva 348.004	Gasket 348.004	2(Lkr-53)+2(Hkr-53)		
Brtva prema panelu unut. 311.003	Panel gasket-internal 311.003	2Lkr+2Hkr		
Brtva praga 331.012	Threshold gasket 331.012	L-180	1	90-90
Vanjska brtva krila 328.002	Glazing gasket-external 328.002	2L+2Hpreč.		
Unutarnja brtva krila 311.004	Glazing gasket-internal 311.004	2L+2Hpreč.		
Centralna brtva prozora 338.050	Central gasket-window 338.050	2L+2Hpreč.		
Čep okapnice F-0970 375.001	End cap for F-0970 375.001		1 par	
Umetak na pragu 363.103	End cap for threshold 363.103		1 par	
Umetak na ramu 374.043	Additional pvc profile 374.043	L-88	1	45-45
Umetak na ramu 374.043	Additional pvc profile 374.043	H-Hpreč.-17	2	45-90

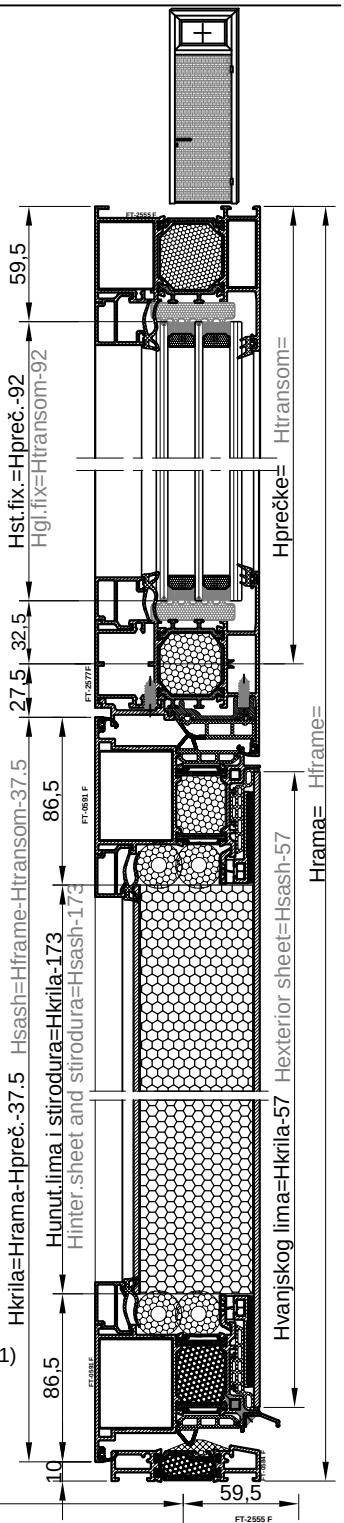
Brava G-U Secury s MR2 (45) tri ključanja 122.015	Multipoint lock - G-U Secury MR2 (45) -122.015		1
Prihvatna pločica 24x6x2 122.065	Striking plate 24x6x2 122.065		2
Prihvatni lim 24x6 (lijevi) 122.064	Striking plate 24x6 (left) 122.064		1
Trodijelna cilindrična šarka 112.011.01 - bijela	Barrel door hinge-3 part 112.011.01 - white	2 ili (3) po krilu ovisno o visini i tež.krila 2 or (3) per sash(dep. of height and weight of sash)	
Ručka za vrata 102.028	Door handle 102.028		2
Četvrtka 102.025	Square spindle 102.025		1
Cilindar (35-75) 122.095	Cylinder (35-75) 122.095		1
Štitnik cilindra 122.098	Cylinder rosette 122.098		2
Protuprovalni umetak 141.002	Security pin 141.002		2
Izolacijski umetak Ø25 340.035	Underpanel insulator Ø25 340.035	4(Lkr-193)+4(Hkr-151)	

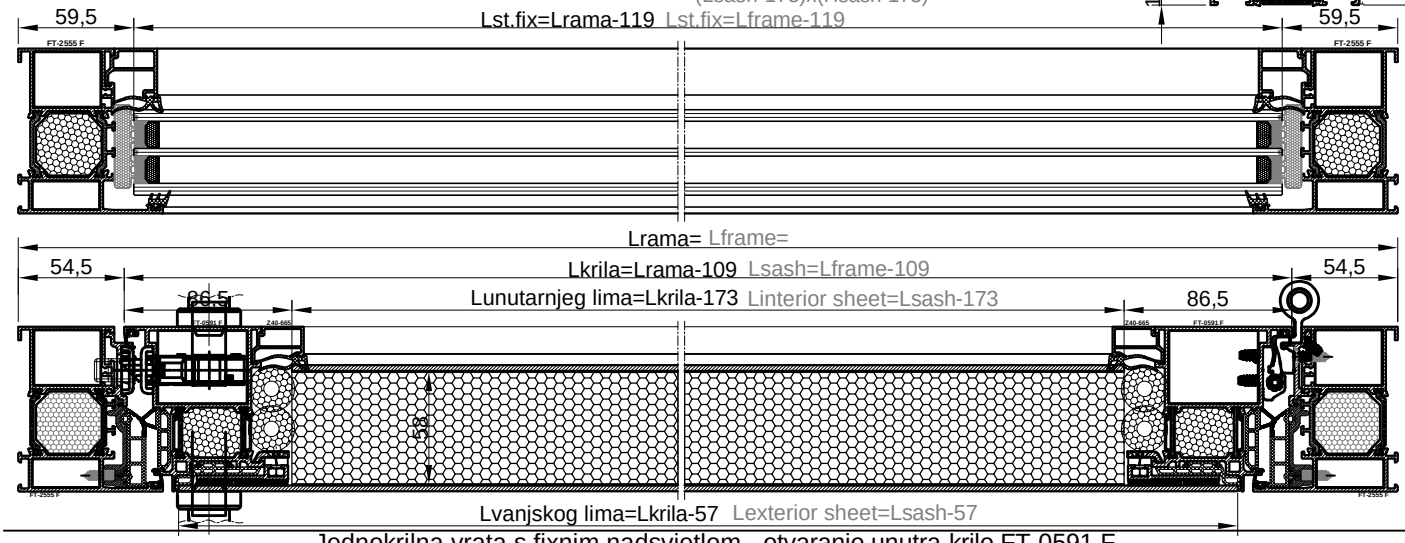




naziv name		mjera dimension	kom. pcs.	pilanje sawing angle
Ram FT-2555F	Frame FT-2555F	L	1	45-45
Ram FT-2555F	Frame FT-2555F	H	2	45-90
Krilo FT-0591F	Sash FT-0591F	L-109	2	45-45
Krilo FT-0591F	Sash FT-0591F	H-Hpreč.-37.5	2	45-45
Prag FT-0584F	Threshold FT-0584F	L-180	1	90-90
Prečka FT-2577F	Transom FT-2577F	L-89	1	90-90
Al umetak F-1222	Additional profile F-1222	L-89	1	45-45
Al umetak F-1222	Additional profile F-1222	H-Hpreč.-17.5	2	45-90
Okapnica F-0970	Drip cap profile F-0970	Lkr-58	1	90-90
Al profil F-1093	Al profile F-1093	Lkr-76	2	45-45
Al profil F-1093	Al profile F-1093	Hkr-76	2	45-45
Staklo lajsna Z40-665	Glazing bead Z40-665	Lkrila-141	2	90-90
Staklo lajsna Z40-665	Glazing bead Z40-665	Hkr-185	2	90-90
Staklo lajsna nadsv. Z40-667	Glazin bead-top light Z40-667	L-99	2	90-90
Staklo lajsna nadsv. Z40-667	Glazin bead-top light Z40-667	Hpreč.-116	2	90-90
Kutna spojnica 710.072	Corner bracket 710.072		2	
Kutna spojnica 710.173	Corner bracket 710.173		2	
Kutna spojnica 710.136	Corner bracket 710.136		4	
Kutna spojnica 710.015	Corner bracket 710.015		4	
Kutna spojnica 710.203	Corner bracket 710.203		4	
Kutna spojnica 730.001	Corner bracket 730.001		6	
Kopča 141.001	Panel clamp 141.001		(2Lkr+2Hkr)/250	
Centralna brtva rama 338.004	Central gasket-frame 338.004	1Lkr+2Hkr		
Centralna brtva krila 338.006	Central gasket-sash 338.006	3Lkr+4Hkr		
Brtva na spoju rama i krila 317.002	Rebate gasket 317.002	3Lkr+4Hkr		
Brtva 348.004	Gasket 348.004	2(Lkr-53)+2(Hkr-53)		
Brtva prema panelu unut. 311.003	Panel gasket-internal 311.003	2Lkr+2Hkr		
Brtva praga 331.012	Threshold gasket 331.012	L-180	1	90-90
Vanjska brtva krila 328.002	Glazing gasket-external 328.002	2L.+2Hkpreč.		
Unutarnja brtva krila 311.004	Glazing gasket-internal 311.004	2L.+2Hkpreč.		
Čep okapnice F-0970 375.001	End cap for F-0970 375.001		1 par	
Umetak na pragu 363.103	End cap for threshold 363.103		1 par	
Umetak na ramu 374.043	Add. pvc profile 374.043	L-88	1	45-45
Umetak na ramu 374.043	Add. pvc profile 374.043	H-Hpreč.-17	2	45-90

Brava G-U Secury s MR2 (35) tri ključanja 122.016	Multipoint lock - G-U Secury MR2 (35) -122.016		1
Prihvatna pločica 24x6x2 122.065	Striking plate 24x6x2 122.065		2
Prihvatni lim 24x6 (lijevi) 122.064	Striking plate 24x6 (left) 122.064		1
Trodijelna cilindrična šarka 112.011.01 - bijela	Barrel door hinge-3 part 112.011.01 - white	2 ili (3) po krilu ovisno o visini i tež.krila 2 or (3) per sash(dep. of height and weight of sash)	
Ručka za vrata 102.028	Door handle 102.028		2
Četvrtka 102.025	Square spindle 102.025		1
Cilindar (35-75) 122.095	Cylinder (35-75) 122.095		1
Štitnik cilindra 122.098	Cylinder rosette 122.098		2
Protuprovalni umetak 141.002	Security pin 141.002		2
Izolacijski umetak Ø25 340.035	Underpanel insulator Ø25 340.035		4(Lkr-173)+4(Hkr-131)
Vanjski lim panela 3 mm	Exterior sheet 3 mm	(Lkr.-57)x(Hkr.-57)	1
Unutarnji lim panela 3 mm	Interior sheet 3 mm	LkrxHkr	1
Stirodur (ispuna panela 58 mm)	Stirodur (panel 81.4 mm)	(Lkrila-173)x(Hkrila-173) (Lsash-173)x(Hsash-173)	1

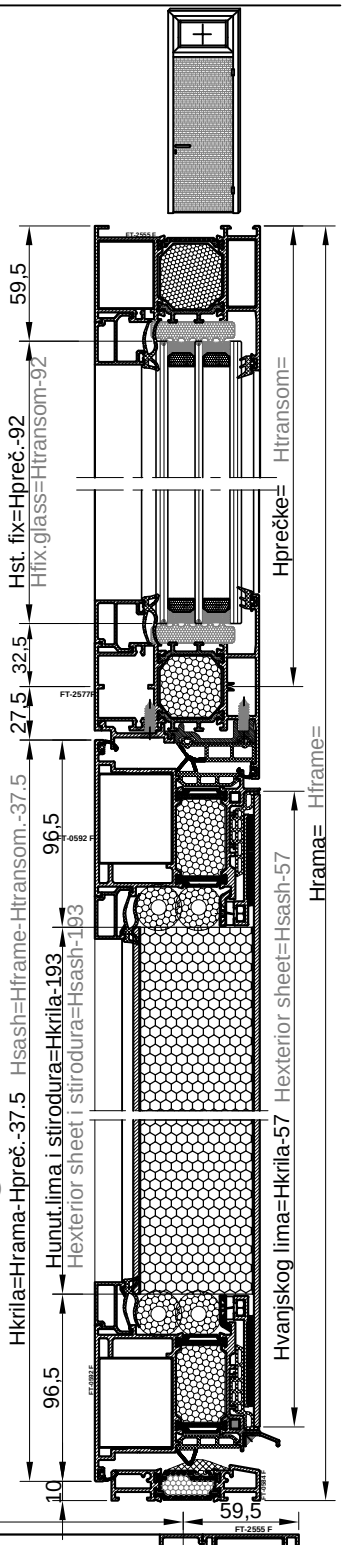


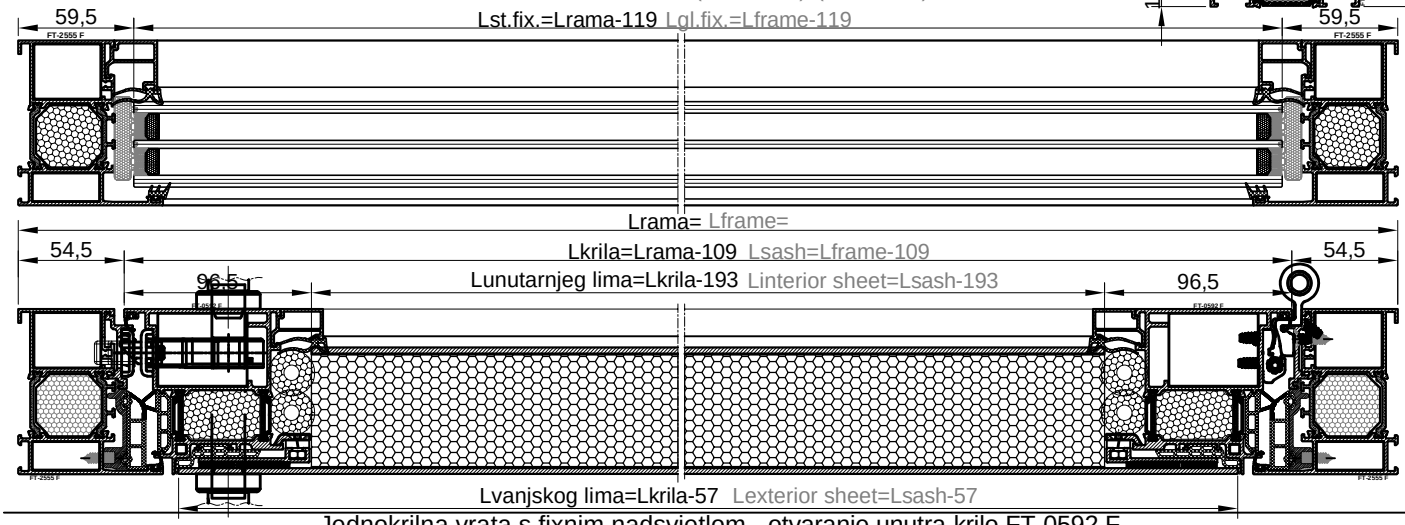


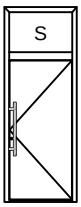
naziv name		mjera dimension	kom. pcs.	pilanje sawing angle
Ram FT-2555F	Frame FT-2555F	L	1	45-45
Ram FT-2555F	Frame FT-2555F	H	2	45-90
Krilo FT-0592F	Sash FT-0591F	L-109	2	45-45
Krilo FT-0592F	Sash FT-0591F	H-Hpreč.-37.5	2	45-45
Prag FT-0584F	Threshold FT-0584F	L-180	1	90-90
Prečka FT-2577F	Transom FT-2577F	L-89	1	90-90
Al umetak F-1222	Additional profile F-1222	L-89	1	45-45
Al umetak F-1222	Additional profile F-1222	H-Hpreč.-17.5	1	45-90
Okapnica F-0970	Drip cap profile F-0970	Lkr-58	1	90-90
Al profil F-1205	Al profile F-1205	Lkr-76	2	45-45
Al profil F-1205	Al profile F-1205	Hkr-76	2	45-45
Staklo lajsna Z40-665	Glazing bead Z40-665	Lkr-161	2	90-90
Staklo lajsna Z40-665	Glazing bead Z40-665	Hkr-205	2	90-90
Staklo lajsna Z40-667	Glazing bead Z40-667	L-99	2	90-90
Staklo lajsna Z40-667	Glazing bead Z40-667	Hpreč.-116	2	90-90
Kutna spojnica 710.072	Corner bracket 710.072		2	
Kutna spojnica 710.173	Corner bracket 710.173		2	
Kutna spojnica 710.136	Corner bracket 710.136		4	
Kutna spojnica 710.015	Corner bracket 710.015		4	
Kutna spojnica 710.203	Corner bracket 710.203		4	
Kutna spojnica 730.001	Corner bracket 730.001		6	
Kopča 141.001	Panel clamp 141.001		(2Lkr+2Hkr)/250	
Centralna brtva rama 338.004	Central gasket-frame 338.004	1Lkr+2Hkr		
Centralna brtva krila 338.006	Central gasket-sash 338.006	2Lkr+2Hkr		
Brtva na spoju rama i krila 317.002	Rebate gasket 317.002	3Lkr+4Hkr		
Brtva 348.004	Gasket 348.004	2(Lkr-53)+2(Hkr-53)		
Brtva prema panelu unut. 311.003	Panel gasket-internal 311.003	2Lkr+2Hkr		
Brtva praga 331.012	Threshold gasket 331.012	L-180	1	90-90
Vanjska brtva fix. 328.003	Glazing gasket-external 328.003	2L+2Hpreč.		
Unutarnja brtva fix. 311.004	Glazing gasket-external 311.004	2L+2Hpreč.		
Čep okapnice F-0970 375.001	End cap for F-0970 375.001		1 par	
Umetak na pragu 363.103	End cap for threshold 363.103		1 par	
Umetak na ramu 374.043	Additional pvc profile 374.043	L-88	1	45-45
Umetak na ramu 374.043	Additional pvc profile 374.043	H-Hpreč.-17	2	45-90

Brava G-U Secury s MR2 (45) tri ključanja 122.015	Multipoint lock - G-U Secury MR2 (45) -122.015		1
Prihvatna pločica 24x6x2 122.065	Striking plate 24x6x2 122.065		2
Prihvatni lim 24x6 (lijevi) 122.064	Striking plate 24x6 (left) 122.064		1
Trodijelna cilindrična šarka 112.011.01 - bijela	Barrel door hinge-3 part 112.011.01 - white	2 ili (3) po krilu ovisno o visini i tež.krila 2 or (3) per sash(dep. of height and weight of sash)	
Ručka za vrata 102.028	Door handle 102.028		2
Četvrtka 102.025	Square spindle 102.025		1
Cilindar (35-75) 122.095	Cylinder (35-75) 122.095		1
Štitnik cilindra 122.098	Cylinder rosette 122.098		2
Protuprovalni umetak 141.002	Security pin 141.002		2
Izolacijski umetak Ø25 340.035	Underpanel insulator Ø25 340.035	4(Lkr-173)+4(Hkr-131)	

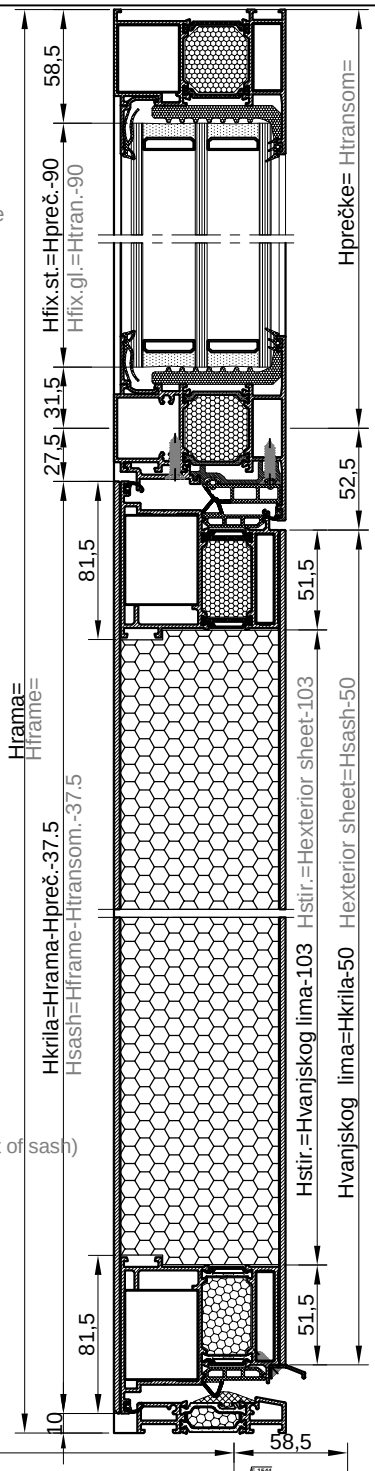
Vanjski lim panela 3 mm	Exterior sheet 3 mm	(Lkr.-57)x(Hkr.-57)	1
Unutarnji lim panela 3 mm	Interior sheet 3 mm	LkrxHkr	1
Stirodur (ispuna panela 58 mm)	Stirodur (panel 81.4 mm)	(Lkrila-193)x(Hkrila-193) (Lsash-193)x(Hsash-193)	1

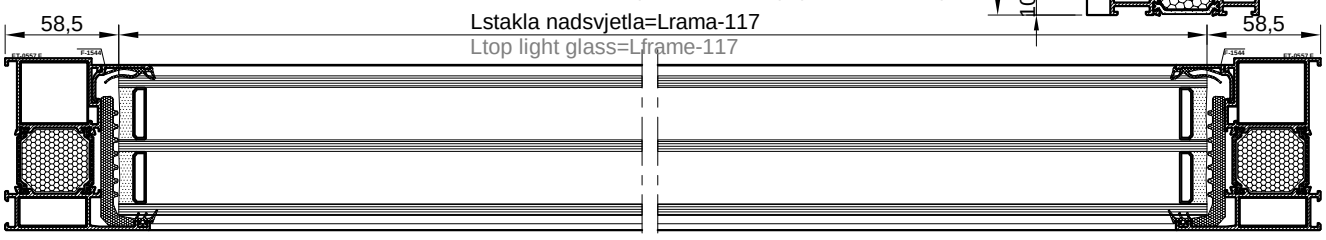


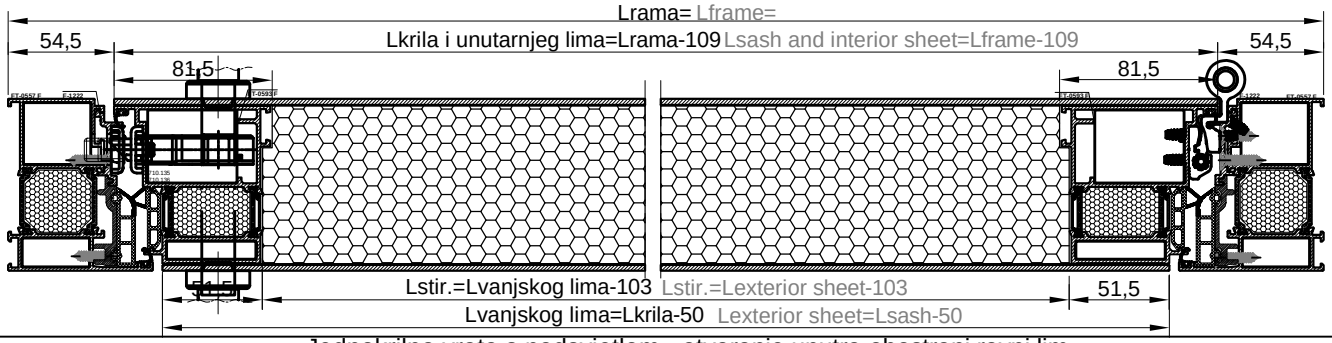




naziv name		mjera dimension	kom. pcs.	pilanje sawing angle
Ram FT-0557F	Frame FT-0557F	L	1	45-45
Ram FT-0557F	Frame FT-0557F	H	2	45-90
Krilo FT-0593F	Sash FT-0593F	L-109	2	45-45
Krilo FT-0593F	Sash FT-0593F	H-Hpreč.-37.5	2	45-45
Prag FT-0584F	Threshold FT-0584F	L-180	1	90-90
Prečka FT-0580F	Transom FT-0580F	L-89	1	90-90
Okapnica F-0970	Drip cap profile F-0970	Lkr-58	1	90-90
Al profil F-1222	Al profile F-1222	L-89	1	45-45
Al profil F-1222	Al profile F-1222	H-(Hpr.+17.5)	2	45-90
Staklo lajsna F-1544	Glazing bead F-1544	L-99	2	90-90
Staklo lajsna F-1544	Glazing bead F-1544	Hpreč.-122	2	90-90
Kutna spojnica 710.126	Corner bracket 710.126		2	
Kutna spojnica 710.173	Corner bracket 710.173		2	
Kutna spojnica 710.136	Corner bracket 710.136		4	
Kutna spojnica 710.169	Corner bracket 710.169		4	
Kutna spojnica 730.001	Corner bracket 730.001		6	
Centralna brtva rama 338.004	Central gasket-frame 338.004	1L+2H		
Centralna brtva krila 338.006	Central gasket-sash 338.006	2Lkr+2Hkr		
Brtva na spoju rama i krila 317.002	Rebate gasket 317.002	3Lkr+4Hkr		
Brtva praga 331.012	Threshold gasket 331.012	L-180	1	90-90
Vanjska brtva fix. 328.002	Glazing gasket-external 328.002	2L+2Hpreč		
Unutarnja brtva fix. 311.003	Glazing gasket-internal 311.003	2L+2Hpreč		
Čep okapnice F-0970 375.001	End cap for F-0970 375.001		1 par	
Umetak na pragu 363.103	End cap for threshold 363.103		1 par	
Umetak na ramu 374.043	Add. pvc profile 374.043	L-88	1	45-45
Umetak na ramu 374.043	Add. pvc profile 374.043	H-(Hpr+17)	2	45-90
Brava G-U Secury s MR2 (45) tri ključanja 122.015	Multipoint lock - G-U Secury MR2 (45) -122.015		1	
Prihvatna pločica 24x6x2 122.065	Striking plate 24x6x2 122.065		2	
Prihvatni lim 24x6 (lijevi) 122.064	Striking plate 24x6 (left) 122.064		1	
Trodijelna cilindrična šarka 112.011.01 - bijela	Barrel door hinge-3 part 112.011.01 - white	2 ili (3) po krilu ovisno o visini i tež.krila 2 or (3) per sash(dep. of height and weight of sash)		
Ručka za vrata 102.028	Door handle 102.028		2	
Četvrtka 102.025	Square spindle 102.025		1	
Cilindar (35-75) 122.095	Cylinder (35-75) 122.095		1	
Štitnik cilindra 122.098	Cylinder rosette 122.098		2	
Protuprovalni umetak 141.002	Security pin 141.002		2	
Vanjski lim panela 3 mm	Exterior sheet 3 mm	(Lkr.-50)x(Hkr.-50)	1	
Unutarnji lim panela 3 mm	Interior sheet 3 mm	LkrxHkr	1	
Stirodur (ispuna panela 81.4 mm)	Stirodur (panel 81.4 mm)	(Lvanj.lima-103)x(Hvanj.lima-103) (Lext.sheet-103)x(Hext.sheet-103)	1	



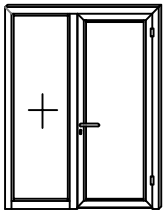


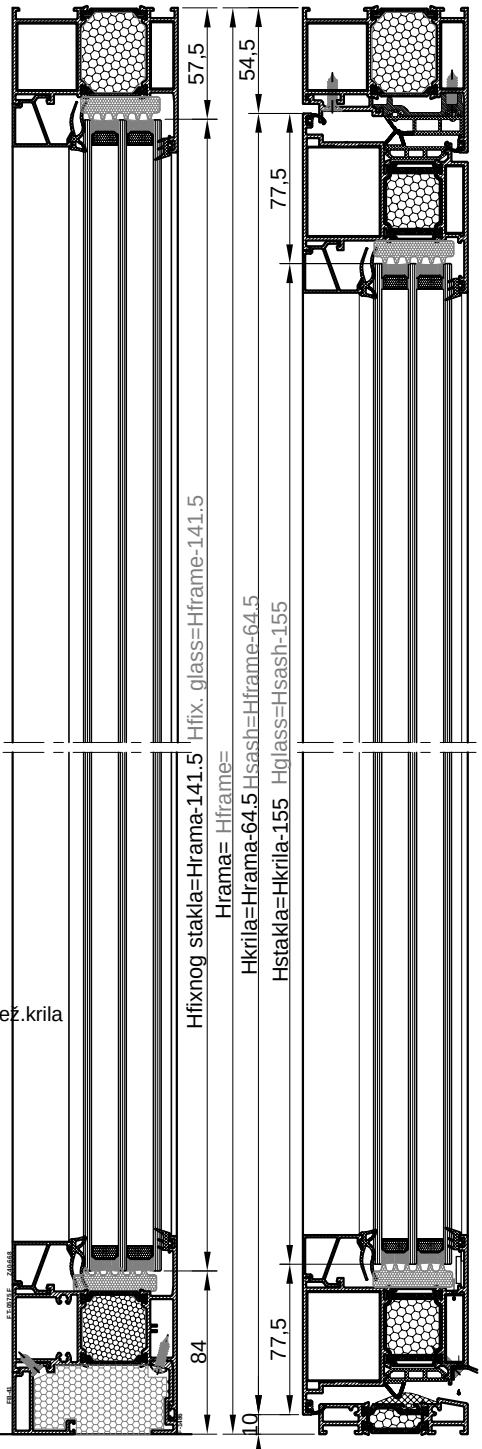


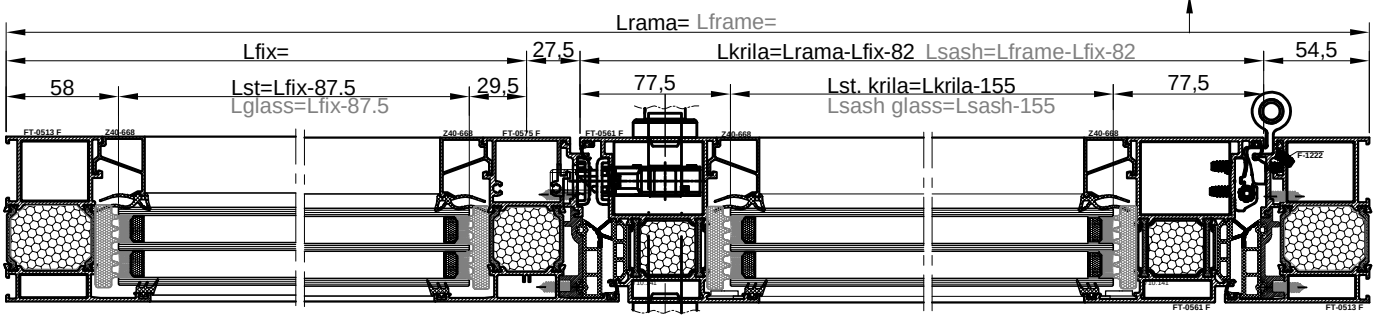
Jednokrilna vrata s bočnim fiksnim poljem

Single-leaf door with side fixed field

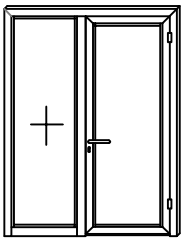
naziv name		mjera dimension	kom. pcs.	pilanje sawing angle
Ram FT-0513F	Frame FT-0513F	L	1	45-45
Ram FT-0513F	Frame FT-0513F	H	2	45-90
Krilo FT-0561F	Sash FT-0561F	L-Lfix-82	2	45-45
Krilo FT-0561F	Sash FT-0561F	H-64.5	2	45-45
Prag FT-0584F	Threshold FT-0584F	L-Lfix-153	1	90-90
Staklo lajsna Z40-668	Glazing bead Z40-668	Lfix-72	2	90-90
Staklo lajsna Z40-668	Glazing bead Z40-668	Lkr-141	2	90-90
Staklo lajsna Z40-668	Glazing bead Z40-668	H-170.5	2	90-90
Staklo lajsna Z40-668	Glazing bead Z40-668	Hkr-185	2	90-90
Prečka FT-0575F	Transom FT-0575F	H-44	1	90-90
Prečka na parap. FT-0575F	Tran.-bottom frame prof.FT-0575F	Lfix-60.5	1	90-90
Umetak rama F-1222	Additional profile F-1222	L-Lfix-62	1	45-45
Umetak rama F-1222	Additional profile F-1222	H-44.5	2	45-90
Umetak FB-41	Additional profile FB-41	Lfix-72	1	90-90
Umetak F-1486	Additional profile F-1486	Lfix-122	1	90-90
Okapnica F-0970	Drip cap profile F-0970	Lkr-58	1	90-90
Kutna spojnica 710.145	Corner bracket 710.145		2	
Kutna spojnica 710.141	Corner bracket 710.141		4	
Kutna spojnica 710.136	Corner bracket 710.136		4	
Kutna spojnica 731.010	Corner bracket 731.010		4	
Kutna spojnica 710.091	Corner bracket 710.091		2	
Veznik prečke 710.066	T bracket 710.066		6	
Veznik prečke 710.079	T bracket 710.079		6	
Kutna spojnica 730.001	Corner bracket 730.001		10	
Centralna brtva rama 338.004	Central gasket-frame 338.004	1Lkr+2Hkr		
Centralna brtva krila 338.006	Central gasket-sash 338.006	2Lkr+2Hkr		
Brtva 317.002	Rebate gasket 317.002	3Lkr+4Hkr		
Brtva prema staklu vanj. 328.003	Glazing gasket -external-328.003	2Lfix+2H+2Lkr+2Hkr		
Brtva prema staklu unut. 311.004	Glazing gasket -internal- 311.004	2Lfix+2H+2Lkr+2Hkr		
Brtva praga 331.012	Threshold gasket 331.012	L-Lfix-153	1	90-90
Izolacijski umetak 340.013	Underglass insulator 340.013	2(Lkr-131)+2(Hkr-155)		
Izolacijski umetak 340.013	Underglass insulator 340.013	2(L-91.5)+2(Hpr.-89)		
Čep okapnice F-0970 375.001	End cap for F-0970 375.001		1 par	
Umetak na pragu 363.103	End cap for threshold 363.103		1 par	
Umetak na ramu 374.043	Additional pvc profile 374.043	L-Lfix-61	1	45-45
Umetak na ramu 374.043	Additional pvc profile 374.043	H-44	2	45-90
Brava G-U Secury s MR2 (35) tri ključanja 122.016	Multipoint lock - G-U Secury MR2 (35) -122.016		1	
Prihvatna pločica 24x6x2 122.065	Striking plate 24x6x2 122.065		2	
Prihvatni lim 24x6 (Lijevi) 122.064	Striking plate 24x6 (Left) 122.064		1	
Trodijelna cilindrična šarka 112.011.01 - bijela	Barrel door hinge 112.011.01 - white	2 ili (3) po krilu ovisno o visini i tež.krila 2 or (3) per sash(dep. of height and weight of sash)		
Ručka za vrata 102.028	Door handle 102.028		2	
Četvrtka 102.025	Square spindle 102.025		1	
Cilindar (75+35) 122.095	Cylinder (75+35) 122.095		1	
Štitnik cilindra 122.098	Cylinder rosette 122.098		2	
Protuprovalni umetak 141.002	Security pin 141.002		2	
Staklo 40 mm	Glass 40 mm	(Lfix-87.5)x(H-141.5)	1	
Staklo 40 mm	Glass 40 mm	(Lkr.-155)x(Hkr.-155)	1	

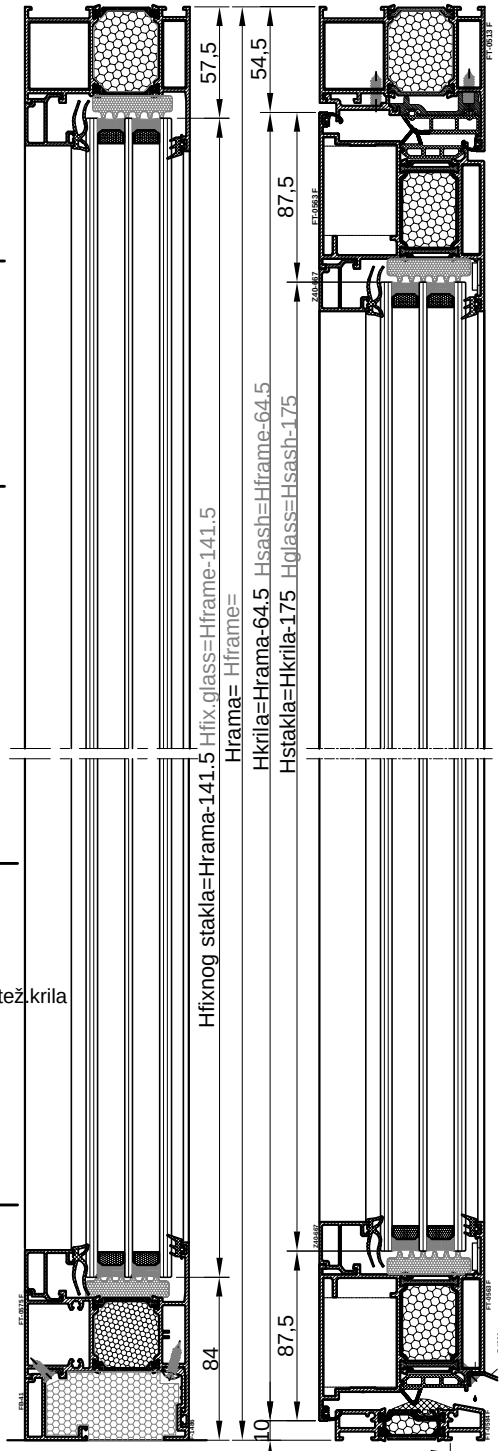


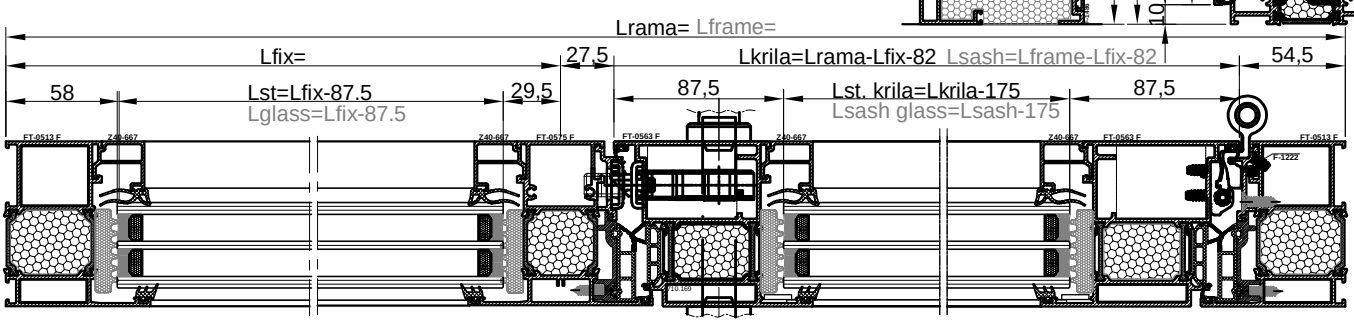


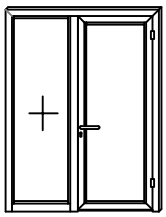


naziv name		mjera dimension	kom. pcs.	pilanje sawing angle
Ram FT-0513F	Frame FT-0513F	L	1	45-45
Ram FT-0513F	Frame FT-0513F	H	2	45-90
Krilo FT-0563F	Sash FT-0561F	L-Lfix-82	2	45-45
Krilo FT-0563F	Sash FT-0561F	H-64.5	2	45-45
Prag FT-0584F	Threshold FT-0584F	L-Lfix-153	1	90-90
Staklo lajsna Z40-667	Glazing bead Z40-667	Lfix-72	2	90-90
Staklo lajsna Z40-667	Glazing bead Z40-667	Lkr-161	2	90-90
Staklo lajsna Z40-667	Glazing bead Z40-667	H-170.5	2	90-90
Staklo lajsna Z40-667	Glazing bead Z40-667	Hkr-205	2	90-90
Prečka FT-0575F	Transom FT-0575F	H-44	1	90-90
Prečka na parap. FT-0575F	Tran.-bottom frame prof.FT-0575F	Lfix-60.5	1	90-90
Umetak rama F-1222	Additional profile F-1222	L-Lfix-62	1	45-45
Umetak rama F-1222	Additional profile F-1222	H-44.5	2	45-90
Umetak FB-41	Additional profile FB-41	Lfix-72	1	90-90
Umetak F-1486	Additional profile F-1486	Lfix-122	1	90-90
Okapnica F-0970	Drip cap profile F-0970	Lkr-58	1	90-90
Kutna spojnica 710.145	Corner bracket 710.145		2	
Kutna spojnica 710.169	Corner bracket 710.169		4	
Kutna spojnica 710.136	Corner bracket 710.136		4	
Kutna spojnica 731.010	Corner bracket 731.010		4	
Kutna spojnica 710.091	Corner bracket 710.091		2	
Veznik prečke 710.066	T bracket 710.066		6	
Veznik prečke 710.079	T bracket 710.079		6	
Kutna spojnica 730.001	Corner bracket 730.001		10	
Centralna brtva rama 338.004	Central gasket-frame 338.004	1Lkr+2Hkr		
Centralna brtva krila 338.006	Central gasket-sash 338.006	2Lkr+2Hkr		
Brtva 317.002	Rebate gasket 317.002	3Lkr+4Hkr		
Brtva prema staklu vanj. 328.003	Glazing gasket -ext.- 328.003	2Lfix+2H+2Lkr+2Hkr		
Brtva prema staklu unut. 311.004	Glazing gasket -internal- 311.004	2Lfix+2H+2Lkr+2Hkr		
Brtva praga 331.012	Threshold gasket 331.012	L-Lfix-153	1	90-90
Izolacijski umetak 340.013	Underglass insulator 340.013	2(Lkr-151)+2(Hkr-175)		
Izolacijski umetak 340.013	Underglass insulator 340.013	2(L-91.5)+2(Hpr.-89)		
Čep okapnice F-0970 375.001	End cap for F-0970 375.001		1 par	
Umetak na pragu 363.103	End cap for threshold 363.103		1 par	
Umetak na ramu 374.043	Additional pvc profile 374.043	L-Lfix-61	1	45-45
Umetak na ramu 374.043	Additional pvc profile 374.043	H-44	2	45-90
Brava G-U Secury s MR2 (45) tri ključanja 122.015	Multipoint lock - G-U Secury MR2 (45) -122.015		1	
Prihvatna pločica 24x6x2 122.065	Striking plate 24x6x2 122.065		2	
Prihvatni lim 24x6 (Lijevi) 122.064	Striking plate 24x6 (Left) 122.064		1	
Trodijelna cilindrična šarka 112.011.01 - bijela	Barrel door hinge-3 part 112.011.01 - white	2 ili (3) po krilu ovisno o visini i tež.krila 2 or (3) per sash(dep. of height and weight of sash)		
Ručka za vrata 102.028	Door handle 102.028		2	
Cilindar (75+35) 122.095	Cylinder (75+35) 122.095		1	
Štitnik cilindra 122.098	Cylinder rosette 122.098		2	
Protuprovalni umetak 141.002	Security pin 141.002		2	
Četvrtka 102.025	Square spindle 102.025		1	
Staklo 44 mm	Glass 44 mm	(Lfix-87.5)x(H-141.5)	1	
Staklo 44 mm	Glass 44 mm	(Lkr.-175)x(Hkr.-175)	1	

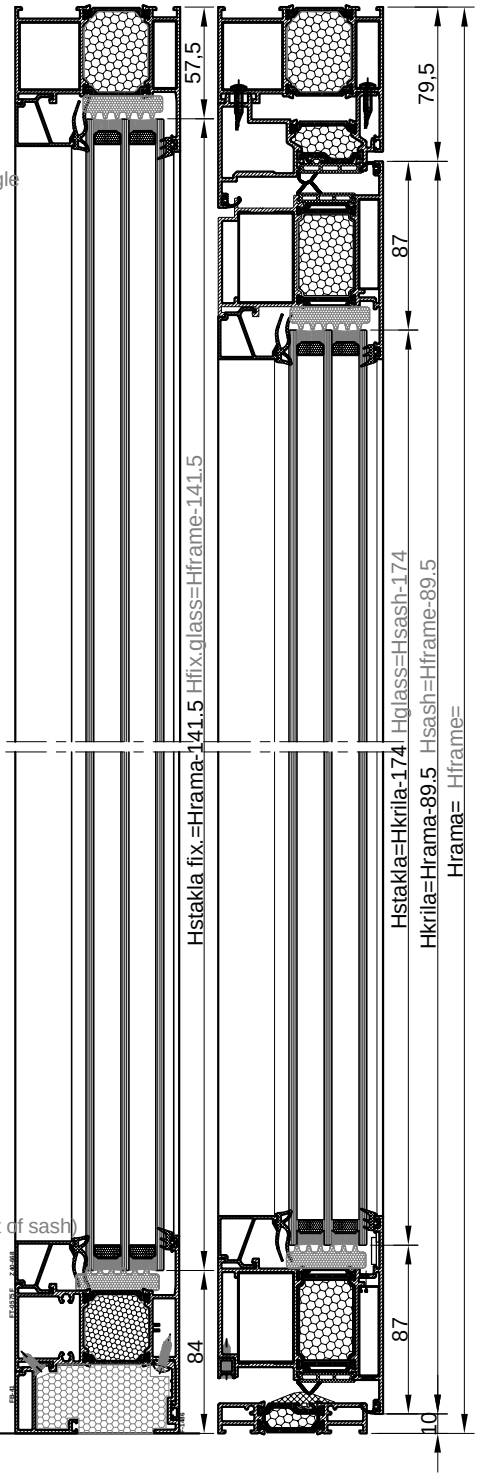


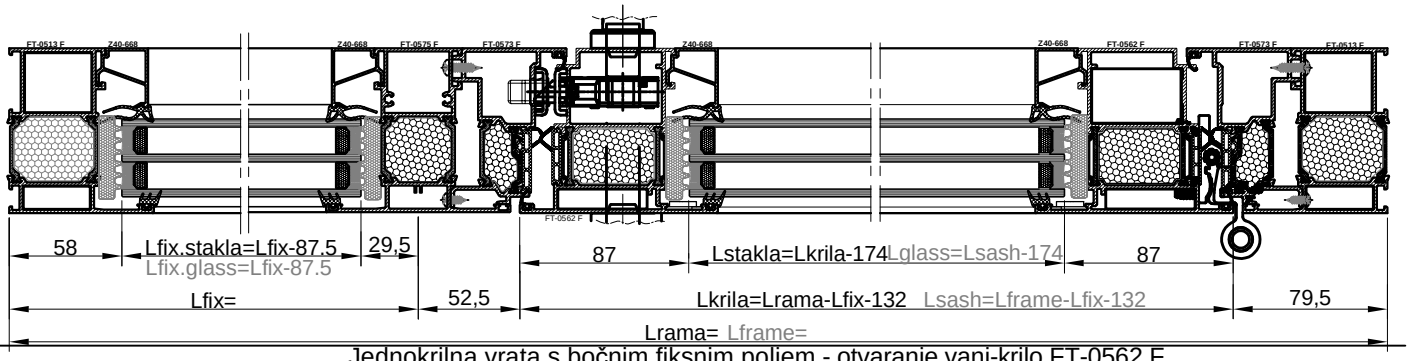


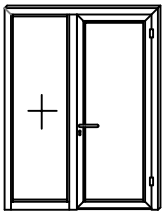




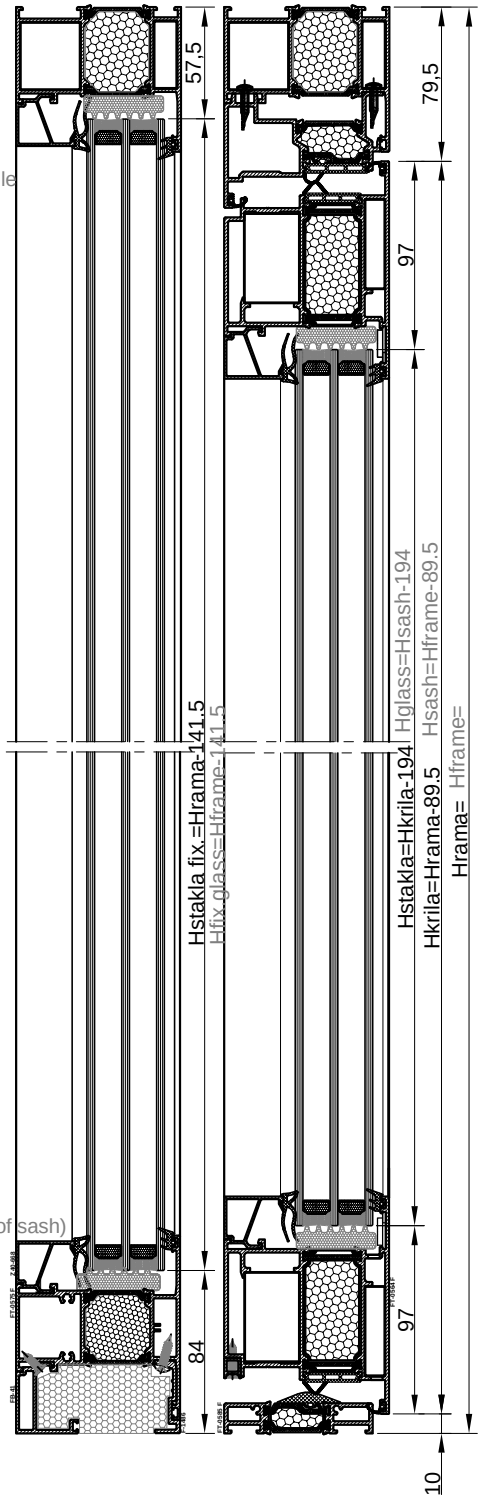
naziv name		mjera dimension	kom. pcs.	pilanje sawing angle
Ram FT-0513F	Frame FT-0513F	L	1	45-45
Ram FT-0513F	Frame FT-0513F	H	2	45-90
Krilo FT-0562F	Sash FT-0562F	L-Lfix-132	2	45-45
Krilo FT-0562F	Sash FT-0562F	H-89.5	2	45-45
Prečka FT-0575F	Transom FT-0575F	H-44	1	90-90
Parapetna prečka FT-0575F	Tran.-bottom frame prof. FT-0575F	Lfix-60.5	1	90-90
Prag FT-0585F	Threshold FT-0585F	L-Lfix-190	1	90-90
Staklo lajsna Z40-668	Glazing bead Z40-668	Lkr-160	2	90-90
Staklo lajsna Z40-668	Glazing bead Z40-668	Lfix-72	2	90-90
Staklo lajsna Z40-668	Glazing bead Z40-668	Hkr-204	2	90-90
Staklo lajsna Z40-668	Glazing bead Z40-668	H-170.5	2	90-90
Umetak FT-0573F	Additional profile FT-0573F	L-Lfix-60.5	1	45-45
Umetak FT-0573F	Additional profile FT-0573F	H-44	2	45-90
Umetak FB-41	Additional profile FB-41	Lfix-72	1	90-90
Umetak F-1486	Additional profile F-1486	Lfix-122	1	90-90
Kutna spojnica 710.145	Corner bracket 710.145		2	
Kutna spojnica 710.133	Corner bracket 710.133		4	
Kutna spojnica 710.091	Corner bracket 710.091		2	
Kutna spojnica 710.134	Corner bracket 710.134		4	
Kutna spojnica 731.010	Corner bracket 731.010		4	
Kutna spojnica 730.001	Corner bracket 730.001		6	
Veznik prečke 710.066	T bracket 710.066		6	
Veznik prečke 710.079	T bracket 710.079		6	
Cent. brtva rama 338.009	Central gasket-frame 338.009	1Lkr+2Hkr		
Cent. brtva krila 338.010	Central gasket-sash 338.010	2Lkr+2Hkr		
Brtva prema st. vanj. 328.003	Glazing gasket -ext.- 328.003	2Lkr+2Hkr+2Lfix+2H		
Brtva prema st. unut. 311.004	Glazing gasket -int.- 311.004	2Lkr+2Hkr+2Lfix+2H		
Brtva 317.002	Rebate gasket 317.002	3Lkr+4Hkr		
Brtva praga 331.012	Threshold gasket 331.012	L-Lfix-190	1	
Izolacijski umetak 340.013	Underglass insulator 340.013	2(Lkr-150)+2(Hkr-174)		
Izolacijski umetak 340.013	Underglass insulator 340.013	2(Lfix-66)+2(H-141.5)		
Umetak na pragu 373.020	End cap for threshold 373.020		1 par	
Brava G-U Secury s MR2 (35) tri ključanja 122.016	Multipoint lock - G-U Secury MR2 (35) -122.016		1	
Prihvatna pločica 24x6x2 122.065	Striking plate 24x6x2 122.065		2	
Prihvatni lim 24x6 (Desni) 122.063	Striking plate 24x6 (right) 122.063		1	
Trodijelna cilindrična šarka 112.012.01 - bijela	Barrel door hinge-3 part 112.012.01 - white	2 ili (3) po krilu ovisno o visini i tež.krila 2 or (3) per sash(dep. of height and weight of sash)		
Ručka za vrata 102.028	Door handle 102.028		2	
Cilindar (75+35) 122.095	Cylinder (75+35) 122.095		1	
Štitnik cilindra 122.098	Cylinder rosette 122.098		2	
Protuprovalni umetak 141.002	Security pin 141.002		2	
Četvrtka 102.025	Square spindle 102.025		1	
Staklo 40 mm	Glass 40 mm	(Lfix-87.5)x(H-141.5)	1	
Staklo 40 mm	Glass 40 mm	(Lkr.-174)x(Hkr-174)	1	

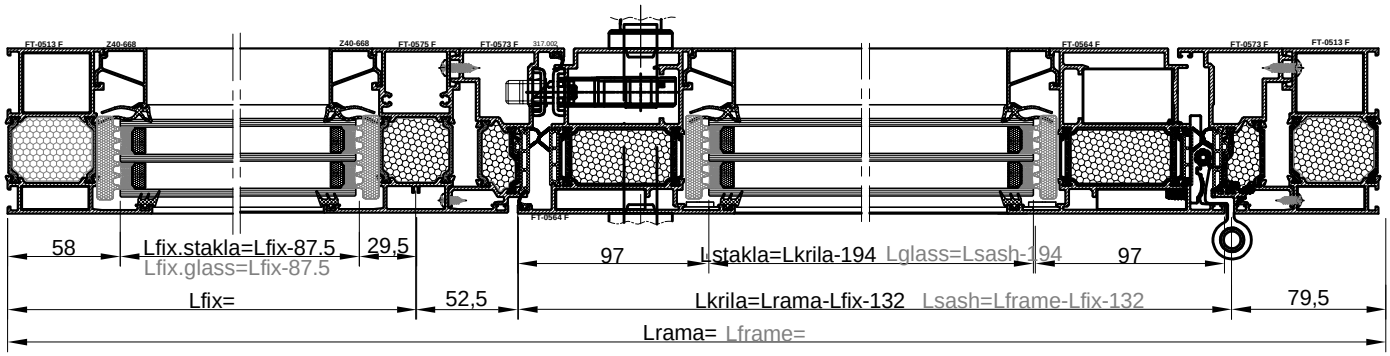


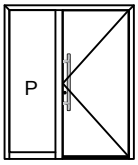




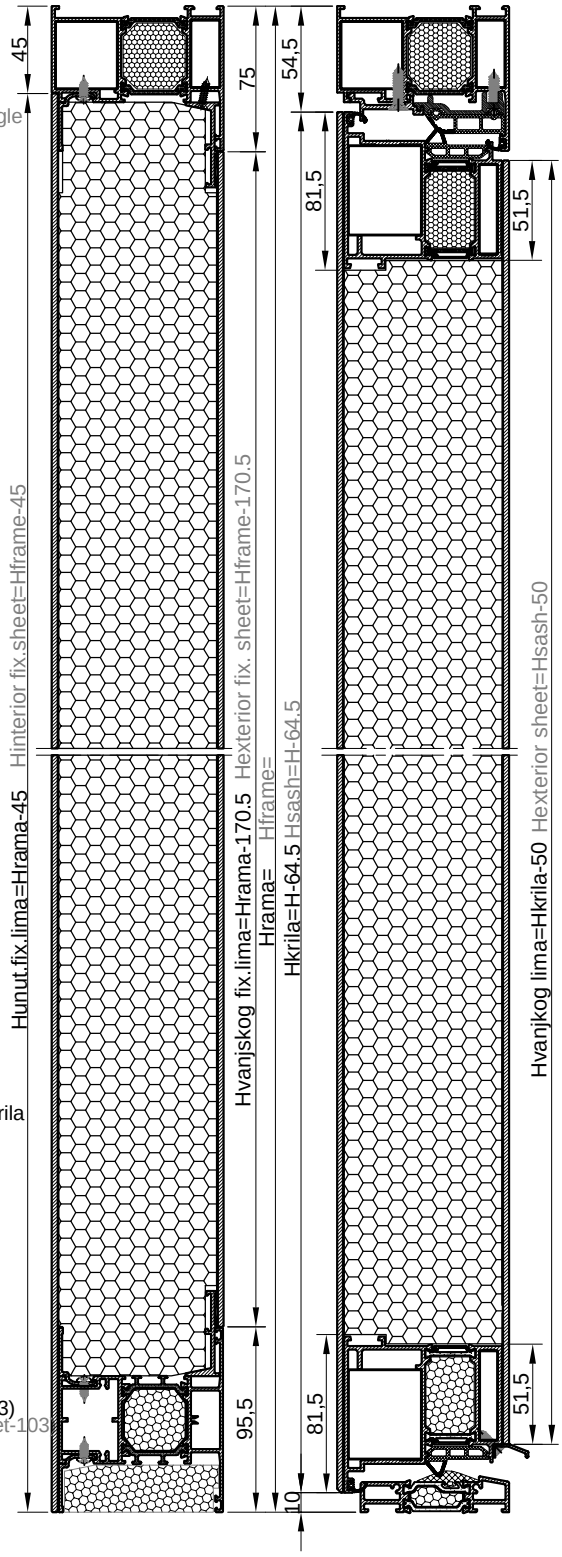
naziv name		mjera dimension	kom. pcs.	pilanje sawing angle
Ram FT-0513F	Frame FT-0513F	L	1	45-45
Ram FT-0513F	Frame FT-0513F	H	2	45-90
Krilo FT-0564F	Sash FT-0564F	L-Lfix-132	2	45-45
Krilo FT-0564F	Sash FT-0564F	H-89.5	2	45-45
Prečka FT-0575F	Transom FT-0575F	H-44	1	90-90
Parapetna prečka FT-0575F	Tran.-bottom frame prof.FT-0575F	Lfix-60.5	1	90-90
Prag FT-0585F	Threshold FT-0585F	L-Lfix-190	1	90-90
Staklo lajsna Z40-668	Glazing bead Z40-668	Lkr-180	2	90-90
Staklo lajsna Z40-668	Glazing bead Z40-668	Lfix-72	2	90-90
Staklo lajsna Z40-668	Glazing bead Z40-668	Hkr-224	2	90-90
Staklo lajsna Z40-668	Glazing bead Z40-668	H-170.5	2	90-90
Umetak FT-0573F	Additional profile FT-0573F	L-Lfix-60.5	1	45-45
Umetak FT-0573F	Additional profile FT-0573F	H-44	2	45-90
Umetak FB-41	Additional profile FB-41	Lfix-72	1	90-90
Umetak F-1486	Additional profile F-1486	Lfix-122	1	90-90
Kutna spojnica 710.145	Corner bracket 710.145		2	
Kutna spojnica 710.133	Corner bracket 710.133		4	
Kutna spojnica 710.091	Corner bracket 710.091		2	
Kutna spojnica 710.134	Corner bracket 710.134		4	
Kutna spojnica 731.010	Corner bracket 731.010		4	
Kutna spojnica 730.001	Corner bracket 730.001		6	
Veznik prečke 710.066	T bracket 710.066		6	
Veznik prečke 710.079	T bracket 710.079		6	
Cent. brtva rama 338.009	Central gasket-frame 338.009	1Lkr+2Hkr		
Cent. brtva krila 338.010	Central gasket-sash 338.010	2Lkr+2Hkr		
Brtva prema st. vanj. 328.003	Glazing gasket -ext.- 328.003	2Lkr+2Hkr+2Lfix+2H		
Brtva prema st. unut. 311.004	Glazing gasket -int.- 311.004	2Lkr+2Hkr+2Lfix+2H		
Brtva 317.002	Rebate gasket 317.002	3Lkr+4Hkr		
Brtva praga 331.012	Threshold gasket 331.012	L-Lfix-190	1	
Izolacijski umetak 340.013	Underglass insulator 340.013	2(Lkr-170)+2(Hkr-194)		
Izolacijski umetak 340.013	Underglass insulator 340.013	2(Lfix-66)+2(H-141.5)		
Umetak na pragu 373.020	End cap for threshold 373.020		1 par	
Brava G-U Secury s MR2 (45) tri ključanja 122.015	Multipoint lock - G-U Secury MR2 (45) -122.015		1	
Prihvatna pločica 24x6x2 122.065	Striking plate 24x6x2 122.065		2	
Prihvatni lim 24x6 (Desni) 122.063	Striking plate 24x6 (right) 122.063		1	
Trodijelna cilindrična šarka 112.012.01 - bijela	Barrel door hinge 112.012.01 - white	2 ili (3) po krilu ovisno o visini i tež.krila 2 or (3) per sash(dep. of height and weight of sash)		
Ručka za vrata 102.028	Door handle 102.028		2	
Cilindar (75+35) 122.095	Cylinder (75+35) 122.095		1	
Štitnik cilindra 122.098	Cylinder rosette 124.098		2	
Protuprovalni umetak 141.002	Security pin 141.002		2	
Četvrtka 102.025	Square spindle 102.025		1	
Staklo 40 mm	Glass 40 mm	(Lfix-87.5)x(H-141.5)	1	
Staklo 40 mm	Glass 40 mm	(Lkr.-194)x(Hkr-194)	1	

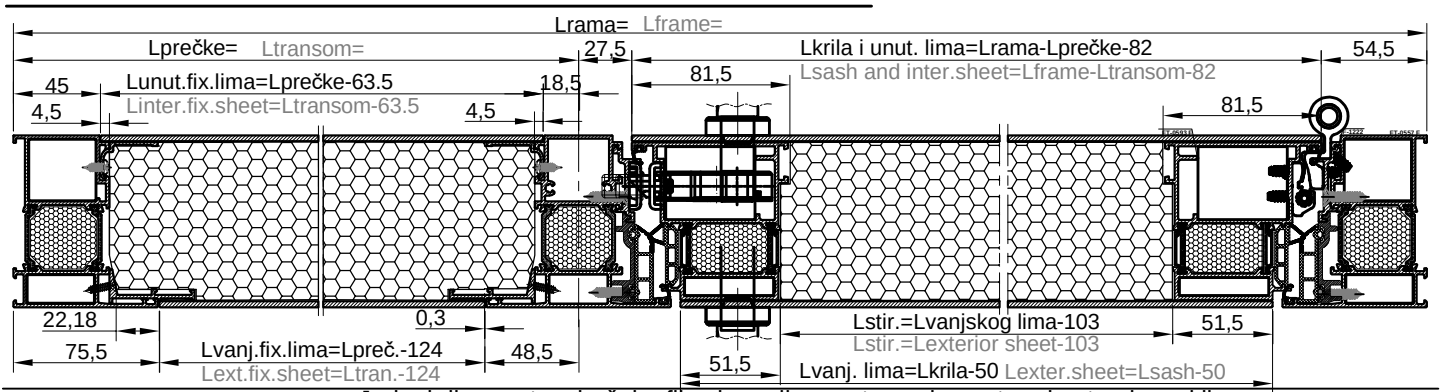


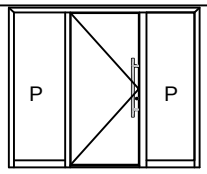




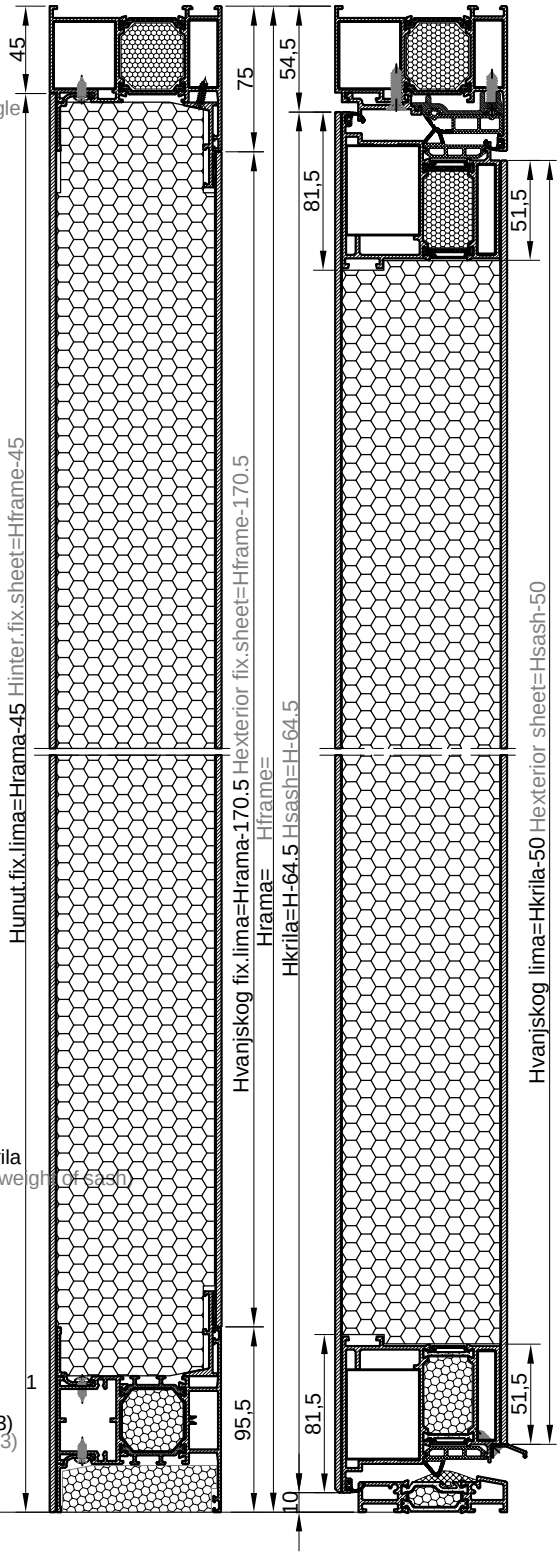
naziv name		mjera dimension	kom. pcs.	pilanje sawing angle
Ram FT-0557F	Frame FT-0557F	L	1	45-45
Ram FT-0557F	Frame FT-0557F	H	2	45-90
Krilo FT-0593F	Sash FT-0593F	L-Lpreč.-82	2	45-45
Krilo FT-0593F	Sash FT-0593F	H-64.5	2	45-45
Prag FT-0584F	Threshold FT-0584F	L-Lpreč.-147.5	1	90-90
Prečka FT-2577F	Transom FT-2577F	Lpreč.-62	1	90-90
Prečka FT-0580F	Transom FT-0580F	H-44.5	1	90-90
Okapnica F-0970	Drip cap profile F-0970	Lkr-58	1	90-90
Al profil F-1222	Al profile F-1222	L-Lpreč.-62	1	45-45
Al profil F-1222	Al profile F-1222	H-44.5	2	45-90
Staklo lajsna F-1544	Glazing bead F-1544	Lpreč.-72	3	90-90
Staklo lajsna F-1544	Glazing bead F-1544	H-169.5	2	90-90
Al umetak F-1543	Additional profile F-1543	Lpreč.-72	2	90-90
Al umetak F-1543	Additional profile F-1543	H-207	2	90-90
Kutna spojnica 710.126	Corner bracket 710.126		2	
Kutna spojnica 710.173	Corner bracket 710.173		2	
Kutna spojnica 710.136	Corner bracket 710.136		4	
Kutna spojnica 710.169	Corner bracket 710.169		4	
Kutna spojnica 730.001	Corner bracket 730.001		6	
Veznik 710.082	T bracket 710.082		3	
Veznik 710.083	T bracket 710.083		3	
Centralna brtva rama 338.004	Cent.gask.-frame 338.004	1Lkr+2Hkr		
Centralna brtva krila 338.006	Cent. gask.-sash 338.006	2Lkr+2Hkr		
Brtva 317.002	Rebate gasket 317.002	3Lkr+4Hkr		
Brtva praga 331.012	Threshold gasket 331.012	L-Lpreč.-147.5	1	90-90
Čep okapnice F-0970 375.001	End cap for F-0970 375.001		1 par	
Umetak na pragu 363.103	End cap for threshold 363.103		1 par	
Umetak na ramu 374.043	Add. pvc profile 374.043	L-Lpreč.-61	1	45-45
Umetak na ramu 374.043	Add. pvc profile 374.043	H-44	2	45-90
Brava G-U Secury s MR2 (45) tri ključanja 122.015	Multipoint lock - G-U Secury MR2 (45) -122.015		1	
Prihvatna pločica 24x6x2 122.065	Striking plate 24x6x2 122.065		2	
Prihvatni lim 24x6 (Lijevi) 122.064	Striking plate 24x6 (Left) 122.064		1	
Trodijelna cilindrična šarka 112.011.01 - bijela	Barrel door hinge-3 part 112.011.01 - white	2 ili (3) po krilu ovisno o visini i tež.krila 2 or (3) per sash(dep. of height and weight of sash)		
Ručka za vrata 102.028	Door handle 102.028		2	
Cilindar (75+35) 122.095	Cylinder (75+35) 122.095		1	
Štitnik cilindra 122.098	Cylinder rosette 122.098		2	
Protuprovalni umetak 141.002	Security pin 141.002		2	
Četvrtka 102.025	Square spindle 102.025		1	
Vanjski lim panela krila 3 mm	Exterior sheet 3 mm	(Lkr.-50)x(Hkr.-50)	1	
Unutarnji lim panela krila 3 mm	Int. sheet sash panel 3 mm	LkrxHkr	1	
Stirodur u krilu (ispuna panela 81.4 mm)	Stirodur in sash (panel 81.4 mm)	(Lvanj.lima-103)x(Hvanj.lima-103) (Lexter.sheet-103)x(Hexter.sheet-103)		
Vanjski lim panela fixnog 3 mm	Exterior sheet pan. fix.3 mm	(Lpreč.-124)x(H-170.5)	1	
Unutarnji lim panela fixnog 3 mm	Interior sheet pan.fix. 3 mm	(Lpreč.-63.5)x(H-45)	1	
Stirodur u fixnom (ispuna panela 81.4 mm)	Stirodur in fixed part (panel 81.4 mm)	(Lpreč.-73)x(H-121) (Ltran.-73)x(H-121)		

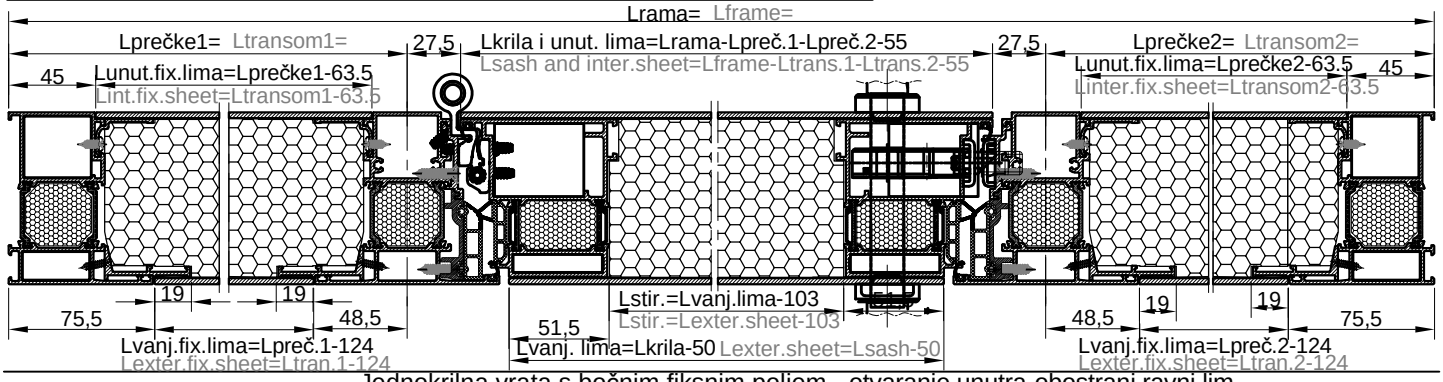






naziv name		mjera dimension	kom. pcs.	pilanje sawing angle
Ram FT-0557F	Frame FT-0557F	L	1	45-45
Ram FT-0557F	Frame FT-0557F	H	2	45-90
Krilo FT-0593F	Sash FT-0593F	L-Lpeč.1-Lpreč.2-55	2	45-45
Krilo FT-0593F	Sash FT-0593F	H-64.5	2	45-45
Prag FT-0584F	Threshold FT-0584F	L-Lpreč.1-Lpreč.2-126	1	90-90
Prečka FT-2577F	Transom FT-2577F	Lpreč.1-62	1	90-90
Prečka FT-2577F	Transom FT-2577F	Lpreč.2-62	1	90-90
Prečka FT-0580F	Transom FT-0580F	H-44.5	2	90-90
Okapnica F-0970	Drip cap profile F-0970	Lkr-58	1	90-90
Al profil F-1222	Al profile F-1222	L-Lpreč.1-Lpreč.2-35	1	45-45
Al profil F-1222	Al profile F-1222	H-44.5	2	45-90
Staklo lajsna F-1544	Glazing bead F-1544	Lpreč.1-72	3	90-90
Staklo lajsna F-1544	Glazing bead F-1544	Lpreč.2-72	3	90-90
Staklo lajsna F-1544	Glazing bead F-1544	H-176.5	2	90-90
Al umetak F-1543	Additional profile F-1543	Lpreč.1-72	2	90-90
Al umetak F-1543	Additional profile F-1543	Lpreč.2-72	2	90-90
Al umetak F-1543	Additional profile F-1543	H-214	4	90-90
Kutna spojnica 710.126	Corner bracket 710.126		2	
Kutna spojnica 710.173	Corner bracket 710.173		2	
Kutna spojnica 710.136	Corner bracket 710.136		4	
Kutna spojnica 710.169	Corner bracket 710.169		4	
Kutna spojnica 730.001	Corner bracket 730.001		6	
Veznik 710.082	T bracket 710.082		3	
Veznik 710.083	T bracket 710.083		3	
Centralna brtva rama 338.004	Cent. gask.-frame 338.004	1Lkr+2Hkr		
Centralna brtva krila 338.006	Cent. gask.-sash 338.006	2Lkr+2Hkr		
Brtva 317.002	Rebate gasket 317.002	3Lkr+4Hkr		
Brtva praga 331.012	Threshold gasket 331.012	L-Lpreč.-147.5	1	90-90
Čep okapnice F-0970 375.001	End cap for F-0970 375.001		1 par	
Umetak na pragu 363.103	End cap for threshold 363.103		1 par	
Umetak na ramu 374.043	Add. pvc profile 374.043	L-Lpreč.-61	1	45-45
Umetak na ramu 374.043	Add. pvc profile 374.043	H-44	2	45-90
Brava G-U Secury s MR2 (45) tri ključanja 122.015	Multipoint lock - G-U Secury MR2 (45) -122.015		1	
Prihvatna pločica 24x6x2 122.065	Striking plate 24x6x2 122.065		2	
Prihvatni lim 24x6 (Desni) 122.063	Striking plate 24x6 (Right) 122.063		1	
Trodijelna cilindrična šarka 112.011.01 - bijela	Barrel door hinge-3 part 112.011.01 - white	2 ili (3) po krilu ovisno o visini i tež.krila 2 or (3) per sash(dep. of height and weight of sash)		
Ručka za vrata 102.028	Door handle 102.028		2	
Cilindar (75+35) 122.095	Cylinder (75+35) 122.095		1	
Štitnik cilindra 122.098	Cylinder rosette 122.098		2	
Protuprovalni umetak 141.002	Security pin 141.002		2	
Četvrtka 102.025	Square spindle 102.025		1	
Vanjski lim panela krila 3 mm	Exterior sheet 3 mm	(Lkr.-50)x(Hkr.-50)	1	
Unutarnji lim panela krila 3 mm	Inter.sheet pan.sash 3 mm	LkrxHkr	1	
Stirodur u krilu (ispuna panela 81.4 mm)	Stirodur in sash (panel 81.4 mm)	(Lvanj.lima-103)x(Hvanj.lima-103) (Lext.sheet-103)x(Hext.sheet-103)		
Vanjski lim panela fixnog 3 mm	Exter. panel. fix. 3 mm	(Lpreč.-124)x(H-170.5)	1	
Unutarnji lim panela fixnog 3 mm	Inter. sheet pan.fix. 3 mm	(Lpreč.-63.5)x(H-45	1	
Stirodur u fixnom (ispuna panela 81.4 mm)	Stirodur in fixed part (panela 81.4 mm)	(Lpreč.-73)x(H-121) (Ltran.-73)x(H-121)		

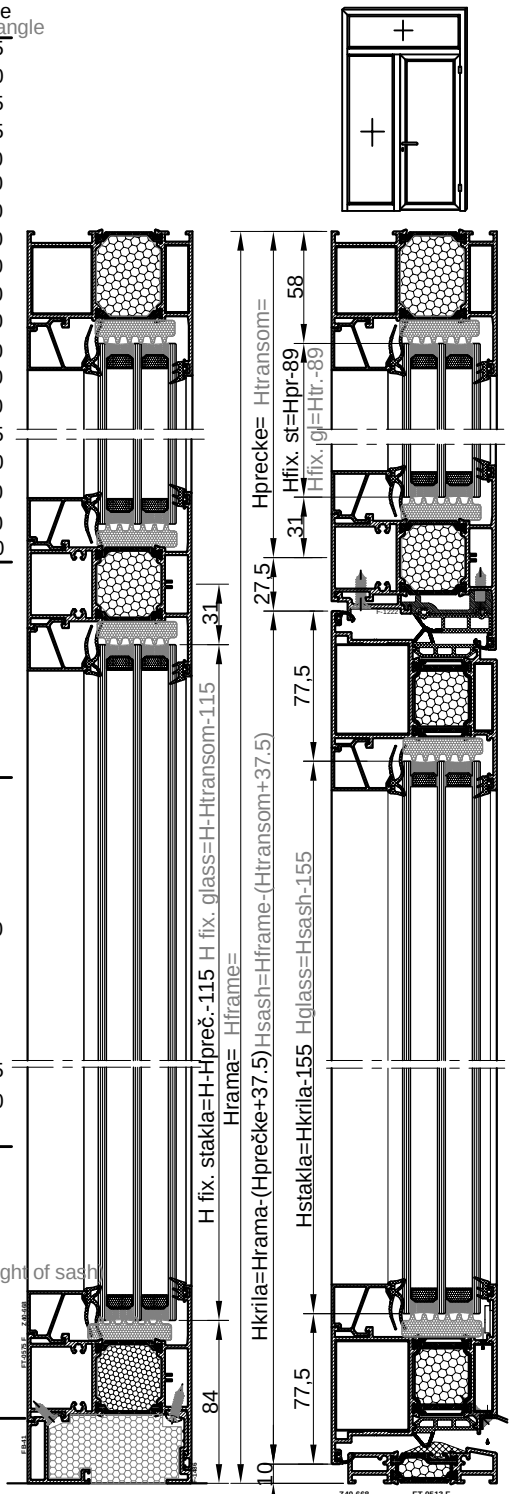


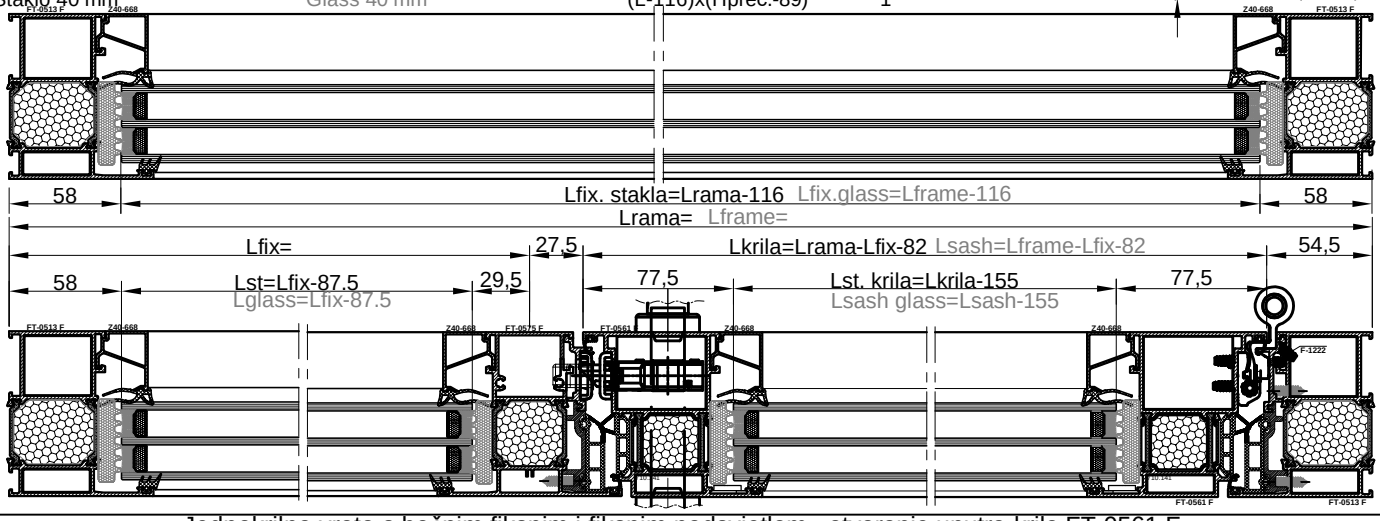


Jednokrilna vrata s bočnim fiksnim poljem i nadsvjetlom

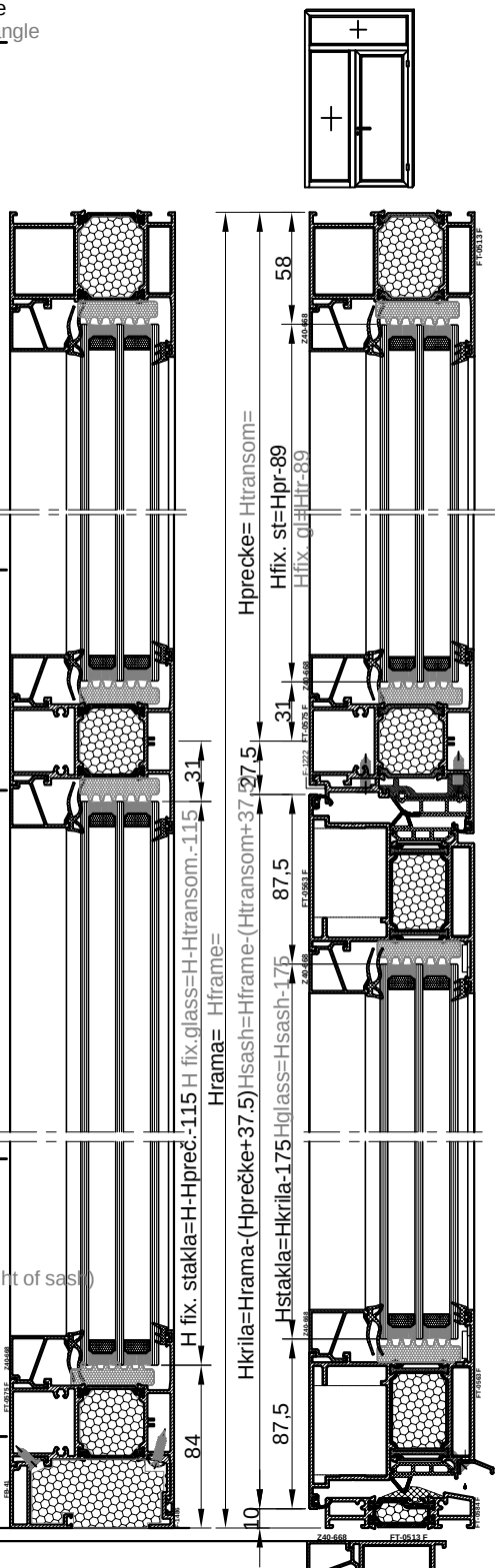
Single-leaf door with side fixed field and top light

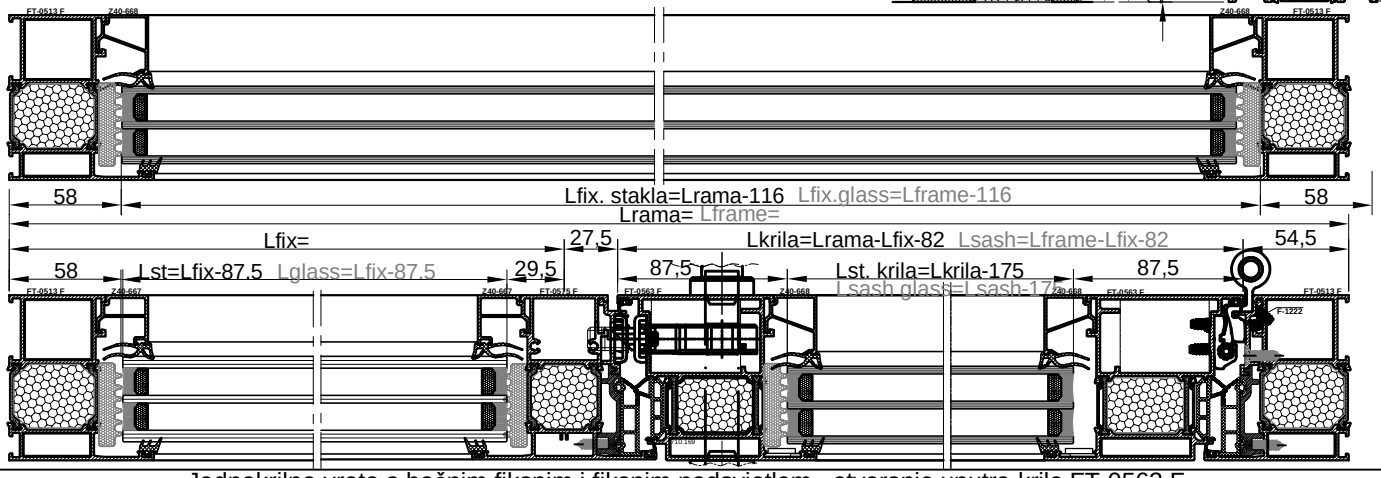
naziv name		mjera dimension	kom. pcs.	pilanje sawing angle
Ram FT-0513F	Frame FT-0513F	L	1	45-45
Ram FT-0513F	Frame FT-0513F	H	2	45-90
Krilo FT-0561F	Sash FT-0561F	L-Lfix-82	2	45-45
Krilo FT-0561F	Sash FT-0561F	H-(Hpr.+37.5)	2	45-45
Prag FT-0584F	Threshold FT-0584F	L-Lfix-153	1	90-90
Staklo lajsna Z40-668	Glazing bead Z40-668	Lfix-72	2	90-90
Staklo lajsna Z40-668	Glazing bead Z40-668	Lkr-141	2	90-90
Staklo lajsna Z40-668	Glazing bead Z40-668	L-99	2	90-90
Staklo lajsna Z40-668	Glazing bead Z40-668	H-Hpreč.-143.5)	2	90-90
Staklo lajsna Z40-668	Glazing bead Z40-668	Hkr-185	2	90-90
Staklo lajsna Z40-668	Glazing bead Z40-668	Hpreč.-116	2	90-90
Prečka FT-0575F	Transom FT-0575F	L-88	1	90-90
Prečka FT-0575F	Transom FT-0575F	H-Hpreč.-17.5	1	90-90
Prečka na parap. FT-0575F	Tran.-bottom frame prof FT-0575F	Lfix-60.5	1	90-90
Umetak rama F-1222	Additional profile F-1222	L-Lfix-62	1	45-45
Umetak rama F-1222	Additional profile F-1222	H-Hpreč.-18	2	45-90
Umetak FB-41	Additional profile FB-41	Lfix-72	1	90-90
Umetak F-1486	Additional profile F-1486	Lfix-122	1	90-90
Okapnica F-0970	Drip cap profile F-0970	Lkr-58	1	90-90
Kutna spojnica 710.145	Corner bracket 710.145		2	
Kutna spojnica 710.141	Corner bracket 710.141		4	
Kutna spojnica 710.136	Corner bracket 710.136		4	
Kutna spojnica 731.010	Corner bracket 731.010		4	
Kutna spojnica 710.091	Corner bracket 710.091		2	
Veznik prečke 710.066	T bracket 710.066		6	
Veznik prečke 710.079	T bracket 710.079		6	
Kutna spojnica 730.001	Corner bracket 730.001		10	
Centralna brtva rama 338.004	Central gasket-frame 338.004	1Lkr+2Hkr		
Centralna brtva krila 338.006	Central gasket-sash 338.006	2Lkr+2Hkr		
Brtva 317.002	Rebate gasket 317.002	3Lkr+4Hkr		
Brtva prema staklu vanj. 328.003	Glazing gasket -ext.- 328.003	2Lfix+2H+2Lkr+2Hkr+2L		
Brtva prema staklu unut. 311.004	Glazing gasket -internal- 311.004	2Lfix+2H+2Lkr+2Hkr+2L		
Brtva praga 331.012	Threshold gasket 331.012	L-Lfix-153	1	90-90
Izolacijski umetak 340.013	Underglass insulator 340.013	2(Lkr-131)+2(Hkr-155)		
Izolacijski umetak 340.013	Underglass insulator 340.013	2(L-91.5)+2(Hpr.-89)		
Čep okapnice F-0970 375.001	End cap for F-0970 375.001		1 par	
Umetak na pragu 363.103	End cap for threshold 363.103		1 par	
Umetak na ramu 374.043	Additional pvc profile 374.043	L-Lfix-61	1	45-45
Umetak na ramu 374.043	Additional pvc profile 374.043	H-Hpreč.-17	2	45-90
Brava G-U Secury s MR2 (35) tri ključanja 122.016	Multipoint lock - G-U Secury MR2 (35) -122.016		1	
Prihvatna pločica 24x6x2 122.065	Striking plate 24x6x2 122.065		2	
Prihvatni lim 24x6 (Lijevi) 122.064	Striking plate 24x6 (Left) 122.064		1	
Trodijelna cilindrična šarka 112.011.01 - bijela	Barrel door hinge-3 part 112.011.01 - white	2 ili (3) po krilu ovisno o visini i tež.krila 2 or (3) per sash(dep. of height and weight of sash		
Ručka za vrata 102.028	Door handle 102.028		2	
Cilindar (75+35) 122.095	Cylinder (75+35) 122.095		1	
Štitnik cilindra 122.098	Cylinder rosette 122.098		2	
Četvrtka 102.025	Square spindle 102.025		1	
Protuprovalni umetak 141.002	Security pin 141.002		2	
Staklo 40 mm	Glass 40 mm	(Lfix-87.5)x(Hpreč.-115)	1	
Staklo 40 mm	Glass 40 mm	(Lkr.-155)x(Hkr.-155)	1	
Staklo 40 mm	Glass 40 mm	(L-116)x(Hpreč.-89)	1	



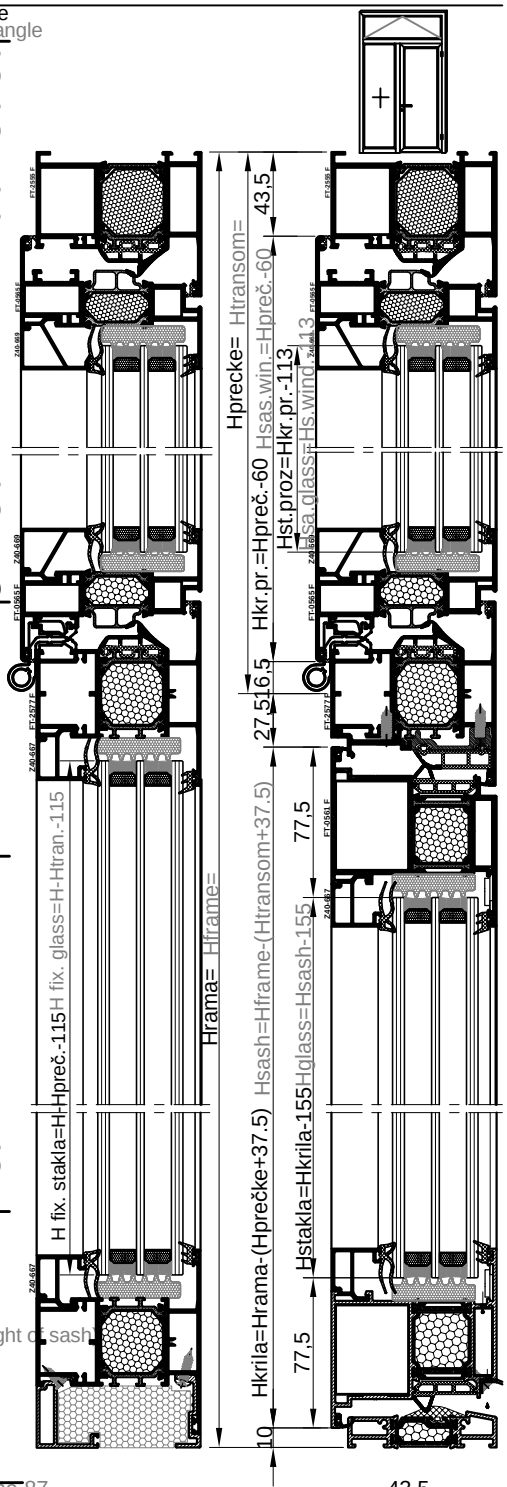


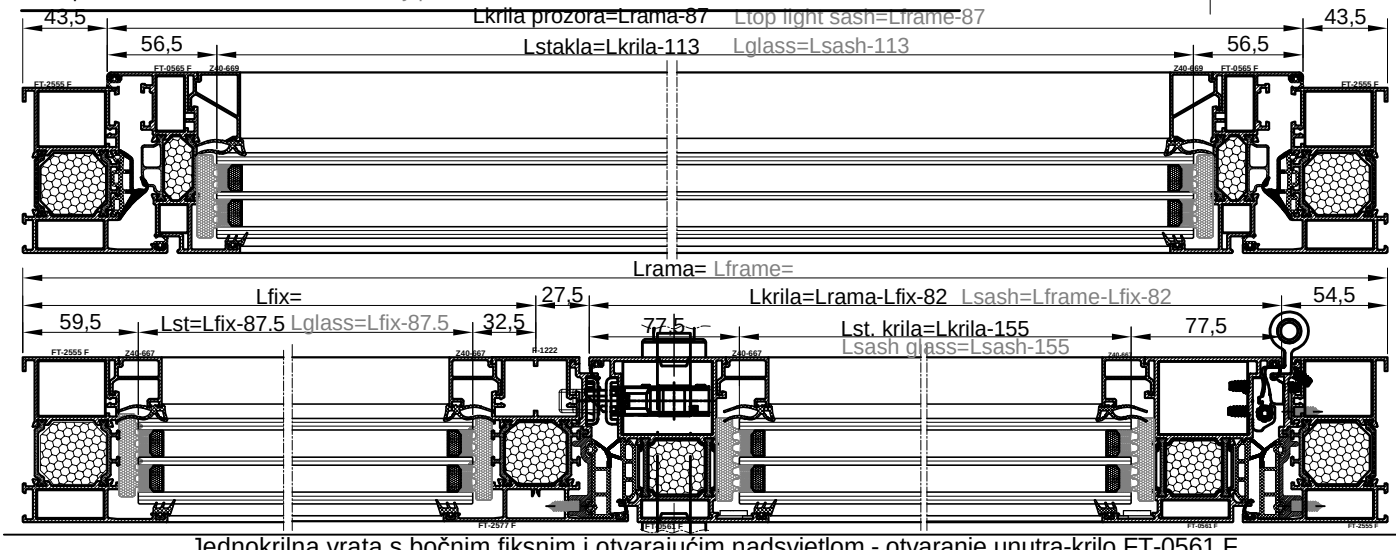
naziv name		mjera dimension	kom. pcs.	pilanje sawing angle
Ram FT-0513F	Frame FT-0513F	L	1	45-45
Ram FT-0513F	Frame FT-0513F	H	2	45-90
Krilo FT-0563F	Sash FT-0563F	L-Lfix-82	2	45-45
Krilo FT-0563F	Sash FT-0563F	H-(Hpr.+37.5)	2	45-45
Prag FT-0584F	Threshold FT-0584F	L-Lfix-153	1	90-90
Staklo lajsna Z40-668	Glazing bead Z40-668	Lfix-72	2	90-90
Staklo lajsna Z40-668	Glazing bead Z40-668	Lkr-161	2	90-90
Staklo lajsna Z40-668	Glazing bead Z40-668	L-99	2	90-90
Staklo lajsna Z40-668	Glazing bead Z40-668	H-Hpreč.-143.5	2	90-90
Staklo lajsna Z40-668	Glazing bead Z40-668	Hkr-205	2	90-90
Staklo lajsna Z40-668	Glazing bead Z40-668	Hpreč.-116	2	90-90
Prečka FT-0575F	Transom FT-0575F	L-88	1	90-90
Prečka FT-0575F	Transom FT-0575F	H-Hpreč.-17.5	1	90-90
Prečka na parap. FT-0575F	Tran.-bottom frame prof. FT-0575F	Lfix-60.5	1	90-90
Umetak rama F-1222	Additional profile F-1222	L-Lfix-62	1	45-45
Umetak rama F-1222	Additional profile F-1222	H-Hpreč.-18	2	45-90
Umetak FB-41	Additional profile FB-41	Lfix-72	1	90-90
Umetak F-1486	Additional profile F-1486	Lfix-122	1	90-90
Okapnica F-0970	Drip cap profile F-0970	Lkr-58	1	90-90
Kutna spojnica 710.145	Corner bracket 710.145		2	
Kutna spojnica 710.169	Corner bracket 710.169		4	
Kutna spojnica 710.136	Corner bracket 710.136		4	
Kutna spojnica 731.010	Corner bracket 731.010		4	
Kutna spojnica 710.091	Corner bracket 710.091		2	
Veznik prečke 710.066	T bracket 710.066		6	
Veznik prečke 710.079	T bracket 710.079		6	
Kutna spojnica 730.001	Corner bracket 730.001		10	
Centralna brtva rama 338.004	Central gasket-frame 338.004	1Lkr+2Hkr		
Centralna brtva krila 338.006	Central gasket-sash 338.006	2Lkr+2Hkr		
Brtva 317.002	Rebate gasket 317.002	3Lkr+4Hkr		
Brtva prema staklu vanj. 328.003	Glazing gasket -ext.- 328.003	2Lfix+2H+2Lkr+2Hkr+2L		
Brtva prema staklu unut. 311.004	Glazing gasket -internal- 311.004	2Lfix+2H+2Lkr+2Hkr+2L		
Brtva praga 331.012	Threshold gasket 331.012	L-Lfix-153	1	90-90
Izolacijski umetak 340.013	Underglass insulator 340.013	2(Lkr-151)+2(Hkr-175)		
Izolacijski umetak 340.013	Underglass insulator 340.013	2(L-91.5)+2(Hpr.-89)		
Čep okapnice F-0970 375.001	End cap for F-0970 375.001		1 par	
Umetak na pragu 363.103	End cap for threshold 363.103		1 par	
Umetak na ramu 374.043	Additional pvc profile 374.043	L-Lfix-61	1	45-45
Umetak na ramu 374.043	Additional pvc profile 374.043	H-Hpreč.-17	2	45-90
Brava G-U Secury s MR2 (45) tri ključanja 122.015	Multipoint lock - G-U Secury MR2 (45) -122.015		1	
Prihvatna pločica 24x6x2 122.065	Striking plate 24x6x2 122.065		2	
Prihvatni lim 24x6 (Lijevi) 122.064	Striking plate 24x6 (Left) 122.064		1	
Trodijelna cilindrična šarka 112.011.01 - bijela	Barrel door hinge-3 part 112.011.01 - white	2 ili (3) po krilu ovisno o visini i tež.krila 2 or (3) per sash(dep. of height and weight of sash)		
Ručka za vrata 102.028	Door handle 102.028		2	
Cilindar (75+35) 122.095	Cylinder (75+35) 122.095		1	
Štitnik cilindra 122.098	Cylinder rosette 122.098		2	
Četvrtka 102.025	Square spindle 102.025		1	
Protuprovalni umetak 141.002	Security pin 141.002		2	
Staklo 40 mm	Glass 40 mm	(Lfix-87.5)x(Hpreč.-115)	1	
Staklo 40 mm	Glass 40 mm	(Lkr.-175)x(Hkr.-205)	1	
Staklo 40 mm	Glass 40 mm	(L-116)x(Hpreč.-89)	1	





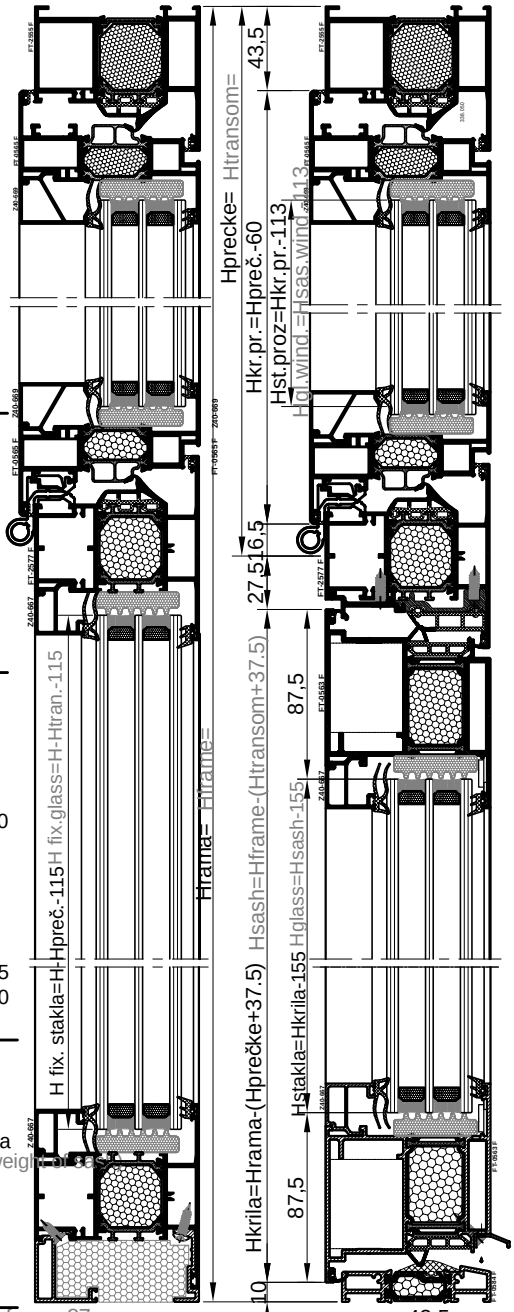
naziv name		mjera dimension	kom. pcs.	pilanje sawing angle
Ram FT-2555F	Frame FT-2555F	L	1	45-45
Ram FT-2555F	Frame FT-2555F	H	2	45-90
Krilo FT-0561F	Sash FT-0561F	L-Lfix-82	1	45-45
Krilo FT-0561F	Sash FT-0561F	H-(Hpr.kr+37.5)	2	45-90
Prag FT-0584F	Threshold FT-0584F	L-Lfix-153	1	90-90
Krilo pr.FT-0565F	Top light sash FT-0565F	L-87	2	45-45
Krilo pr.FT-0565F	Top light sash FT-0565F	Lpreč.-60	2	45-45
Staklo lajsna Z40-667	Glazing bead Z40-667	Lfix-72	2	90-90
Staklo lajsna Z40-667	Glazing bead Z40-667	Lkr-141	2	90-90
Staklo lajsna Z40-667	Glazing bead Z40-667	H-Hpreč.-143.5	2	90-90
Staklo lajsna Z40-667	Glazing bead Z40-667	Hkr.-185	2	90-90
Staklo lajsna Z40-669	Glazing bead Z40-669	Lkr.proz.-93	2	90-90
Staklo lajsna Z40-669	Glazing bead Z40-669	Hkr.proz.-137	2	90-90
Prečka FT-2577F	Transom FT-2577F	L-90	1	90-90
Prečka FT-2577F	Transom FT-2577F	H-Hpreč.-18	1	90-90
Prečka na parap. FT-2577F	Tran.-bottom frame prof. FT-2577F	Lfix.-63	1	90-90
Umetak rama F-1222	Additional profile F-1222	L-89	1	45-45
Umetak rama F-1222	Additional profile F-1222	H-(Hpr+17.7)	2	45-90
Umetak FB-41	Additional profile FB-41	Lfix-72	1	90-90
Umetak F-1486	Additional profile F-1486	Lfix-122	1	90-90
Okapnica F-0970	Drip cap profile F-0970	Lkr-58	1	90-90
Kutna spojnica 710.172	Corner bracket 710.172		2	
Kutna spojnica 710.141	Corner bracket 710.141		4	
Kutna spojnica 710.136	Corner bracket 710.136		4	
Kutna spojnica 731.010	Corner bracket 731.010		4	
Kutna spojnica 710.072	Corner bracket 710.072		2	
Veznik prečke 710.066	T bracket 710.066		10	
Veznik prečke 710.079	T bracket 710.079		10	
Kutna spojnica 730.001	Corner bracket 730.001		14	
Kutna spojnica 710.485	Corner bracket 710.485		4	
Kutna spojnica 710.458	Corner bracket 710.458		4	
Centralna brtva rama 338.004	Central gasket-frame 338.004	1Lkr+2Hkr		
Centralna brtva krila 338.006	Central gasket-sash 338.006	2Lkr+2Hkr		
Brtva 317.002	Rebate gasket 317.002	3Lkr+4L+4Hkr+2Hpreč		
Brtva prema staklu vanj. 328.003	Glazing gasket -ext.- 328.003	2Lfix+2H+2Lkr+2Hkr+2L		
Brtva prema staklu unut. 311.004	Glazing gasket -internal- 311.004	2Lfix+2H+2Lkr+2Hkr+2L		
Brtva praga 331.012	Threshold gasket 331.012	L-Lfix-153	1	90-90
Izolacijski umetak 340.013	Underglass insulator 340.013	2(Lkr-131)+2(Hkr-155)		
Izolacijski umetak 340.013	Underglass insulator 340.013	2(L-91.5)+2(Hpr.-89)		
Čep okapnice F-0970 375.001	End cap for F-0970 375.001		1 par	
Cent.brtva prozora 338.050	Cent.gasket-window 338.050	2Lkr+2Hkr		
Umetak na pragu 363.103	End cap for threshold 363.103		1 par	
Umetak na ramu 374.043	Additional pvc profile 374.043	L-Lfix-61	1	45-45
Umetak na ramu 374.043	Additional pvc profile 374.043	H-Hpreč.-17	2	45-90
Brava G-U Secury s MR2 (35) tri ključanja 122.016	Multipoint lock - G-U Secury MR2 (35) -122.016		1	
Prihvatna pločica 24x6x2 122.065	Striking plate 24x6x2 122.065		2	
Prihvatni lim 24x6 (Lijevi) 122.064	Striking plate 24x6 (Left) 122.064		1	
Trodijelna cilindrična šarka 112.011.01 - bijela	Barrel door hinge-3 part 112.011.01 - white	2 ili (3) po krilu ovisno o visini i tež.krila 2 or (3) per sash(dep. of height and weight of sash		
Ručka za vrata 102.028	Door handle 102.028		2	
Cilindar (75+35) 122.095	Cylinder (75+35) 122.095		1	
Štitnik cilindra 122.098	Cylinder rosette 124.098		2	
Četvrtka 102.025	Square spindle 102.025		1	
Protuprovalni umetak 141.002	Security pin 141.002		2	

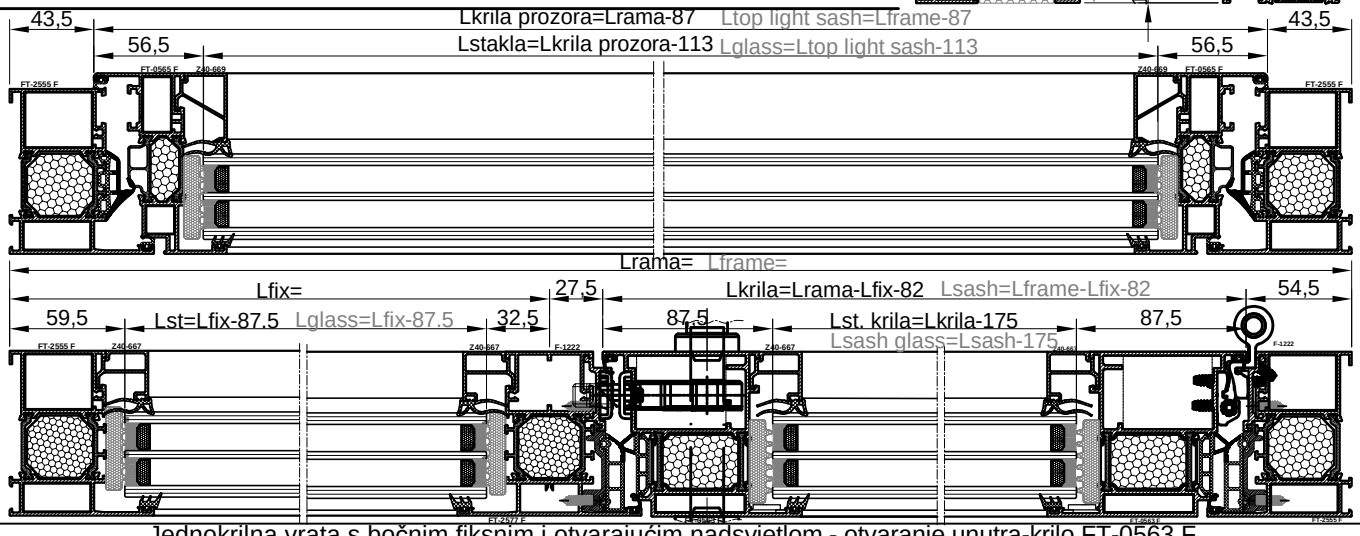




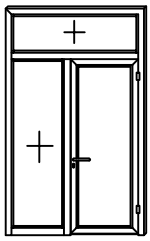
naziv name		mjera dimension	kom. pcs.	pilanje sawing angle
Ram FT-2555F	Frame FT-2555F	L	1	45-45
Ram FT-2555F	Frame FT-2555F	H	2	45-90
Krilo FT-0563F	Sash FT-0563F	L-Lfix-82	1	45-45
Krilo FT-0563F	Sash FT-0563F	H-(Hpr.kr+37.5)	2	45-90
Prag FT-0584F	Threshold FT-0584F	L-Lfix-153	1	90-90
Krilo pr.FT-0565F	Top light sash FT-0565F	L-87	2	45-45
Krilo pr.FT-0565F	Top light sash FT-0565F	Lpreč.-60	2	45-45
Staklo lajsna Z40-667	Glazing bead Z40-667	Lfix-72	2	90-90
Staklo lajsna Z40-667	Glazing bead Z40-667	Lkr-141	2	90-90
Staklo lajsna Z40-667	Glazing bead Z40-667	H-Hpreč.-143.5	2	90-90
Staklo lajsna Z40-667	Glazing bead Z40-667	Hkr.-185	2	90-90
Staklo lajsna Z40-669	Glazing bead Z40-669	Lkr.proz.-93	2	90-90
Staklo lajsna Z40-669	Glazing bead Z40-669	Hkr.proz.-137	2	90-90
Prečka FT-2577F	Transom FT-2577F	L-90	1	90-90
Prečka FT-2577F	Transom FT-2577F	H-Hpreč.-18	1	90-90
Prečka na parap. FT-2577F	Tran.-bottom frame prof. FT-2577F	Lfix.-63	1	90-90
Umetak rama F-1222	Additional profile F-1222	L-89.1	1	45-45
Umetak rama F-1222	Additional profile F-1222	H-(Hpr+17.7)	2	45-90
Umetak FB-41	Additional profile FB-41	Lfix-72	1	90-90
Umetak F-1486	Additional profile F-1486	Lfix-122	1	90-90
Okapnica F-0970	Drip cap profile F-0970	Lkr-58	1	90-90
Kutna spojnica 710.172	Corner bracket 710.172		2	
Kutna spojnica 710.141	Corner bracket 710.141		4	
Kutna spojnica 710.136	Corner bracket 710.136		4	
Kutna spojnica 731.010	Corner bracket 731.010		4	
Kutna spojnica 710.072	Corner bracket 710.072		2	
Veznik prečke 710.066	T bracket 710.066		10	
Veznik prečke 710.079	T bracket 710.079		10	
Kutna spojnica 730.001	Corner bracket 730.001		14	
Kutna spojnica 710.485	Corner bracket 710.485		4	
Kutna spojnica 710.458	Corner bracket 710.458		4	
Centralna brtva rama 338.004	Central gasket-frame 338.004	1Lkr+2Hkr		
Centralna brtva krila 338.006	Central gasket-sash 338.006	2Lkr+2Hkr		
Brtva 317.002	Rebate gasket 317.002	3Lkr+4L+4Hkr+2Hpreč		
Brtva prema staklu vanj. 328.003	Glazing gasket -ext.- 328.003	2Lfix+2H+2Lkr+2Hkr+2L		
Brtva prema staklu unut. 311.004	Glazing gasket -internal- 311.004	2Lfix+2H+2Lkr+2Hkr+2L		
Brtva praga 331.012	Threshold gasket 331.012	L-Lfix-153	1	90-90
Izolacijski umetak 340.013	Underglass insulator 340.013	2(Lkr-151)+2(Hkr-175)		
Izolacijski umetak 340.013	Underglass insulator 340.013	2(L-91.5)+2(Hpr.-89)		
Čep okapnice F-0970 375.001	End cap for F-0970 375.001		1 par	
Cent.brtva prozora 337.002	Cent.gasket-window 337.002	2Lkr+2Hkr		
Umetak na pragu 363.103	End cap for threshold 363.103		1 par	
Umetak na ramu 374.043	Additional pvc profile 374.043	L-Lfix-61	1	45-45
Umetak na ramu 374.043	Additional pvc profile 374.043	H-Hpreč.-17	2	45-90
Brava G-U Secury s MR2 (45) tri ključanja 122.015	Multipoint lock - G-U Secury MR2 (45) -122.015		1	
Prihvatna pločica 24x6x2 122.065	Striking plate 24x6x2 122.065		2	
Prihvatni lim 24x6 (Lijevi) 122.064	Striking plate 24x6 (Left) 122.064		1	
Trodijelna cilindrična šarka 112.011.01 - bijela	Barrel door hinge-3 part 112.011.01 - white	2 ili (3) po krilu ovisno o visini i tež.krila 2 or (3) per sash(dep. of height and weigh		
Ručka za vrata 102.028	Door handle 102.028		2	
Cilindar (75+35) 122.095	Cylinder (75+35) 122.095		1	
Štitnik cilindra 122.098	Cylinder rosette 122.098		2	
Četvrtka 102.025	Square spindle 102.025		1	
Protuprovalni umetak 141.002	Security pin 141.002		2	

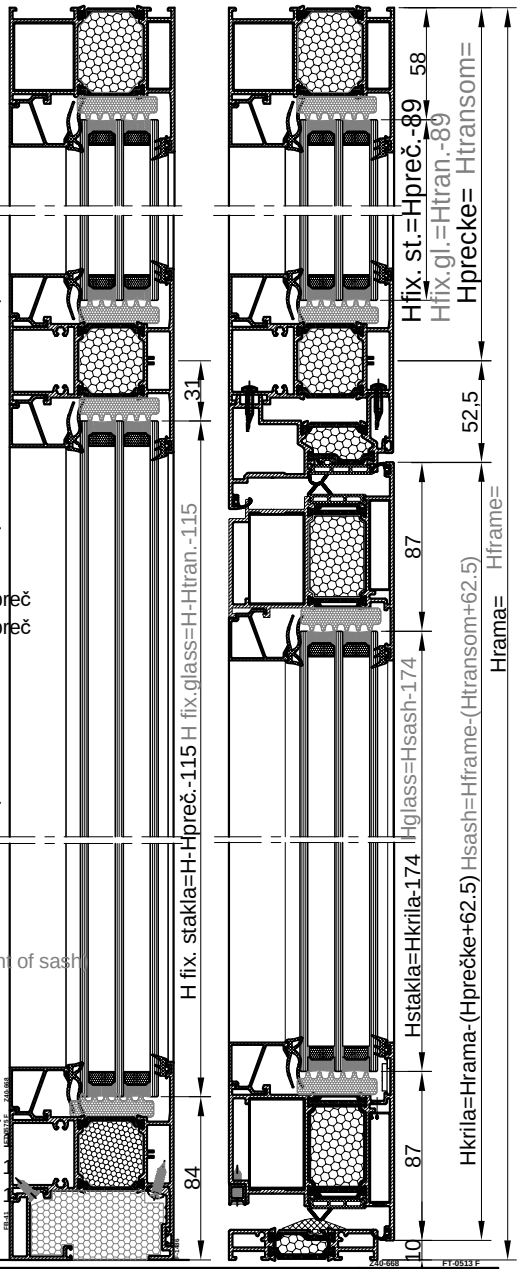


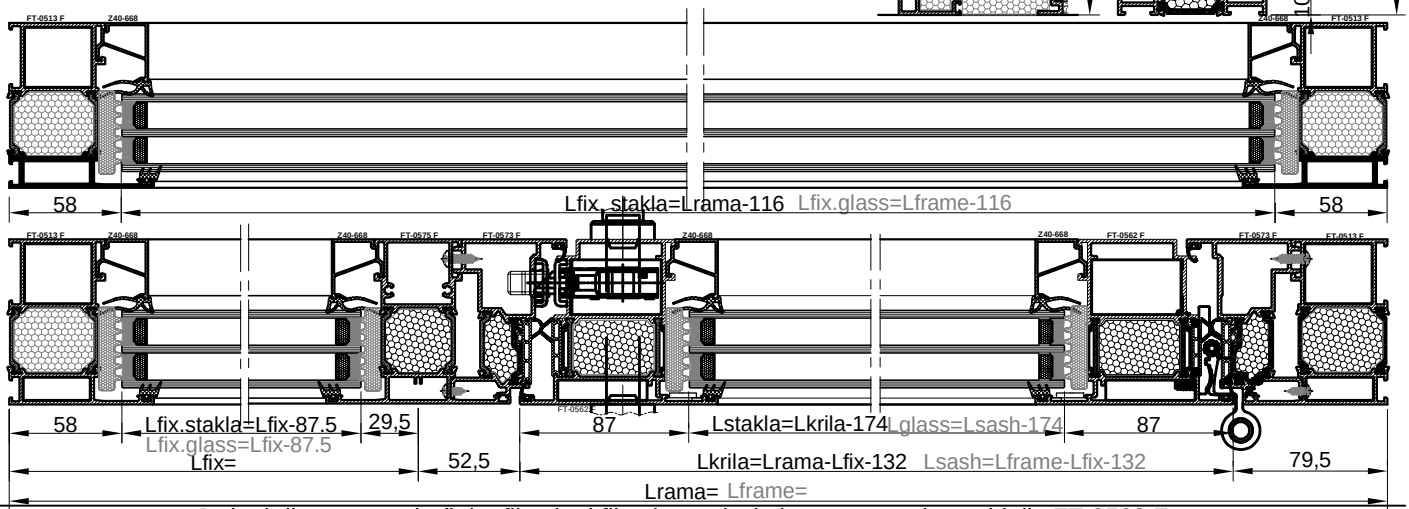




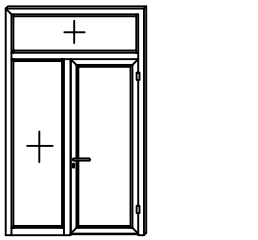
naziv name		mjera dimension	kom. pcs.	pilanje sawing angle
Ram FT-0513F	Frame FT-0513F	L	1	45-45
Ram FT-0513F	Frame FT-0513F	H	2	45-90
Krilo FT-0562F	Sash FT-0562F	L-Lfix-132	2	45-45
Krilo FT-0562F	Sash FT-0562F	H-(Hpr.+62.5)	2	45-45
Prečka FT-0575F	Transom FT-0575F	L-87.5	1	90-90
Prečka FT-0575F	Transom FT-0575F	H-Hpreč.-17	1	90-90
Parap. prečka FT-0575F	Tran.-bottom frame prof.FT-0575F	Lfix.-60.5	1	90-90
Prag FT-0585F	Threshold FT-0585F	L-Lfix-190	1	90-90
Staklo lajsna Z40-668	Glazing bead Z40-668	Lkr-160	2	90-90
Staklo lajsna Z40-668	Glazing bead Z40-668	Lfix-72	2	90-90
Staklo lajsna Z40-668	Glazing bead Z40-668	L-99	2	90-90
Staklo lajsna Z40-668	Glazing bead Z40-668	Hkr-204	2	90-90
Staklo lajsna Z40-668	Glazing bead Z40-668	H-Hpreč.-143.5	2	90-90
Staklo lajsna Z40-668	Glazing bead Z40-668	Hpreč.-116	2	90-90
Umetak FT-0573F	Additional profile FT-0573F	L-Lfix-60.5	1	45-45
Umetak FT-0573F	Additional profile FT-0573F	H-(Hpr+17)	2	45-90
Umetak FB-41	Additional profile FB-41	Lfix-72	1	90-90
Umetak F-1486	Additional profile F-1486	Lfix-122	1	90-90
Kutna spojnica 710.145	Corner bracket 710.145		2	
Kutna spojnica 710.133	Corner bracket 710.133		4	
Kutna spojnica 710.091	Corner bracket 710.091		2	
Kutna spojnica 710.134	Corner bracket 710.134		4	
Kutna spojnica 731.010	Corner bracket 731.010		4	
Kutna spojnica 730.001	Corner bracket 730.001		6	
Veznik prečke 710.066	T bracket 710.066		10	
Veznik prečke 710.079	T bracket 710.079		10	
Cent. brtva rama 338.009	Central gasket-frame 338.009	1Lkr+2Hkr		
Cent. brtva krila 338.010	Central gasket-sash 338.010	2Lkr+2Hkr		
Brtva prema st. vanj. 328.003	Glazing gasket -ext.- 328.003	2Lkr+2Hkr+2Lfix+2H+2L+2Hpreč		
Brtva prema st. unut. 311.004	Glazing gasket -int.- 311.004	2Lkr+2Hkr+2Lfix+2H+2L+2Hpreč		
Brtva 317.002	Rebate gasket 317.002	3Lkr+4Hkr		
Brtva praga 331.012	Threshold gasket 331.012	L-Lfix-190	1	
Izolacijski umetak 340.013	Underglass insulator 340.013	2(Lkr-150)+2(Hkr-174)		
Izolacijski umetak 340.013	Underglass insulator 340.013	2(Lfix-66)+2(H-141.5)		
Izolacijski umetak 340.013	Underglass insulator 340.013	2(Lfix-92)+2(Hpreč.-89)		
Umetak na pragu 373.020	End cap for threshold 373.020		1 par	
Brava G-U Secury s MR2 (35) tri ključanja 122.016	Multipoint lock - G-U Secury MR2 (35) -122.016		1	
Prihvatna pločica 24x6x2 122.065	Striking plate 24x6x2 122.065		2	
Prihvatni lim 24x6 (Desni)122.063	Striking plate 24x6 (Right) 122.063		1	
Trodijelna cilindrična šarka 112.012.01 - bijela	Barrel door hinge-3 part 112.012.01 - white	2 ili (3) po krilu ovisno o visini i tež.krila 2 or (3) per sash(dep. of height and weight of sash)		
Ručka za vrata 102.028	Door handle 102.028		2	
Cilindar (75+35) 122.095	Cylinder (75+35) 122.095		1	
Štitnik cilindra 122.098	Cylinder rosette 122.098		2	
Protuprovalni umetak 141.002	Security pin 141.002		2	
Četvrtka 102.025	Square spindle 102.025		1	
Staklo 40 mm	Glass 40 mm	(Lfix-87.5)x(H-Hpreč.-115)		
Staklo 40 mm	Glass 40 mm	(Lkr.-174)x(Hkr-174)		
Staklo 40 mm	Glass 40 mm	(L-116)x(Hpre.-89)		

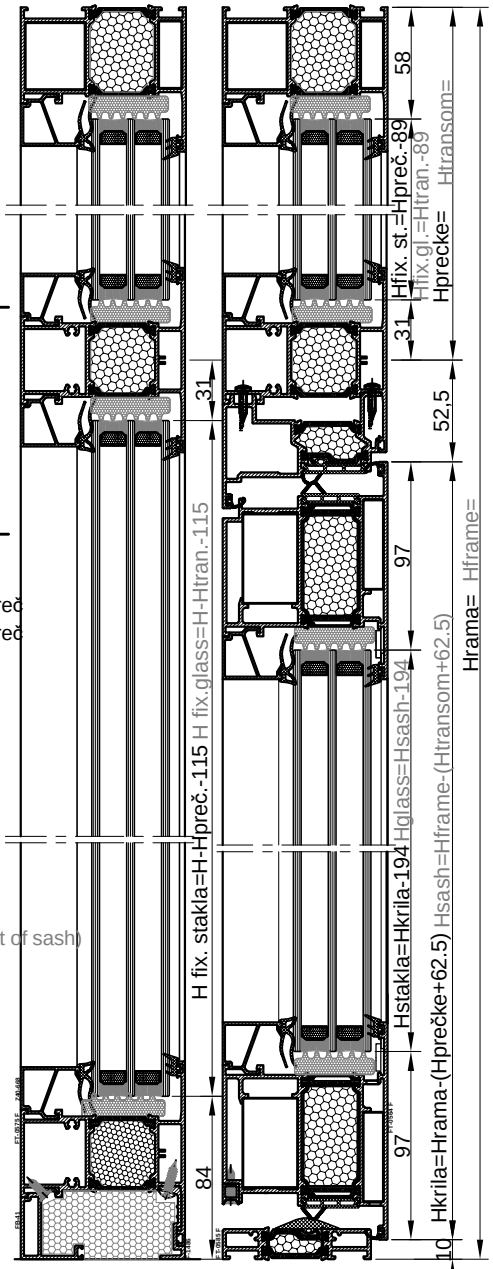


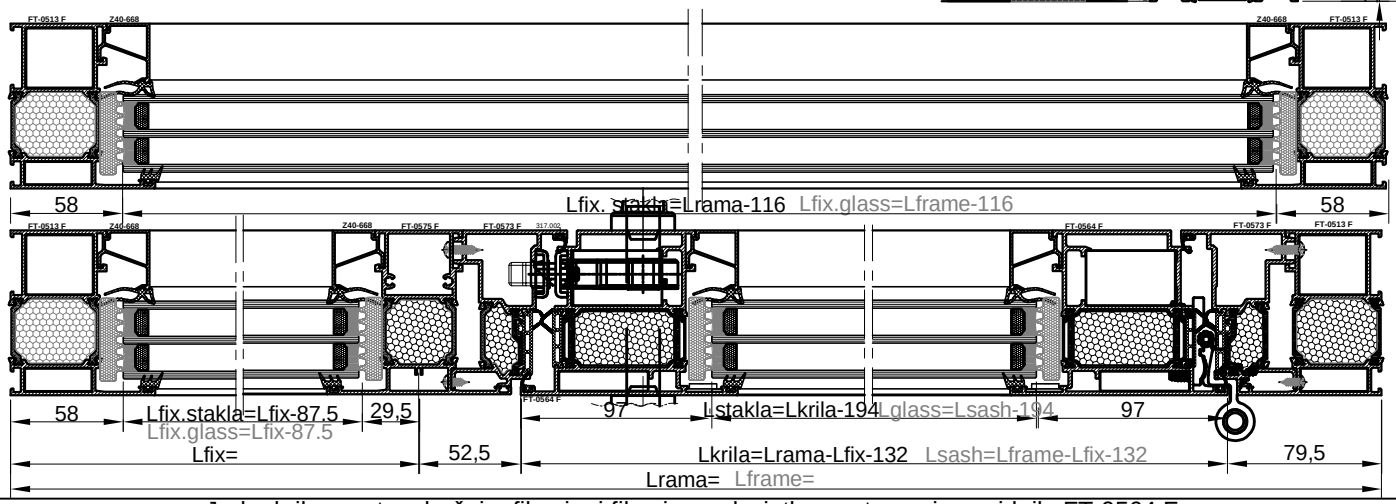




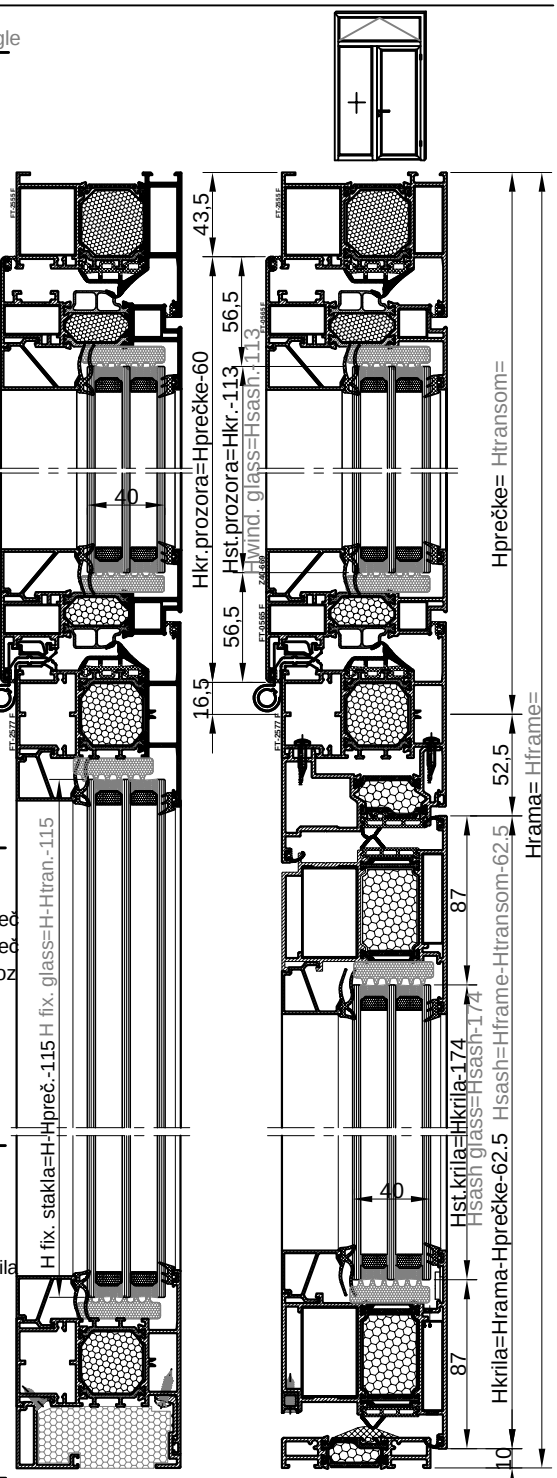
naziv name		mjera dimension	kom. pcs.	pilanje sawing angle
Ram FT-0513F	Frame FT-0513F	L	1	45-45
Ram FT-0513F	Frame FT-0513F	H	2	45-90
Krilo FT-0564F	Sash FT-0564F	L-Lfix-132	2	45-45
Krilo FT-0564F	Sash FT-0564F	H-(Hpr.+62.5)	2	45-45
Prečka FT-0575F	Transom FT-0575F	L-87.5	1	90-90
Prečka FT-0575F	Transom FT-0575F	H-Hpreč.-17	1	90-90
Parap. prečka FT-0575F	Tran.-bottom frame prof.FT-0575F	Lfix.-60.5	1	90-90
Prag FT-0585F	Threshold FT-0585F	L-Lfix-190	1	90-90
Staklo lajsna Z40-668	Glazing bead Z40-668	Lkr-180	2	90-90
Staklo lajsna Z40-668	Glazing bead Z40-668	Lfix-72	2	90-90
Staklo lajsna Z40-668	Glazing bead Z40-668	L-99	2	90-90
Staklo lajsna Z40-668	Glazing bead Z40-668	Hkr-224	2	90-90
Staklo lajsna Z40-668	Glazing bead Z40-668	H-Hpreč.-143.5	2	90-90
Staklo lajsna Z40-668	Glazing bead Z40-668	Hpreč.-116	2	90-90
Umetak FT-0573F	Additional profile FT-0573F	L-Lfix-60.5	1	45-45
Umetak FT-0573F	Additional profile FT-0573F	H-(Hpr+17)	2	45-90
Umetak FB-41	Additional profile FB-41	Lfix-72	1	90-90
Umetak F-1486	Additional profile F-1486	Lfix-122	1	90-90
Kutna spojnica 710.145	Corner bracket 710.145		2	
Kutna spojnica 710.133	Corner bracket 710.133		4	
Kutna spojnica 710.091	Corner bracket 710.091		2	
Kutna spojnica 710.134	Corner bracket 710.134		4	
Kutna spojnica 731.010	Corner bracket 731.010		4	
Kutna spojnica 730.001	Corner bracket730.001		6	
Veznik prečke 710.066	T bracket 710.066		10	
Veznik prečke 710.079	T bracket 710.079		10	
Cent. brtva rama 338.009	Central gasket-frame 338.009	1Lkr+2Hkr		
Cent. brtva krila 338.010	Central gasket-sash 338.010	2Lkr+2Hkr		
Brtva prema st. vanj. 328.003	Glazing gasket -ext.- 328.003	2Lkr+2Hkr+2Lfix+2H+2L+2Hpreč		
Brtva prema st. unut. 311.004	Glazing gasket -int.- 311.004	2Lkr+2Hkr+2Lfix+2H+2L+2Hpreč		
Brtva 317.002	Rebate gasket 317.002	3Lkr+4Hkr		
Brtva praga 331.012	Threshold gasket 331.012	L-Lfix-190	1	
Izolacijski umetak 340.013	Underglass insulator 340.013	2(Lkr-170)+2(Hkr-194)		
Izolacijski umetak 340.013	Underglass insulator 340.013	2(Lfix-66)+2(H-141.5)		
Izolacijski umetak 340.013	Underglass insulator 340.013	2(Lfix-92)+2(Hpreč.-89)		
Umetak na pragu 373.020	End cap for threshold 373.020		1 par	
Brava G-U Secury s MR2 (45) tri ključanja 122.015	Multipoint lock - G-U Secury MR2 (45) -122.015		1	
Prihvatna pločica 24x6x2 122.065	Striking plate 24x6x2 122.065		2	
Prihvatni lim 24x6 (Desni) 122.063	Striking plate 24x6 (Right) 122.063		1	
Trodijelna cilindrična šarka 112.012.01 - bijela	Barrel door hinge-3 part 112.012.01 - white	2 ili (3) po krilu ovisno o visini i tež.krila 2 or (3) per sash(dep. of height and weight of sash)		
Ručka za vrata 102.028	Door handle 102.028		2	
Cilindar (75+35) 122.095	Cylinder (75+35) 122.095		1	
Štitnik cilindra 122.098	Cylinder rosette 122.098		2	
Četvrtka 102.025	Square spindle 102.025		1	
Protuprovalni umetak 141.002	Security pin 141.002		2	
Staklo 40 mm	Glass 40 mm	(Lfix-87.5)x(H-Hpreč.-115)	1	
Staklo 40 mm	Glass 40 mm	(Lkr.-174)x(Hkr-174)	1	
Staklo 40 mm	Glass 40 mm	(L-116)x(Hpre.-89)	1	

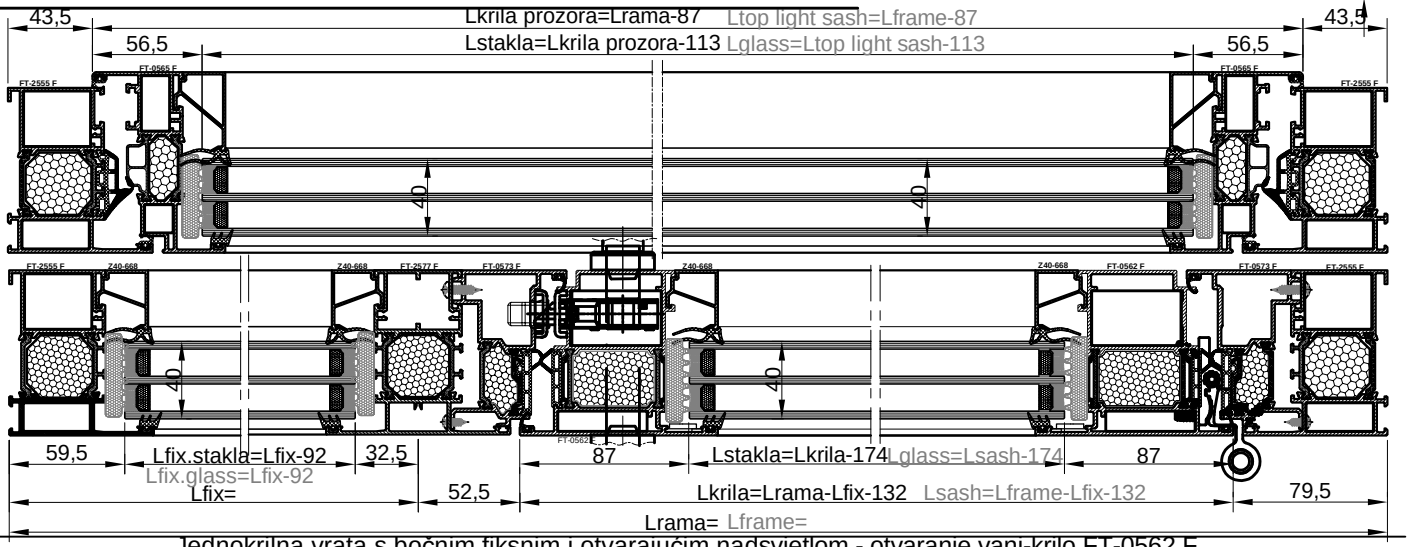






naziv name		mjera dimension	kom. pcs.	pilanje sawing angle
Ram FT-2555F	Frame FT-2555F	L	1	45-45
Ram FT-2555F	Frame FT-2555F	H	2	45-90
Krilo FT-0562F	Sash FT-0562F	L-Lfix-132	2	45-45
Krilo FT-0562F	Sash FT-0562F	H-(Hpr.+62.5)	2	45-45
Prečka FT-2577F	Transom FT-2577F	L-90	1	90-90
Prečka FT-2577F	Transom FT-2577F	H-Hpreč.-18	1	90-90
Parap. prečka FT-2577F	Tran.-bottom fr.prof.FT-2577F	Lfix.-63	1	90-90
Prag FT-0585F	Threshold FT-0585F	L-Lfix-190	1	90-90
Krilo pr.FT-0565F	Top light sash FT-0565F	L-87	2	45-45
Krilo pr.FT-0565F	Top light sash FT-0565F	Lpreč.-60	2	45-45
Staklo lajsna Z40-668	Glazing bead Z40-668	Lkr-160	2	90-90
Staklo lajsna Z40-668	Glazing bead Z40-668	Lfix-72	2	90-90
Staklo lajsna Z40-668	Glazing bead Z40-668	Hkr-204	2	90-90
Staklo lajsna Z40-668	Glazing bead Z40-668	H-Hpreč.-143.5	2	90-90
Staklo lajsna Z40-670	Glazing bead Z40-670	Lkr.pr.-93	2	90-90
Staklo lajsna Z40-670	Glazing bead Z40-670	Hkr.pr.-137	2	90-90
Umetak FT-0573F	Additional profile FT-0573F	L-Lfix-60.5	1	45-45
Umetak FT-0573F	Additional profile FT-0573F	H-(Hpr+17)	2	45-90
Umetak FB-41	Additional profile FB-41	Lfix-72	1	90-90
Umetak F-1486	Additional profile F-1486	Lfix-122	1	90-90
Kutna spojnica 710.172	Corner bracket 710.172		2	
Kutna spojnica 710.133	Corner bracket 710.133		4	
Kutna spojnica 710.072	Corner bracket 710.072		2	
Kutna spojnica 710.134	Corner bracket 710.134		4	
Kutna spojnica 731.010	Corner bracket 731.010		4	
Kutna spojnica 730.001	Corner bracket 730.001		10	
Kutna spojnica 710.485	Corner bracket 710.485		4	
Kutna spojnica 710.458	Corner bracket 710.458		4	
Veznik prečke 710.066	T bracket 710.066		10	
Veznik prečke 710.079	T bracket 710.079		10	
Cent. brtva rama 338.009	Central gasket-frame 338.009	1Lkr+2Hkr		
Cent. brtva krila 338.010	Central gasket-sash 338.010	2Lkr+2Hkr		
Brtva prema st. vanj. 328.003	Glazing gasket -ext.- 328.003	2Lkr+2Hkr+2Lfix+2H+2L+2Hpreč		
Brtva prema st. unut. 311.004	Glazing gasket -int.- 311.004	2Lkr+2Hkr+2Lfix+2H+2L+2Hpreč		
Brtva 317.002	Rebate gasket 317.002	3Lkr+4Hkr+3Lkr.proz.+3Hkr.proz		
Brtva praga 331.012	Threshold gasket 331.012	L-Lfix-190	1	
Cent.brtva prozora 338.050	Cent.gasket-window 338.050	2Lkr+2Hkr		
Izolacijski umetak 340.013	Underglass insulator 340.013	2(Lkr-150)+2(Hkr-174)		
Izolacijski umetak 340.013	Underglass insulator 340.013	2(Lfix-66)+2(H-141.5)		
Izolacijski umetak 340.013	Underglass insulator 340.013	2(Lfix-92)+2(Hpreč.-89)		
Umetak na pragu 373.020	End cap for threshold 373.020		1 par	
Brava G-U Secury s MR2 (35) tri ključanja 122.016	Multipoint lock - G-U Secury MR2 (35) -122.016		1	
Prihvatna pločica 24x6x2 122.065	Striking plate 24x6x2 122.065		2	
Prihvatni lim 24x6 (Desni)122.063	Striking plate 24x6 (Right) 122.063		1	
Trodijelna cilindrična šarka 112.012.01 - bijela	Barrel door hinge-3 part 112.012.01 - white	2 ili (3) po krilu ovisno o visini i tež.krila 2 or (3) per sash(dep. of height and weight of sash)		
Ručka za vrata 102.028	Door handle 102.028		2	
Cilindar (75+35) 122.095	Cylinder (75+35) 122.095		1	
Štitnik cilindra 122.098	Cylinder rosette 122.098		2	
Protuprovalni umetak 141.002	Security pin 141.002		2	
Četvrtka 102.025	Square spindle 102.025		1	



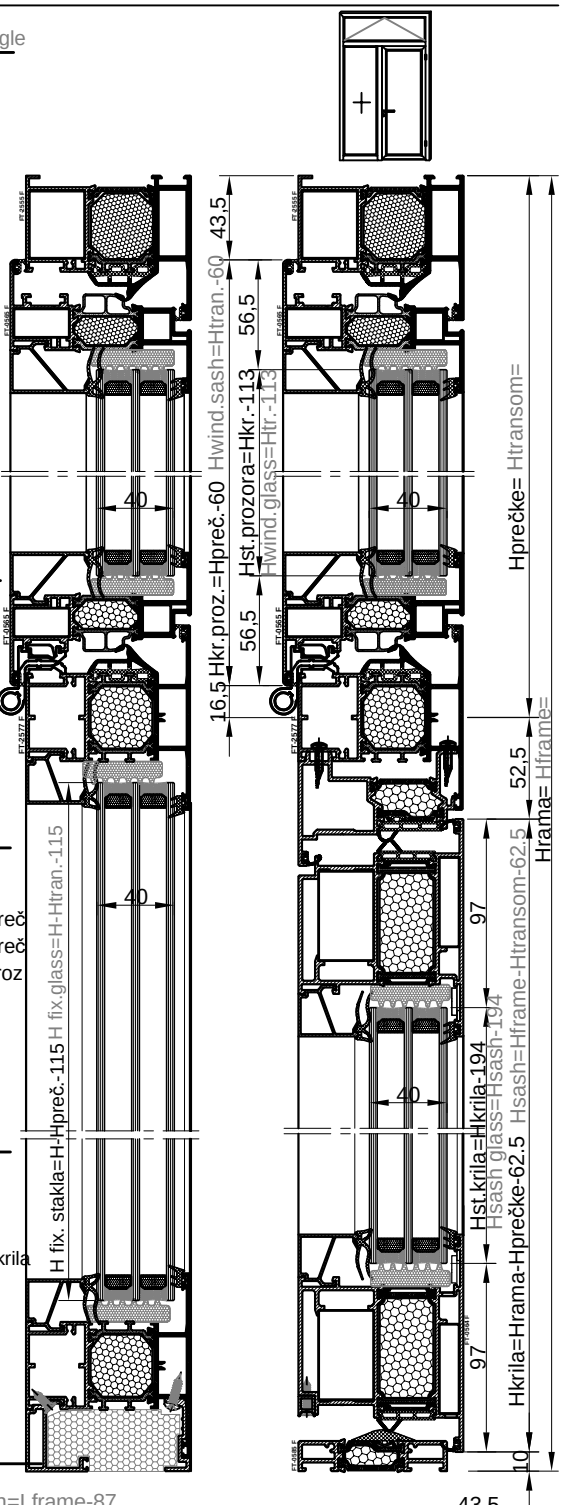


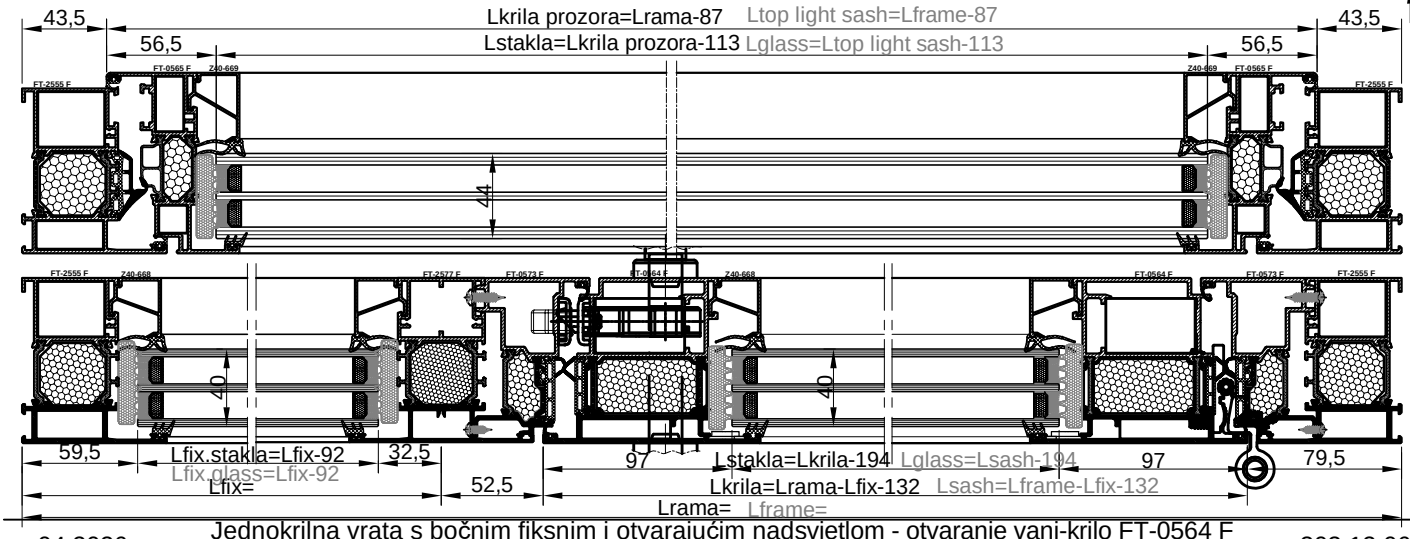
FEAL

TERMO 85 VS i 85 VP

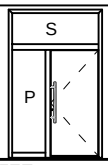
Rezne liste
Cutting lists

naziv name		mjera dimension	kom. pcs.	pilanje sawing angle
Ram FT-2555F	Frame FT-2555F	L	1	45-45
Ram FT-2555F	Frame FT-2555F	H	2	45-90
Krilo FT-0564F	Sash FT-0562F	L-Lfix-132	2	45-45
Krilo FT-0564F	Sash FT-0562F	H-(Hpr.+62.5)	2	45-45
Prečka FT-2577F	Transom FT-2577F	L-90	1	90-90
Prečka FT-2577F	Transom FT-2577F	H-Hpreč.-18	1	90-90
Parap. prečka FT-2577F	Tran.-bott.frame prof.FT-2577F	Lfix.-63	1	90-90
Prag FT-0585F	Threshold FT-0585F	L-Lfix-190	1	90-90
Krilo pr.FT-0565F	Top light sash FT-0565F	L-87	2	45-45
Krilo pr.FT-0565F	Top light sash FT-0565F	Lpreč.-60	2	45-45
Staklo lajsna Z40-668	Glazing bead Z40-668	Lkr-180	2	90-90
Staklo lajsna Z40-668	Glazing bead Z40-668	Lfix-72	2	90-90
Staklo lajsna Z40-668	Glazing bead Z40-668	Hkr-224	2	90-90
Staklo lajsna Z40-668	Glazing bead Z40-668	H-Hpreč.-143.5	2	90-90
Staklo lajsna Z40-670	Glazing bead Z40-670	Lkr.pr.-93	2	90-90
Staklo lajsna Z40-670	Glazing bead Z40-670	Hkr.pr.-137	2	90-90
Umetak FT-0573F	Additional profile FT-0573F	L-Lfix-60.5	1	45-45
Umetak FT-0573F	Additional profile FT-0573F	H-(Hpr+17)	2	45-90
Umetak FB-41	Additional profile FB-41	Lfix-72	1	90-90
Umetak F-1486	Additional profile F-1486	Lfix-122	1	90-90
Kutna spojnica 710.172	Corner bracket 710.172		2	
Kutna spojnica 710.133	Corner bracket 710.133		4	
Kutna spojnica 710.072	Corner bracket 710.072		2	
Kutna spojnica 710.134	Corner bracket 710.134		4	
Kutna spojnica 731.010	Corner bracket 731.010		4	
Kutna spojnica 730.001	Corner bracket 730.001		10	
Kutna spojnica 710.485	Corner bracket 710.485		4	
Kutna spojnica 710.458	Corner bracket 710.458		4	
Veznik prečke 710.066	T bracket 710.066		10	
Veznik prečke 710.079	T bracket 710.079		10	
Cent. brtva rama 338.009	Cent. gasket-frame 338.009	1Lkr+2Hkr		
Cent. brtva krila 338.010	Cent. gasket-sash 338.010	2Lkr+2Hkr		
Brtva prema st. vanj. 328.003	Glazing gasket -ext.- 328.003	2Lkr+2Hkr+2Lfix+2H+2L+2Hpreč		
Brtva prema st. unut. 311.004	Glazing gasket -int.- 311.004	2Lkr+2Hkr+2Lfix+2H+2L+2Hpreč		
Brtva 317.002	Rebate gasket 317.002	3Lkr+4Hkr+3Lkr.proz.+3Hkr.proz		
Brtva praga 331.012	Threshold gasket 331.012	L-Lfix-190	1	
Cent.brtva prozora 338.050	Cent.gasket-window 338.050	2Lkr+2Hkr		
Izolacijski umetak 340.013	Underglass insulat. 340.013	2(Lkr-170)+2(Hkr-194)		
Izolacijski umetak 340.013	Underglass insulat. 340.013	2(Lfix-66)+2(H-141.5)		
Izolacijski umetak 340.013	Underglass insulat. 340.013	2(Lfix-92)+2(Hpreč.-89)		
Umetak na pragu 373.020	End cap for threshold 373.020		1 par	
Brava G-U Secury s MR2 (45) tri ključanja 122.015	Multipoint lock - G-U Secury MR2 (45) -122.015		1	
Prihvatna pločica 24x6x2 122.065	Striking plate 24x6x2 122.065		2	
Prihvatni lim 24x6 (Desni) 122.063	Striking plate 24x6 (Right) 122.063		1	
Trodijelna cilindrična šarka 112.012.01 - bijela	Barrel door hinge-3 part 112.012.01 - white	2 ili (3) po krilu ovisno o visini i tež.krila 2 or (3) per sash(dep. of height and weight of sash)		
Ručka za vrata 102.028	Door handle 102.028		2	
Cilindar (75+35) 122.095	Cylinder (75+35) 122.095		1	
Štitnik cilindra 122.098	Cylinder rosette 122.098		2	
Četvrtka 102.025	Square spindle 102.025		1	
Protuprovalni umetak 141.002	Security pin 141.002		2	



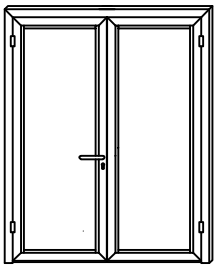


Jednokrilna vrata s bočnim fiksnim i otvarajućim nadsvjetlom - otvaranje vani-krilo FT-0564 F
Single-leaf door with side light and tilt top light - outward opening-sash FT-0564 F

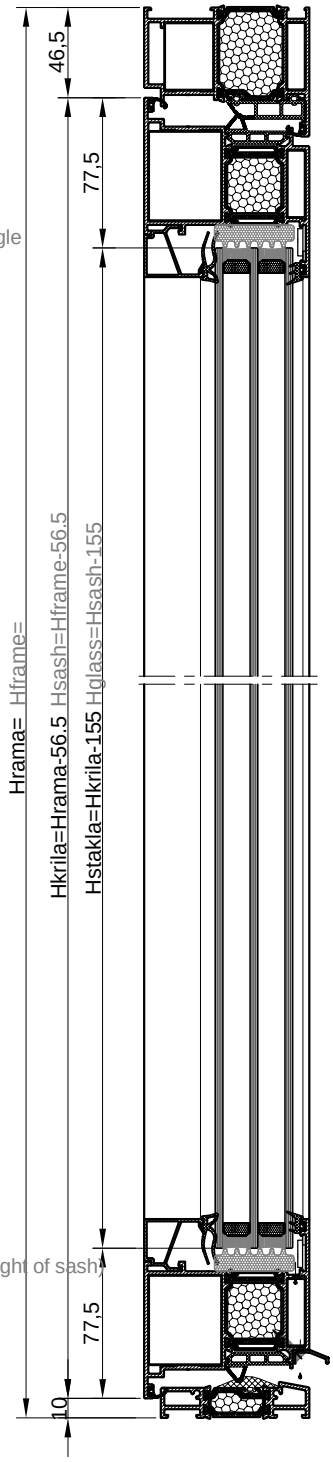


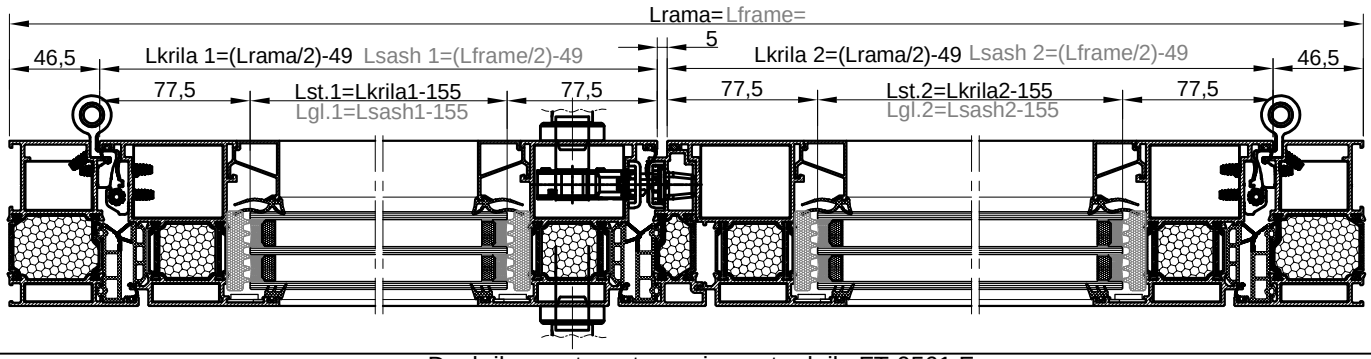
naziv / name		mjera / dimension	kom. / pcs.	pilanje / sawing angle
Ram FT-0557F	Frame FT-0557F	L	1	45-45
Ram FT-0557F	Frame FT-0557F	H	2	45-90
Krilo FT-0593F	Sash FT-0593F	L-Lpreč.-82	2	45-45
Krilo FT-0593F	Sash FT-0593F	H-Hpreč-37.5	2	45-45
Prag FT-0584F	Threshold FT-0584F	L-Lpreč.-153	1	90-90
Prečka FT-0580F	Transom FT-0580F	L-89	1	90-90
Prečka FT-2577F	Transom FT-2577F	Lpreč.-62	1	90-90
Prečka FT-0580F	Transom FT-0580F	H-Hpreč.-17.5	1	90-90
Okapnica F-0970	Drip cap profile F-0970	Lkr-58	1	90-90
Al profil F-1222	Al profile F-1222	L-Lpreč.-62	1	45-45
Al profil F-1222	Al profile F-1222	H-Hpreč.-17.5	2	45-90
Staklo lajsna F-1544	Glazing bead F-1544	L-99	2	90-90
Staklo lajsna F-1544	Glazing bead F-1544	Lpreč.-72	3	90-90
Staklo lajsna F-1544	Glazing bead F-1544	Hpreč.-122	2	90-90
Staklo lajsna F-1544	Glazing bead F-1544	H-Hpreč.-142.5	2	90-90
Al umetak F-1543	Additional profile F-1543	Lpreč.-72	2	90-90
Al umetak F-1543	Additional profile F-1543	H-Hpreč.-180.5	2	90-90
Kutna spojnica 710.126	Corner bracket 710.126		2	
Kutna spojnica 710.173	Corner bracket 710.173		2	
Kutna spojnica 710.136	Corner bracket 710.136		4	
Kutna spojnica 710.169	Corner bracket 710.169		4	
Kutna spojnica 730.001	Corner bracket 730.001		6	
Veznik 710.082	T bracket 710.082		5	
Veznik 710.083	T bracket 710.083		5	
Cent. brtva rama 338.004	Cent.gasket-frame 338.004	1Lkr+2Hkr		
Cent. brtva krila 338.006	Cent. gasket-sash 338.006	2Lkr+2Hkr		
Brtva 317.002	Rebate gasket 317.002	3Lkr+4Hkr		
Brtva praga 331.012	Threshold gasket 331.012	L-Lpreč.-153	1	90-90
Vanjska brtva fix. 328.002	Glazing gasket-ext.328.002	2L+2Hpreč.		
Unutarnja brtva fix. 311.003	Glazing gasket-int. 311.003	2L+2Hpreč.		
Čep okap. F-0970 375.001	End cap for F-0970 375.001		1 par	
Umetak na pragu 363.103	End cap for threshold 363.103		1 par	
Umetak na ramu 374.043	Umetak na ramu 374.043	L-Lpreč.-61	1	45-45
Umetak na ramu 374.043	Umetak na ramu 374.043	H-Hpreč.-17	2	45-90
Brava G-U Secury s MR2 (45) tri ključanja 122.015	Multipoint lock - G-U Secury MR2 (45) -122.015		1	
Prih. pločica 24x6x2 122.065	Striking plate 24x6x2 122.065		2	
Prih. lim 24x6 (Lijevi) 122.064	Striking plate 24x6 (Left) 122.064		1	
Trodijelna cilindr.šarka 112.011.01 - bijela	Barrel door hinge- 3 part -112.011.01-white	2 ili (3) po krilu ovisno o visini i tež.krila		
		2 or (3) per sash(dep. of height and weight of sash)		
Ručka 102.028	Door handle 102.028		2	
Cilindar (75+35) 122.095	Cylinder (75+35) 122.095		1	
Štitnik cilindra 122.098	Cylinder rosette 122.098		2	
Protuprovalni umetak 141.002	Security pin 141.002		2	
Četvrtka 102.025	Square spindle 102.025		1	

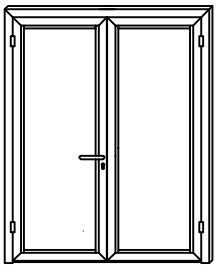
Dvokrilna vrata
Double-leaf door



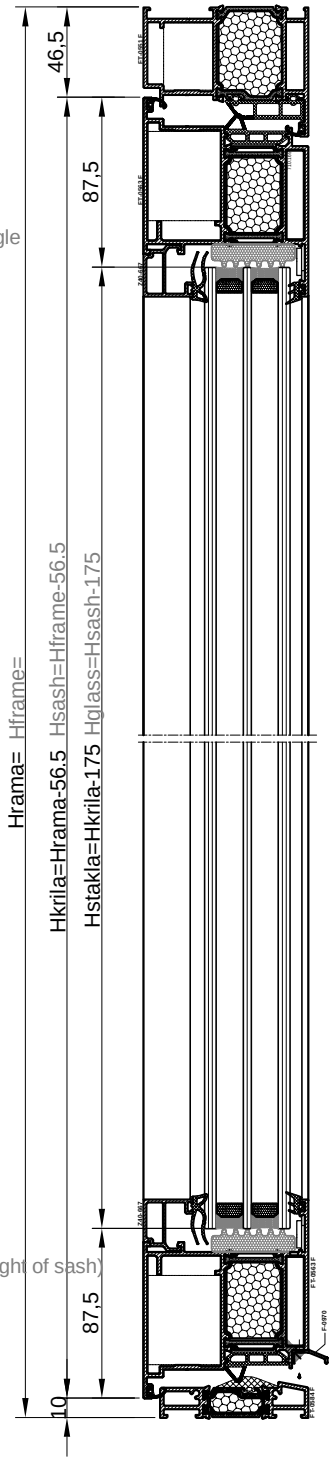
naziv name		mjera dimension	kom. pcs.	pilanje sawing angle
Ram FT-0551F	Frame FT-0551F	L	1	45-45
Ram FT-0551F	Frame FT-0551F	H	2	45-90
Krilo FT-0561F	Sash FT-0561F	(L/2)-49	4	45-45
Krilo FT-0561F	Sash FT-0561F	H-56.5	4	45-45
Prag FT-0584F	Threshold FT-0584F	L-164	1	90-90
Okapnica F-0970	Drip cap profile F-0970	Lkr-58	2	90-90
Staklo lajsna Z40-668	Glazing bead Z40-668	Lkr-141	4	90-90
Staklo lajsna Z40-668	Glazing bead Z40-668	Hkr-185	4	90-90
Profil kombatute FT-0571F	Flying mullion FT-0571F	Hkr-57	1	90-90
Kutna spojnica 710.143	Corner bracket 710.143		2	
Kutna spojnica 710.141	Corner bracket 710.141		10	
Kutna spojnica 710.136	Corner bracket 710.136		8	
Kutna spojnica 731.010	Corner bracket 731.010		8	
Kutna spojnica 730.001	Corner bracket 730.001		18	
Centralna brtva rama 338.004	Central gasket-frame 338.004	1L+3H		
Centralna brtva krila 338.006	Central gasket-sash 338.006	4Lkr+3Hkr		
Brtva na spoju rama i krila 317.002	Rebate gasket 317.002	1L+2H+4Lkr+5Hkr		
Brtva prema staklu vanjska 328.003	Glazing gasket -external- 328.003	4Lkr+4Hkr		
Brtva prema staklu unutarnja 311.004	Glazing gasket -internal- 311.004	4Lkr+4Hkr		
Brtva praga 331.012	Threshold gasket 331.012	L-164	1	90-90
Izolacijski umetak 340.013	Underglass insulator 340.013	4(Lkr.-131)+4(Hkr.-155)		
Čep okapnice F-0970 375.001	End cap for F-0970 375.001		2 para	
Umetak na pragu 363.103	End cap for threshold 363.103		1 par	
Čep kombatute 363.014	End cap for flying mullion 363.014		1 par	
Brava G-U Secury s MR2 (35) tri ključanja 122.016	Multipoint lock - G-U Secury MR2 (35) -122.016		1	
Brava G-U za pom. krilo (desna) 122.082	Lever-operated gear for passive leaf G-U (right) 122.082		1	
Gornji element za nastavljanje 122.026	Top shoot bolt unit 122.026		1	
Donji element za nastavljanje 122.027	Bottom shoot bolt unit 122.027		1	
Prihvatna pločica gore 122.065	Top striking plate 122.065		1	
Prihvatna pločica dolje 122.080	Bottom striking plate 122.080		1	
Trodijelna cilindrična šarka 112.011.01 - bijela	Barrel door hinge-3 part 112.011.01 - white	2 ili (3) po krilu ovisno o visini i tež.krila 2 or (3) per sash(dep. of height and weight of sash)		
Ručka za vrata 102.028	Door handle 102.028		2	
Četvrtka 102.025	Square spindle 102.025		1	
Cilindar (35-75) 122.095	Cylinder (35-75) 122.095		1	
Štitnik cilindra 122.098	Cylinder rosette 122.098		2	
Protuprovalni umetak 141.002	Security pin 141.002		4	
Staklo 40 mm	Glass 40 mm	(Lkr.-155)x(Hkr.-155)		2

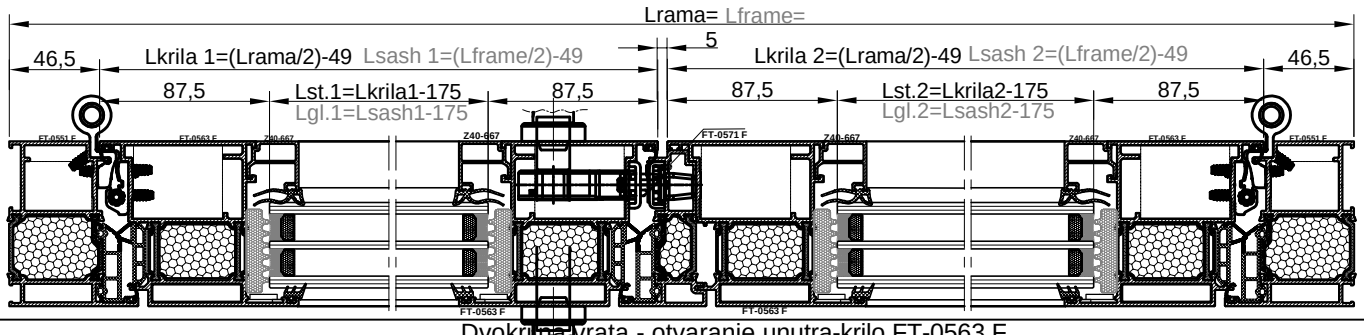




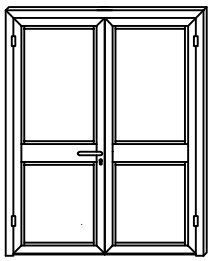


naziv name		mjera dimension	kom. pcs.	pilanje sawing angle
Ram FT-0551F	Frame FT-0551F	L	1	45-45
Ram FT-0551F	Frame FT-0551F	H	2	45-90
Krilo FT-0563F	Sash FT-0563F	(L/2)-49	4	45-45
Krilo FT-0563F	Sash FT-0563F	H-56.5	4	45-45
Prag FT-0584F	Threshold FT-0584F	L-164	1	90-90
Okapnica F-0970	Drip cap profile F-0970	Lkr-58	2	90-90
Staklo lajsna Z40-667	Glazing bead Z40-667	Lkr-161	4	90-90
Staklo lajsna Z40-667	Glazing bead Z40-667	Hkr-205	4	90-90
Profil kombatute FT-0571F	Flying mullion FT-0571F	Hkr-57	1	90-90
Kutna spojnica 710.143	Corner bracket 710.143		2	
Kutna spojnica 710.141	Corner bracket 710.141		2	
Kutna spojnica 710.136	Corner bracket 710.136		8	
Kutna spojnica 710.169	Corner bracket 710.169		8	
Kutna spojnica 731.010	Corner bracket 731.010		8	
Kutna spojnica 730.001	Corner bracket 730.001		18	
Centralna brtva rama 338.004	Central gasket-frame 338.004	1L+3H		
Centralna brtva krila 338.006	Central gasket-sash 338.006	4Lkr+3Hkr		
Brtva na spoju rama i krila 317.002	Rebate gasket 317.002	1L+2H+4Lkr+5Hkr		
Brtva prema staklu vanjska 328.003	Glazing gasket -external- 328.003	4Lkr+4Hkr		
Brtva prema staklu unutarnja 311.004	Glazing gasket -internal- 311.004	4Lkr+4Hkr		
Brtva praga 331.012	Threshold gasket 331.012	L-164	1	90-90
Izolacijski umetak 340.013	Underglass insulator 340.013	4(Lkr.-151)+4(Hkr.-175)		
Čep okapnice F-0970 375.001	End cap for F-0970 375.001		2 para	
Umetak na pragu 363.103	End cap for threshold 363.103		1 par	
Čep kombatute 363.014	End cap for flying mullion 363.014		1 par	
Brava G-U Secury s MR2 (45) tri ključanja 122.015	Multipoint lock - G-U Secury MR2 (45) -122.015		1	
Brava G-U za pom. krilo (desna) 122.082	Lever-operated gear for passive leaf G-U (right) 122.082		1	
Gornji element za nastavljanje 122.026	Top shoot bolt unit 122.026		1	
Donji element za nastavljanje 122.027	Bottom shoot bolt unit 122.027		1	
Prihvatna pločica gore 122.065	Top striking plate 122.065		1	
Prihvatna pločica dolje 122.080	Bottom striking plate 122.080		1	
Trodijelna cilindrična šarka 112.011.01 - bijela	Barrel door hinge-3 part 112.011.01- white	2 ili (3) po krilu ovisno o visini i tež.krila 2 or (3) per sash(dep. of height and weight of sash)		
Ručka za vrata 102.028	Door handle 102.028		2	
Četvrtka 102.025	Square spindle 102.025		1	
Cilindar (35-75) 122.095	Cylinder (35-75) 122.095		1	
Štitnik cilindra 122.098	Cylinder rosette 122.098		2	
Protuprovalni umetak 141.002	Security pin 141.002		4	
Staklo 44 mm	Glass 44 mm	(Lkr.-175)x(Hkr.-175)		2

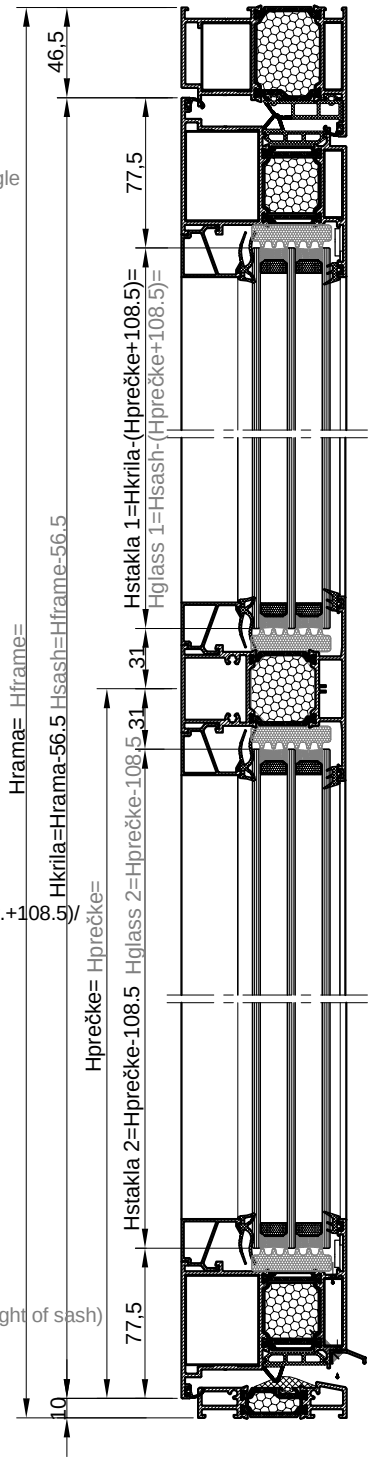


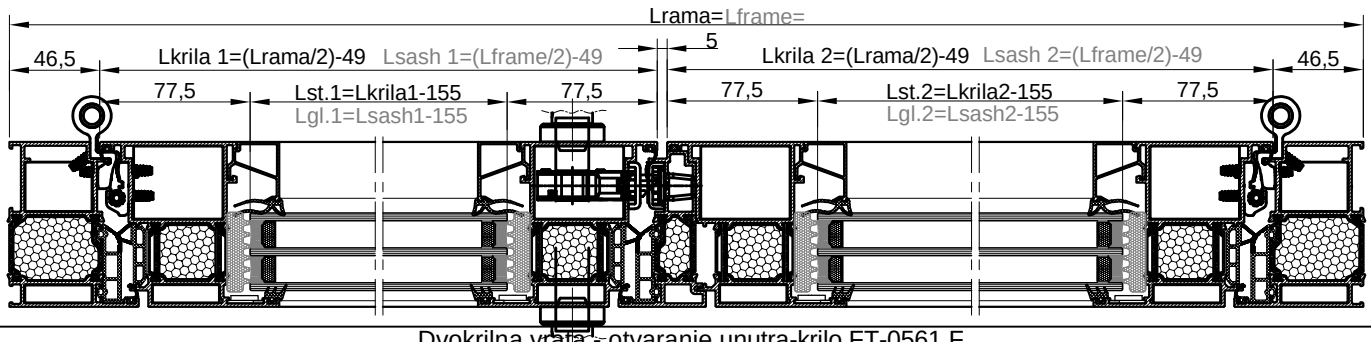


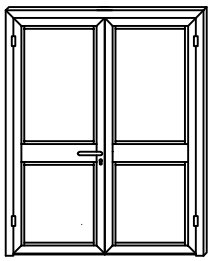
Dvokrilna vrata - otvaranje unutra-krilo FT-0563 F
Double-leaf door - inward opening-sash FT-0563 F



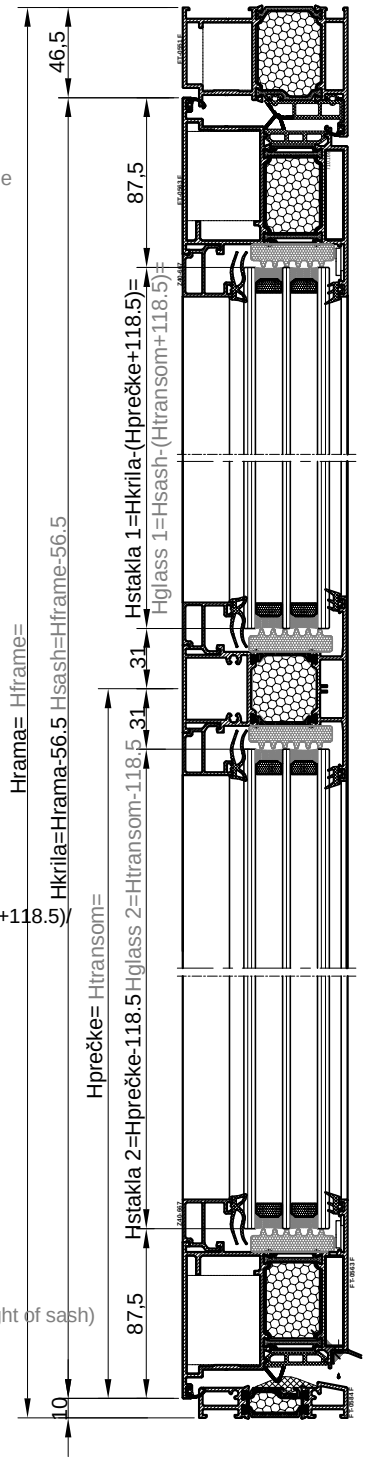
naziv name		mjera dimension	kom. pcs.	pilanje sawing angle
Ram FT-0551F	Frame FT-0551F	L	1	45-45
Ram FT-0551F	Frame FT-0551F	H	2	45-90
Krilo FT-0561F	Sash FT-0561F	(L/2)-49	4	45-45
Krilo FT-0561F	Sash FT-0561F	H-56.5	4	45-45
Prag FT-0584F	Threshold FT-0584F	L-164	1	90-90
Okapnica F-0970	Drip cap profile F-0970	Lkr-58	2	90-90
Staklo lajsna Z40-668	Glazing bead Z40-668	Lkr-141	8	90-90
Staklo lajsna Z40-668	Glazing bead Z40-668	Hpr.-137	4	90-90
Staklo lajsna Z40-668	Glazing bead Z40-668	H-(Hpr.+193.5)	4	90-90
Prečka FT-0575F	Transom FT-0575F	Lkr-128	2	90-90
Profil kombatute FT-0571F	Flying mullion FT-0571F	Hkr-57	1	90-90
Kutna spojnica 710.143	Corner bracket 710.143		2	
Kutna spojnica 710.141	Corner bracket 710.141		10	
Kutna spojnica 710.136	Corner bracket 710.136		8	
Kutna spojnica 731.010	Corner bracket 731.010		8	
Kutna spojnica 730.001	Corner bracket 730.001		18	
Veznik prečke 710.066	T bracket 710.066		8	
Veznik prečke 710.171	T bracket 710.171		8	
Centralna brtva rama 338.004	Central gasket-frame 338.004	1L+3H		
Centralna brtva krila 338.006	Central gasket-sash 338.006	4Lkr+3Hkr		
Brtva na spoju dva krila 317.002	Rebate gasket 317.002	1L+2H+4Lkr+4Hkr		
Brtva prema staklu vanjska 328.003	Glazing gasket -external- 328.003	8Lkr+4Hkr		
Brtva prema staklu unutarnja 311.004	Glazing gasket -internal-311.004	8Lkr+4Hkr		
Brtva praga 331.012	Threshold gasket 331.012	L-164	1	90-90
Izolacijski umetak 340.013	Underglass insulator 340.013	8(Lkr.-131)+4(Hpr.-108.5)+4/Hkr.-(Hpr.+108.5)/		
Čep okapnice F-0970 375.001	End cap for F-0970 375.001		2 para	
Umetak na pragu 363.103	End cap for threshold 363.103		1 par	
Čep kombatute 363.014	End cap for flying mullion 363.014		1 par	
Brava G-U Secury s MR2 (35) tri ključanja 122.016	Multipoint lock - G-U Secury MR2 (35) -122.016		1	
Brava G-U za pom. krilo (desna) 122.082	Lever-operated gear for passive leaf G-U (right) 122.082		1	
Gornji element za nastavljanje 122.026	Top shoot bolt unit 122.026		1	
Donji element za nastavljanje 122.027	Bottom shoot bolt unit 122.027		1	
Prihvatna pločica gore 122.065	Top striking plate 122.065		1	
Prihvatna pločica dolje 122.080	Bottom striking plate 122.080		1	
Trodijelna cilindrična šarka 112.011.01 - bijela	Barrel door hinge-3 part 112.011.01 - white	2 ili (3) po krilu ovisno o visini i tež.krila 2 or (3) per sash(dep. of height and weight of sash)		
Ručka za vrata 102.028	Door handle 102.028		2	
Četvrtka 102.025	Square spindle 102.025		1	
Cilindar (35-75) 122.095	Cylinder (35-75) 122.095		1	
Štitnik cilindra 122.098	Cylinder rosette 122.098		2	
Protuprovalni umetak 141.002	Security pin 141.002		4	
Staklo 40 mm	Glass 40 mm	(Lkr.-155)x(Hpr.-108.5)	2	
Staklo 40 mm	Glass 40 mm	(Lkr.-155)x/Hkr.-(Hpr.kr.+108.5)/	2	

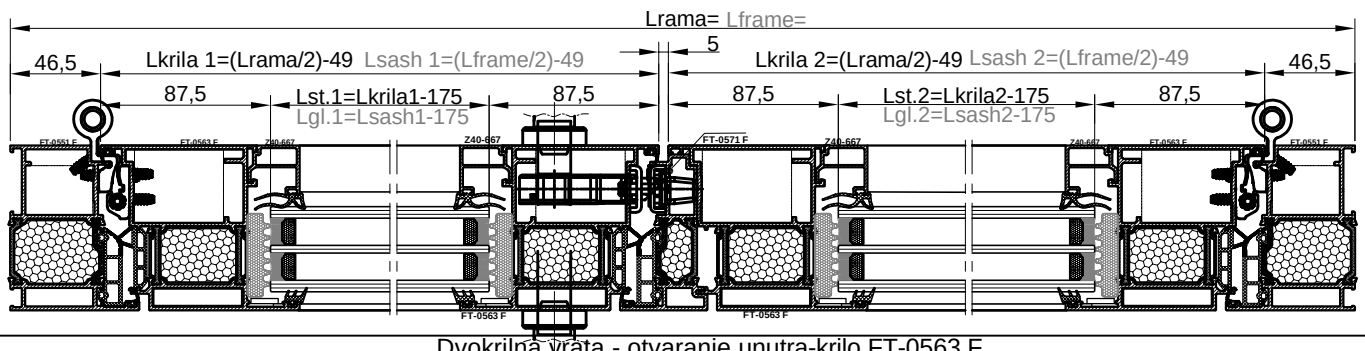




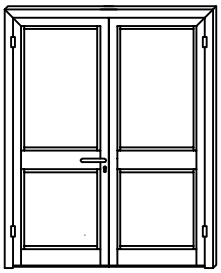


naziv name		mjera dimension	kom. pcs.	pilanje sawing angle
Ram FT-0551F	Frame FT-0551F	L	1	45-45
Ram FT-0551F	Frame FT-0551F	H	2	45-90
Krilo FT-0563F	Sash FT-0563F	(L/2)-49	4	45-45
Krilo FT-0563F	Sash FT-0563F	H-56.5	4	45-45
Prag FT-0584F	Threshold FT-0584F	L-164	1	90-90
Okapnica F-0970	Drip cap profile F-0970	Lkr-58	2	90-90
Staklo lajsna Z40-667	Glazing bead Z40-667	Lkr-161	8	90-90
Staklo lajsna Z40-667	Glazing bead Z40-667	Hpr.-147	4	90-90
Staklo lajsna Z40-667	Glazing bead Z40-667	H-(Hpr.+203.5)	4	90-90
Prečka FT-0575F	Transom FT-0575F	Lkr-151	2	90-90
Profil kombatute FT-0571F	Flying mullion FT-0571F	Hkr-57	1	90-90
Kutna spojnica 710.143	Corner bracket 710.143		2	
Kutna spojnica 710.141	Corner bracket 710.141		2	
Kutna spojnica 710.136	Corner bracket 710.136		8	
Kutna spojnica 710.169	Corner bracket 710.169		8	
Kutna spojnica 731.010	Corner bracket 731.010		8	
Kutna spojnica 730.001	Corner bracket 730.001		18	
Veznik prečke 710.066	T bracket 710.066		8	
Veznik prečke 710.171	T bracket 710.171		8	
Centralna brtva rama 338.004	Central gasket-frame 338.004	1L+3H		
Centralna brtva krila 338.006	Central gasket-sash 338.006	4Lkr+3Hkr		
Brtva na spoju dva krila 317.002	Rebate gasket 317.002	1L+2H+4Lkr+4Hkr		
Brtva prema staklu vanjska 328.003	Glazing gasket -external- 328.003	8Lkr+4Hkr		
Brtva prema staklu unutarnja 311.004	Glazing gasket -internal- 311.004	8Lkr+4Hkr		
Brtva praga 331.012	Threshold gasket 331.012	L-164	1	90-90
Izolacijski umetak 340.013	Underglass insulator 340.013	8(Lkr.-151)+4(Hpr.-118.5)+4/Hkr.-(Hpr.+118.5)/		
Čep okapnice F-0970 375.001	End cap for F-0970 375.001		2 para	
Umetak na pragu 363.103	End cap for threshold 363.103		1 par	
Čep kombatute 363.014	End cap for flying mullion 363.014		1 par	
Brava G-U Secury s MR2 (45) tri ključanja 122.015	Multipoint lock - G-U Secury MR2 (45) -122.015		1	
Brava G-U za pom. krilo (desna) 122.082	Lever-operated gear for passive leaf G-U (right) 122.082		1	
Gornji element za nastavljanje 122.026	Top shoot bolt unit 122.026		1	
Donji element za nastavljanje 122.027	Bottom shoot bolt unit 122.027		1	
Prihvatna pločica gore 122.065	Top striking plate 122.065		1	
Prihvatna pločica dolje 122.080	Bottom striking plate 122.080		1	
Trodijelna cilindrična šarka 112.011.01 - bijela	Barrel door hinge-3 part 112.011.01 - white	2 ili (3) po krilu ovisno o visini i tež.krila 2 or (3) per sash(dep. of height and weight of sash)		
Ručka za vrata 102.028	Door handle 102.028		2	
Četvrtka 102.025	Square spindle 102.025		1	
Cilindar (35-75) 122.095	Cylinder (35-75) 122.095		1	
Štitnik cilindra 122.098	Cylinder rosette 122.098		2	
Protuprovalni umetak 141.002	Security pin 141.002		4	
Staklo 40 mm	Glass 40 mm	(Lkr.-175)x(Hpr.-118.5)	2	
Staklo 40 mm	Glass 40 mm	(Lkr.-175)x/Hkr.-(Hpr.kr.+118.5)/	2	

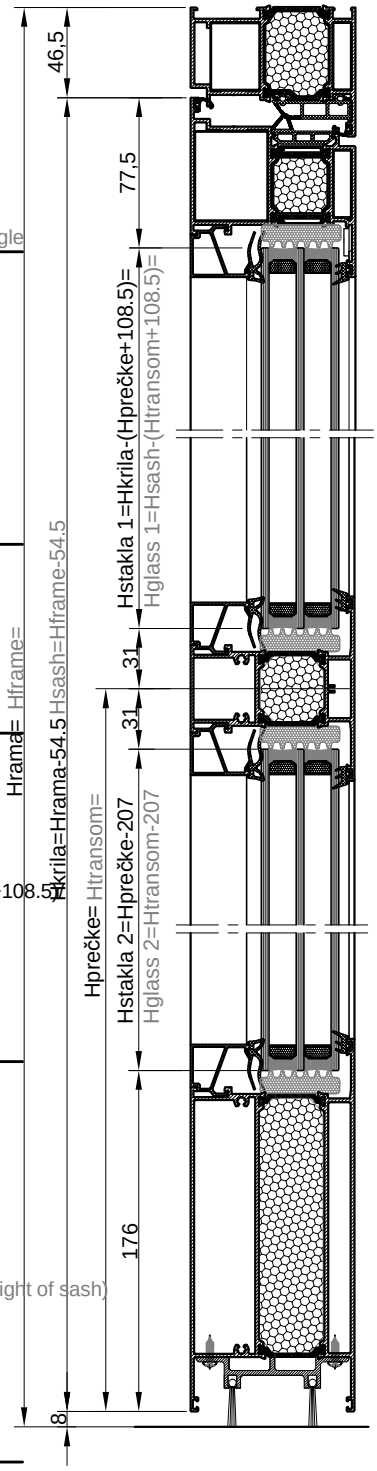


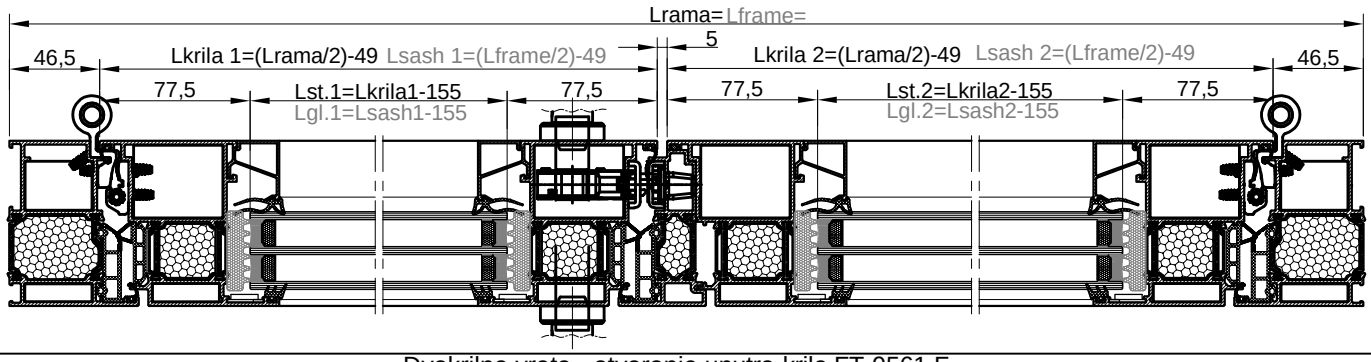


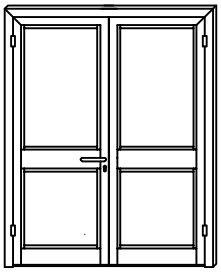
Dvokrilna vrata - otvaranje unutra-krilo FT-0563 F
Double-leaf door - inward opening-sash FT-0563 F



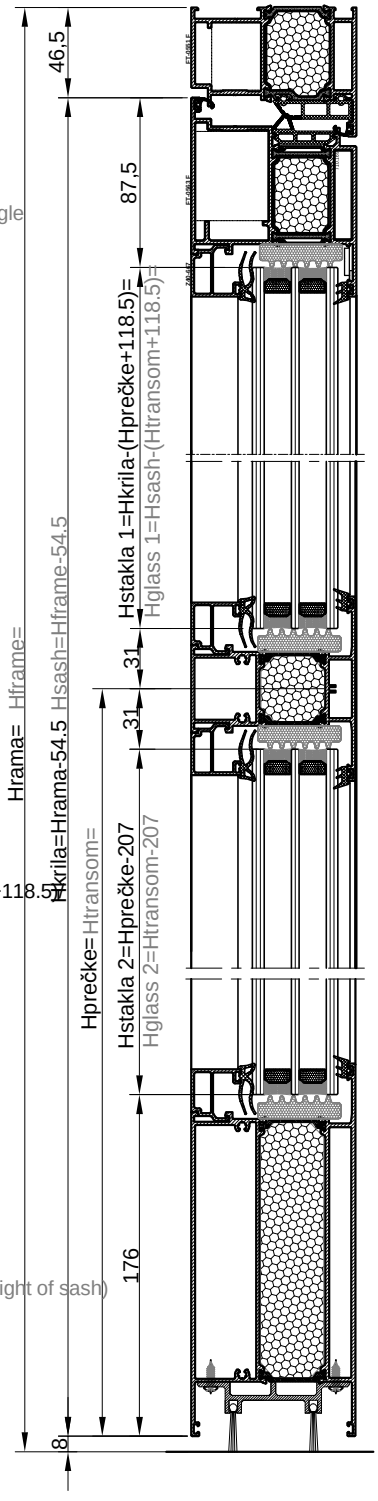
naziv name		mjera dimension	kom. pcs.	pilanje sawing angle
Ram FT-0551F	Frame FT-0551F	L	1	45-45
Ram FT-0551F	Frame FT-0551F	H	2	45-90
Krilo FT-0561F	Sash FT-0561F	(L/2)-49	2	45-45
Krilo FT-0561F	Sash FT-0561F	H-54.5	4	45-90
Staklo lajsna Z40-668	Glazing bead Z40-668	Lkr-141	8	90-90
Staklo lajsna Z40-668	Glazing bead Z40-668	Hpr.-233.5	4	90-90
Staklo lajsna Z40-668	Glazing bead Z40-668	H-(Hpr.+191.5)	4	90-90
Prečka FT-0575F	Transom FT-0575F	Lkr-128	2	90-90
Parapetna prečka FT-0576F	Tran.-bottom sash prof. FT-0576F	Lkr-128	2	90-90
Profil kombatute FT-0571F	Flying mullion FT-0571F	Hkr-28.5	1	90-90
Kutna spojnica 710.143	Corner bracket 710.143		2	
Kutna spojnica 710.141	Corner bracket 710.141		6	
Kutna spojnica 710.136	Corner bracket 710.136		4	
Kutna spojnica 731.010	Corner bracket 731.010		4	
Kutna spojnica 730.001	Corner bracket 730.001		10	
Veznik prečke 710.066	T bracket 710.066		16	
Veznik prečke 710.171	T bracket 710.171		16	
Centralna brtva rama 338.004	Central gasket-frame 338.004	1L+3H		
Centralna brtva krila 338.006	Central gasket-sash 338.006	2Lkr+3Hkr		
Brtva na spoju rama i krila 317.002	Rebate gasket 317.002	1L+2Lkr+4Hkr		
Brtva prema staklu vanjska 328.003	Glazing gasket -external- 328.003	8Lkr+4Hkr		
Brtva prema staklu unutarnja 311.004	Glazing gasket -internal- 311.004	8Lkr+4Hkr		
Izolacijski umetak 340.013	Underglass insulator 340.013	8(Lkr.-131)+4(Hpr.-207)+4/Hkr.-(Hpr.+108.5)		
Čep kombatute 363.014	End cap for flying mullion 363.014		1 par	
Pvc umetak u parap. prečki 374.048	Pvc prof. for transom /bottom sash prof./ 374.048	Lkr-18	1	
Pvc umetak u parap. prečki 374.048	Pvc prof. for transom /bottom sash prof./ 374.048	Lkr-33	1	
Četkasta brtva 347.001	Brush seal 347.001		4	
Brava G-U Secury s MR2 (35) tri ključanja 122.016	Multipoint lock - G-U Secury MR2 (35) -122.016		1	
Brava G-U za pom. krilo (desna) 122.082	Lever-operated gear for passive leaf G-U (right) 122.082		1	
Gornji element za nastavljanje 122.026	Top shoot bolt unit 122.026		1	
Donji element za nastavljanje 122.027	Bottom shoot bolt unit 122.027		1	
Prihvatna pločica gore 122.065	Top striking plate 122.065		1	
Podna čahura za osovinu Ø12 120.005	Brass floor socket (inside hole Ø12) 120.005		1	
Trodijelna cilindrična šarka 112.011.01 - bijela	Barrel door hinge-3 part 112.011.01 - white	2 ili (3) po krilu ovisno o visini i tež.krila 2 or (3) per sash(dep. of height and weight of sash)		
Ručka za vrata 102.028	Door handle 102.028		2	
Četvrtka 102.025	Square spindle 102.025		1	
Cilindar (35-75) 122.095	Cylinder (35-75) 122.095		1	
Štitnik cilindra 122.098	Cylinder rosette 122.098		2	
Protuprovalni umetak 141.002	Security pin 141.002		4	
Staklo 40 mm	Glass 40 mm	(Lkr.-155)x(Hpr.-207)	2	
Staklo 40 mm	Glass 40 mm	(Lkr.-155)x/Hkr.-(Hpr.kr.+108.5)/	2	

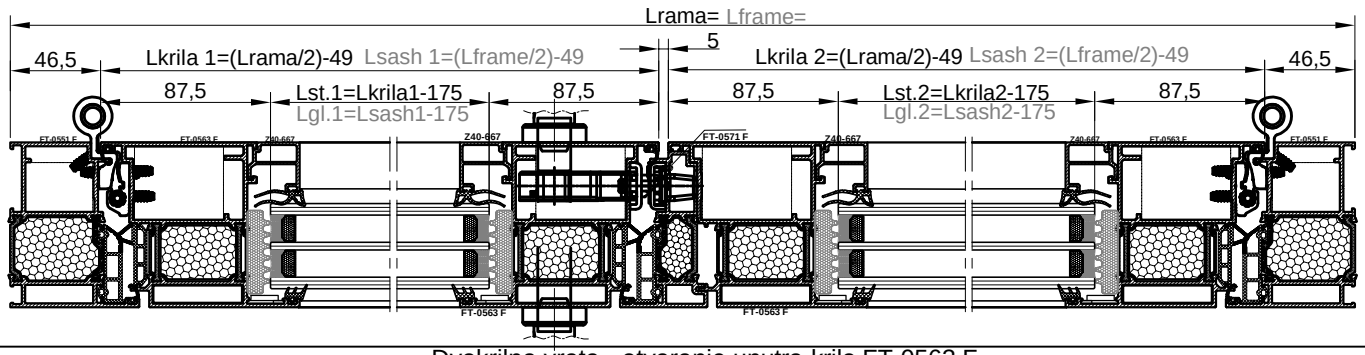


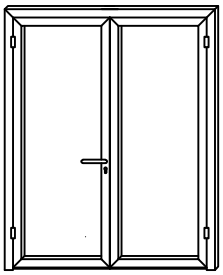




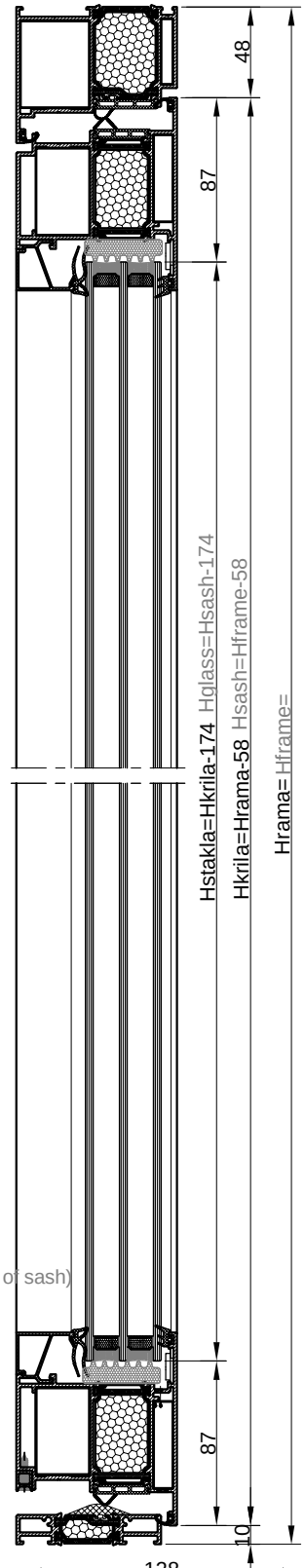
naziv name		mjera dimension	kom. pcs.	pilanje sawing angle
Ram FT-0551F	Frame FT-0551F	L	1	45-45
Ram FT-0551F	Frame FT-0551F	H	2	45-90
Krilo FT-0563F	Sash FT-0563F	(L/2)-49	2	45-45
Krilo FT-0563F	Sash FT-0563F	H-54.5	4	45-90
Staklo lajsna Z40-667	Glazing bead Z40-667	Lkr-161	8	90-90
Staklo lajsna Z40-667	Glazing bead Z40-667	Hpr.-233.5	4	90-90
Staklo lajsna Z40-667	Glazing bead Z40-667	H-(Hpr.+201.5)	4	90-90
Prečka FT-0575F	Transom FT-0575F	Lkr-151	2	90-90
Parapetna prečka FT-0576F	Tran.-bottom sash prof. FT-0576F	Lkr-151	2	90-90
Profil kombatute FT-0571F	Flying mullion FT-0571F	Hkr-28.5	1	90-90
Kutna spojnica 710.143	Corner bracket 710.143		2	
Kutna spojnica 710.141	Corner bracket 710.141		2	
Kutna spojnica 710.136	Corner bracket 710.136		4	
Kutna spojnica 710.169	Corner bracket 710.169		4	
Kutna spojnica 731.010	Corner bracket 731.010		4	
Kutna spojnica 730.001	Corner bracket 730.001		10	
Veznik prečke 710.066	T bracket 710.066		16	
Veznik prečke 710.171	T bracket 710.171		16	
Centralna brtva rama 338.004	Central gasket-frame 338.004	1L+3H		
Centralna brtva krila 338.006	Central gasket-sash 338.006	2Lkr+3Hkr		
Brtva na spoju rama i krila 317.002	Rebate gasket 317.002	1L+2Lkr+6Hkr		
Brtva prema staklu vanjska 328.003	Glazing gasket -external- 328.003	8Lkr+4Hkr		
Brtva prema staklu unutarnja 311.004	Glazing gasket -internal- 311.004	8Lkr+4Hkr		
Izolacijski umetak 340.013	Underglass insulator 340.013	8(Lkr.-151)+4(Hpr.-217)+4/Hkr.-(Hpr.+118.5)		
Čep kombatute 363.014	End cap for flying mullion 363.014		1 par	
Pvc umetak u parap. prečki 374.048	Pvc prof. for transom /bottom sash prof./ 374.048	Lkr-18	1	
Pvc umetak u parap. prečki 374.048	Pvc prof. for transom /bottom sash prof./374.048	Lkr-33	1	
Četkasta brtva 347.001	Brush seal 347.001		4	
Brava G-U Secury s MR2 (45) tri ključanja 122.015	Multipoint lock - G-U Secury MR2 (45) -122.015		1	
Brava G-U za pom. krilo (desna) 122.082	Lever-operated gear for passive leaf G-U (right) 122.082		1	
Gornji element za nastavljanje 122.026	Top shoot bolt unit 122.026		1	
Donji element za nastavljanje 122.027	Bottom shoot bolt unit 122.027		1	
Prihvatna pločica gore 122.065	Top striking plate 122.065		1	
Podna čahura za osovinu Ø12 120.005	Brass floor socket (inside hole Ø12) 120.005		1	
Trodijelna cilindrična šarka 112.011.01 - bijela	Barrel door hinge-3 part 112.011.01 - white	2 ili (3) po krilu ovisno o visini i tež.krila 2 or (3) per sash(dep. of height and weight of sash)		
Ručka za vrata 102.028	Door handle 102.028		2	
Četvrtka 102.025	Square spindle 102.025		1	
Cilindar (35-75) 122.095	Cylinder (35-75) 122.095		1	
Štitnik cilindra 122.098	Cylinder rosette 122.098		2	
Protuprovalni umetak 141.002	Security pin 141.002		4	
Staklo 44 mm	Glass 44 mm	(Lkr.-175)x(Hpr.-207)	2	
Staklo 44 mm	Glass 44 mm	(Lkr.-175)x/Hkr.-(Hpr.kr.+118.5)/	2	

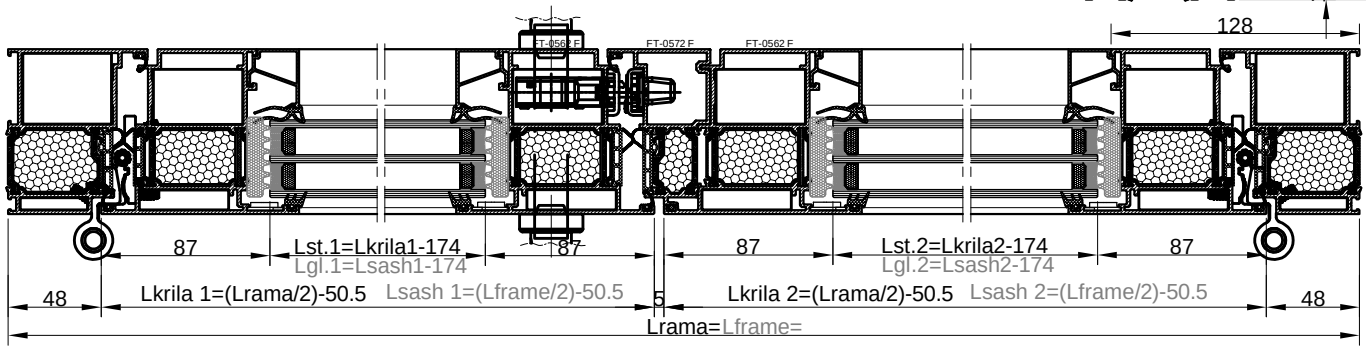


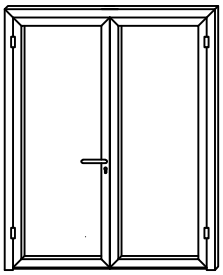




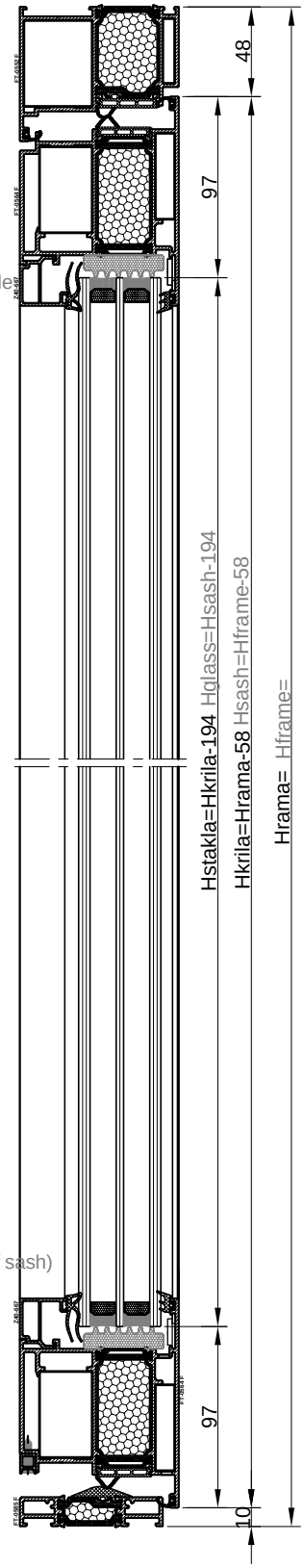
naziv name		mjera dimension	kom. pcs.	pilanje sawing angle
Ram FT-0552F	Frame FT-0552F	L	1	45-45
Ram FT-0552F	Frame FT-0552F	H	2	45-90
Krilo FT-0562F	Sash FT-0562F	(L/2)-50.5	4	45-45
Krilo FT-0562F	Sash FT-0562F	H-58	4	45-45
Prag FT-0585F	Threshold FT-0585F	L-154	1	90-90
Umetak F-1188	Additional profile F-1188	Lkr-58	2	90-90
Staklo lajsna Z40-668	Glazing bead Z40-668	Lkr-160	4	90-90
Staklo lajsna Z40-668	Glazing bead Z40-668	Hkr-204	4	90-90
Profil kombatute FT-0572F	Flying mullion FT-0572F	Hkr-65	1	90-90
Kutna spojnica 710.131	Corner bracket 710.131		2	
Kutna spojnica 710.133	Corner bracket 710.133		8	
Kutna spojnica 710.140	Corner bracket 710.140		2	
Kutna spojnica 710.134	Corner bracket 710.134		8	
Kutna spojnica 731.010	Corner bracket 731.010		8	
Kutna spojnica 730.001	Corner bracket 730.001		18	
Centralna brtva rama 338.009	Central gasket-frame 338.009	1Lrama+3Hkr		
Centralna brtva krila 338.010	Central gasket-sash 338.010	4Lkr+3Hkr		
Centralna brtva praga 331.012	Threshold gasket 331.012	L-154	1	90-90
Brtva prema staklu vanjska 328.003	Glazing gasket -external- 328.003	4Lkr+4Hkr		
Brtva prema staklu unutarnja 311.004	Glazing gasket -internal- 311.004	4Lkr+4Hkr		
Brtva na spoju rama i krila 317.002	Rebate gasket 317.002	1Lrama+4Lkr+6Hkr		
Izolacijski umetak 340.013	Underglass insulator 340.013	4(Lkr-150)+4(Hkr-174)		
Umetak na pragu 373.020	End cap for threshold 373.020		1 par	
Čep kombatute 363.016	End cap for flying mullion 363.016		1 par	
Brava G-U Secury s MR2 (35) tri ključanja 122.016	Multipoint lock - G-U Secury MR2 (35) -122.016		1	
Brava G-U za pom. krilo (lijeva) 122.025	Lever-operated gear for passive leaf G-U (left) 122.025		1	
Gornji element za nastavljanje 122.026	Top shoot bolt unit 122.026		1	
Donji element za nastavljanje 122.027	Bottom shoot bolt unit 122.027		1	
Prihvatna pločica gore 122.065	Top striking plate 122.065		1	
Prihvatna pločica dolje 122.080	Bottom striking plate 122.080		1	
Trodijelna cilindrična šarka 112.012.01 - bijela	Barrel door hinge-3 part 112.012.01 - white	2 ili (3) po krilu ovisno o visini i tež.krila 2 or (3) per sash(dep. of height and weight of sash)		
Ručka za vrata 102.028	Door handle 102.028		2	
Cilindar (35-75) 122.095	Cylinder (35-75) 122.095		1	
Štitnik cilindra 122.098	Cylinder rosette 122.098		2	
Protuprovalni umetak 141.002	Security pin 141.002		4	
Vijak 433.093	Screw 433.093		6	
Staklo 40 mm	Glass 40 mm	(Lkr.-174)x(Hkr.-174)	2	

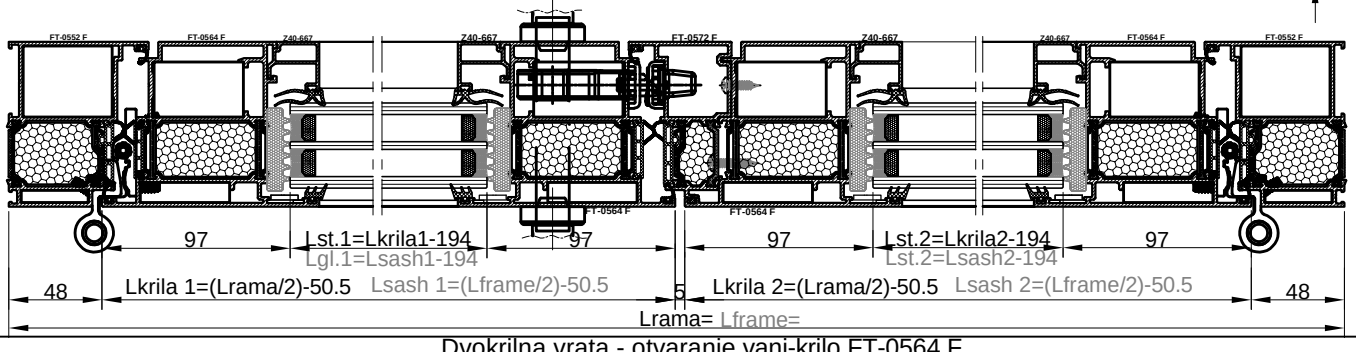


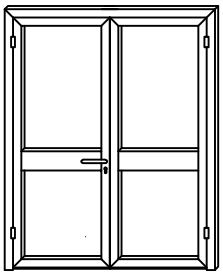




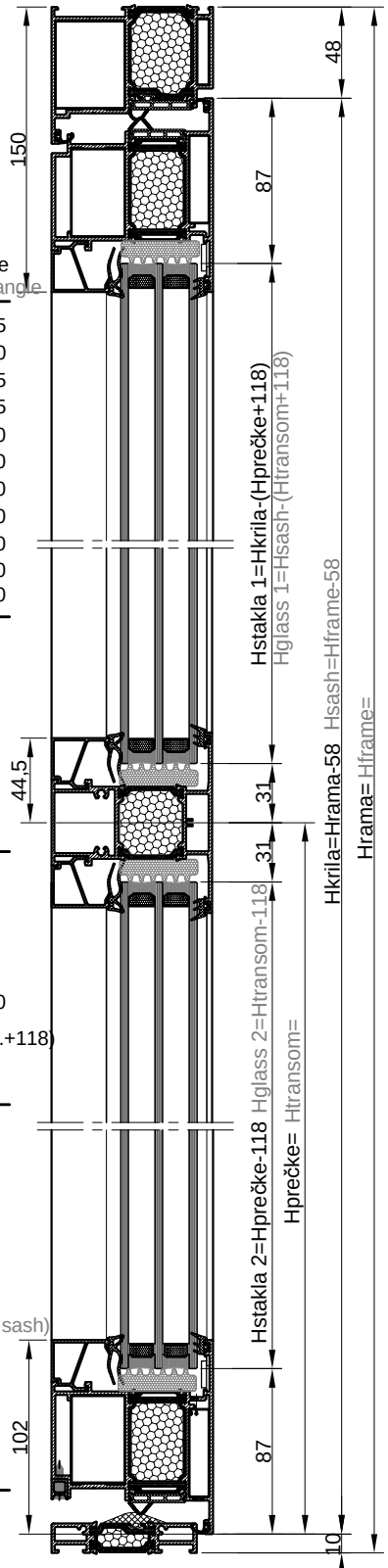
naziv name		mjera dimension	kom. pcs.	pilanje sawing angle
Ram FT-0552F	Frame FT-0552F	L	1	45-45
Ram FT-0552F	Frame FT-0552F	H	2	45-90
Krilo FT-0564F	Sash FT-0564F	(L/2)-50.5	4	45-45
Krilo FT-0564F	Sash FT-0564F	H-58	4	45-45
Prag FT-0585F	Threshold FT-0585F	L-154	1	90-90
Umetak F-1188	Additional profile F-1188	Lkr-58	2	90-90
Staklo lajsna Z40-667	Glazing bead Z40-667	Lkr-180	4	90-90
Staklo lajsna Z40-667	Glazing bead Z40-667	Hkr-224	4	90-90
Profil kombatute FT-0572F	Flying mullion FT-0572F	Hkr-65	1	90-90
Kutna spojnica 710.131	Corner bracket 710.131		2	
Kutna spojnica 710.133	Corner bracket 710.133		8	
Kutna spojnica 710.140	Corner bracket 710.140		2	
Kutna spojnica 710.134	Corner bracket 710.134		8	
Kutna spojnica 731.010	Corner bracket 731.010		8	
Kutna spojnica 730.001	Corner bracket 730.001		10	
Centralna brtva rama 338.009	Central gasket-frame 338.009	1Lrama+3Hkr		
Centralna brtva krila 338.010	Central gasket-sash 338.010	4Lkr+3Hkr		
Centralna brtva praga 331.012	Threshold gasket 331.012	L-154	1	90-90
Brtva prema staklu vanjska 328.003	Glazing gasket -external- 328.003	4Lkr+4Hkr		
Brtva prema staklu unutarnja 311.004	Glazing gasket -internal- 311.004	4Lkr+4Hkr		
Brtva na spoju rama i krila 317.002	Rebate gasket 317.002	1Lrama+4Lkr+6Hkr		
Izolacijski umetak 340.013	Underglass insulator 340.013	4(Lkr-170)+4(Hkr-194)		
Umetak na pragu 373.020	End cap for threshold 373.020		1 par	
Čep kombatute 363.016	End cap for flying mullion 363.016		1 par	
Brava G-U Secury s MR2 (45) tri ključanja 122.015	Multipoint lock - G-U Secury MR2 (45) -122.015		1	
Brava G-U za pom. krilo (lijeva) 122.025	Lever-operated gear for passive leaf G-U (left) 122.025		1	
Gornji element za nastavljanje 122.026	Top shoot bolt unit 122.026		1	
Donji element za nastavljanje 122.027	Bottom shoot bolt unit 122.027		1	
Prihvatna pločica gore 122.065	Top striking plate 122.065		1	
Prihvatna pločica dolje 122.080	Bottom striking plate 122.080		1	
Trodijelna cilindrična šarka 112.012.01 - bijela	Barrel door hinge-3 part 112.012.01 - white	2 ili (3) po krilu ovisno o visini i tež.krila 2 or (3) per sash(dep. of height and weight of sash)		
Ručka za vrata 102.028	Door handle 102.028		2	
Četvrtka 102.025	Square spindle 102.025		1	
Cilindar (35-75) 122.095	Cylinder (35-75) 122.095		1	
Štitnik cilindra 122.098	Cylinder rosette 122.098		2	
Protuprovalni umetak 141.002	Security pin 141.002		4	

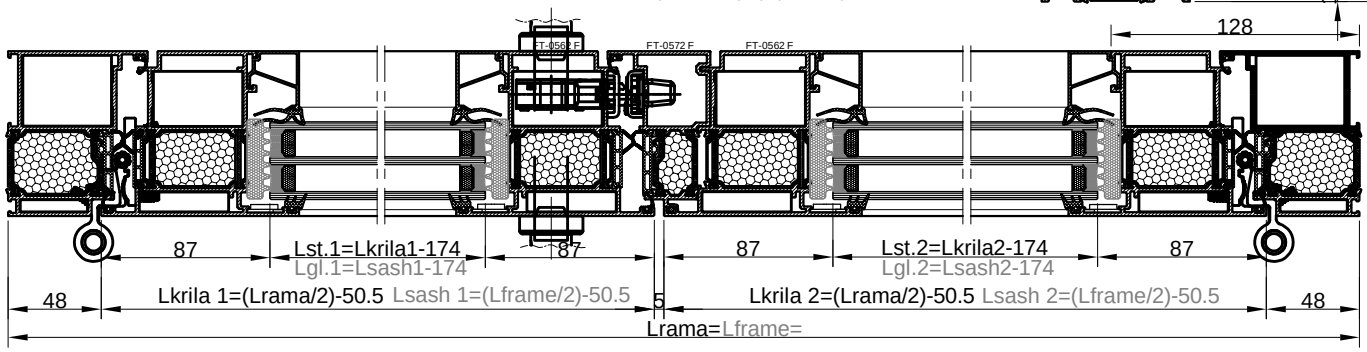


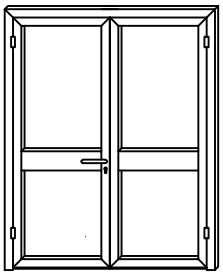




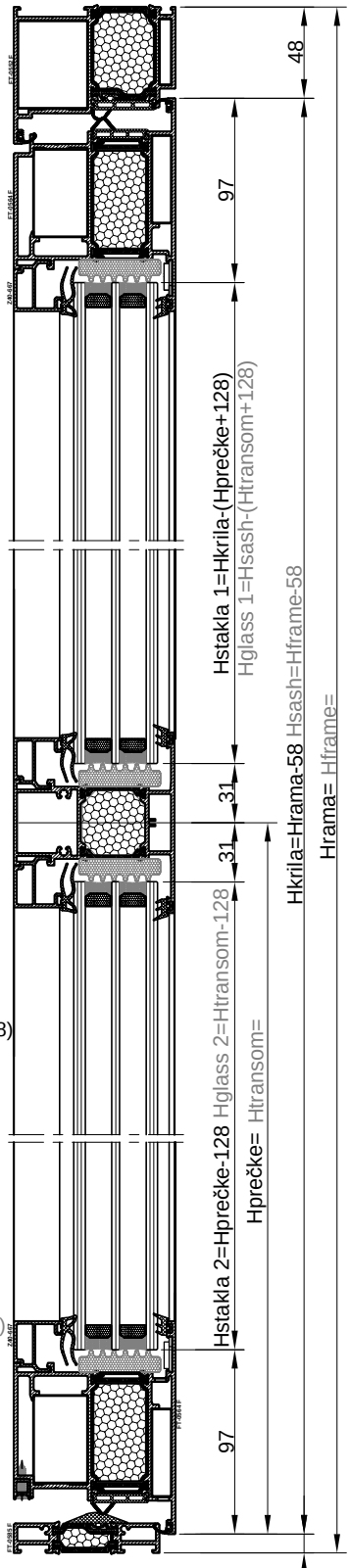
naziv name		mjera dimension	kom. pcs.	pilanje sawing angle
Ram FT-0552F	Frame FT-0552F	L	1	45-45
Ram FT-0552F	Frame FT-0552F	H	2	45-90
Krilo FT-0562F	Sash FT-0562F	L/2-50.5	4	45-45
Krilo FT-0562F	Sash FT-0562F	H-58	4	45-45
Prag FT-0585F	Threshold FT-0585F	L-154	1	90-90
Umetak F-1188	Additional profile F-1188	Lkr-58	2	90-90
Staklo lajsna Z40-668	Glazing bead Z40-668	Lkr-160	8	90-90
Staklo lajsna Z40-668	Glazing bead Z40-668	Hpr.-146.5	4	90-90
Staklo lajsna Z40-668	Glazing bead Z40-668	H-(Hpr.+204.5)	4	90-90
Prečka FT-0575F	Transom FT-0575F	Lkr-147	2	90-90
Profil kombatute FT-0572F	Flying mullion FT-0572F	Hkr-65	1	90-90
Kutna spojnica 710.131	Corner bracket 710.131		2	
Kutna spojnica 710.133	Corner bracket 710.133		8	
Kutna spojnica 710.140	Corner bracket 710.140		2	
Kutna spojnica 710.134	Corner bracket 710.134		8	
Kutna spojnica 731.010	Corner bracket 731.010		8	
Kutna spojnica 730.001	Corner bracket 730.001		18	
Veznik prečke 710.066	T bracket 710.066		8	
Veznik prečke 710.171	T bracket 710.171		8	
Centralna brtva rama 338.009	Central gasket-frame 338.009	1Lrama+3Hrama		
Centralna brtva krila 338.010	Central gasket-sash 338.010	4Lkr+3Hkr		
Brtva prema staklu vanjska 328.003	Glazing gasket -external- 328.003	8Lkr+4Hkr		
Brtva prema staklu unutarnja 311.004	Glazing gasket -internal- 311.004	8Lkr+4Hkr		
Brtva na spoju rama i krila 317.002	Rebate gasket 317.002	1Lrama+2Hrama+4Lkr+4Hkr		
Brtva praga 331.012	Threshold gasket 331.012	L-154	1	90-90
Izolacijski umetak 340.013	Underglass insulator 340.013	8(Lkr.-150)+4(Hpr.-118)+4/Hkr.-(Hpr.+118)		
Umetak na pragu 373.020	End cap for threshold 373.020		1 par	
Čep kombatute 363.016	End cap for flying mullion 363.016		1 par	
Brava G-U Secury s MR2 (35) tri ključanja 122.016	Multipoint lock - G-U Secury MR2 (35) -122.016		1	
Brava G-U za pom. krilo (lijeva) 122.025	Lever-operated gear for passive leaf G-U (left) 122.025		1	
Gornji element za nastavljanje 122.026	Top shoot bolt unit 122.026		1	
Donji element za nastavljanje 122.027	Bottom shoot bolt unit 122.027		1	
Prihvatna pločica gore 122.065	Top striking plate 122.065		1	
Prihvatna pločica dolje 122.080	Bottom striking plate 122.080		1	
Trodijelna cilindrična šarka 112.012.01 - bijela	Barrel door hinge-3 part 112.012.01 - white	2 ili (3) po krilu ovisno o visini i tež.krila 2 or (3) per sash(dep. of height and weight of sash)		
Ručka za vrata 102.028	Door handle 102.028		2	
Četvrtka 102.025	Square spindle 102.025		1	
Cilindar (35-75) 122.095	Cylinder (35-75) 122.095		1	
Štitnik cilindra 122.098	Cylinder rosette 122.098		2	
Protuprovalni umetak 141.002	Security pin 141.002		4	
Staklo 40 mm	Glass 40 mm	(Lkr.-174)x/Hkr.-(Hpr.+118)/	2	
Staklo 40 mm	Glass 40 mm	(Lkr.-174)x(Hpr.-118)	2	

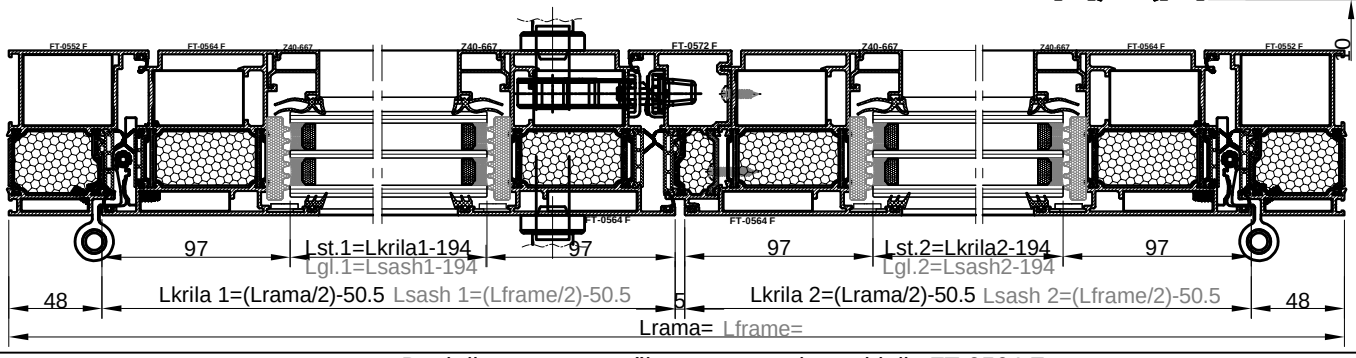


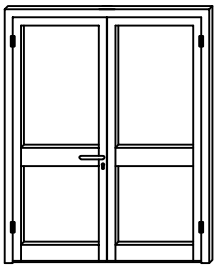




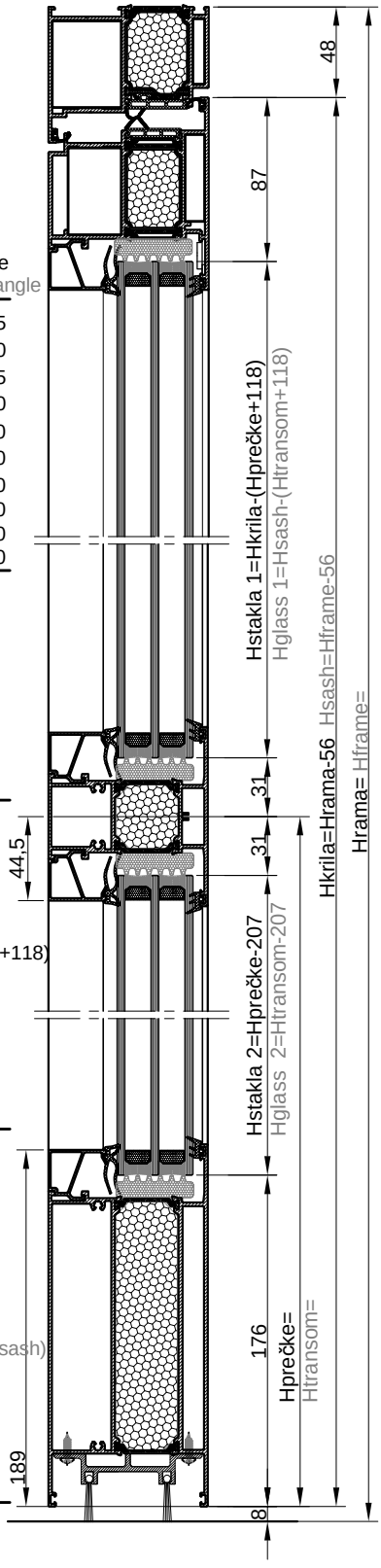
naziv name		mjera dimension	kom. pcs.	pilanje sawing angle
Ram FT-0552F	Frame FT-0552F	L	1	45-45
Ram FT-0552F	Frame FT-0552F	H	2	45-90
Krilo FT-0564F	Sash FT-0564F	L/2-50.5	4	45-45
Krilo FT-0564F	Sash FT-0564F	H-58	4	45-45
Prag FT-0585F	Threshold FT-0585F	L-154	1	90-90
Umetak F-1188	Additional profile F-1188	Lkr-58	2	90-90
Staklo lajsna Z40-667	Glazing bead Z40-667	Lkr-180	8	90-90
Staklo lajsna Z40-667	Glazing bead Z40-667	Hpr.-156.5	4	90-90
Staklo lajsna Z40-667	Glazing bead Z40-667	H-(Hpr.+214.5)	4	90-90
Prečka FT-0575F	Transom FT-0575F	Lkr-167	2	90-90
Profil kombatute FT-0572F	Flying mullion FT-0572F	Hkr-65	1	90-90
Kutna spojnica 710.131	Corner bracket 710.131		2	
Kutna spojnica 710.133	Corner bracket 710.133		8	
Kutna spojnica 710.140	Corner bracket 710.140		2	
Kutna spojnica 710.134	Corner bracket 710.134		8	
Kutna spojnica 731.010	Corner bracket 731.010		8	
Kutna spojnica 730.001	Corner bracket 730.001		18	
Veznik prečke 710.066	T bracket 710.066		8	
Veznik prečke 710.171	T bracket 710.171		8	
Centralna brtva rama 338.009	Central gasket-frame 338.009	1Lrama+3Hrama		
Centralna brtva krila 338.010	Central gasket-sash 338.010	4Lkr+3Hkr		
Brtva prema staklu vanjska 328.003	Glazing gasket -external- 328.003	8Lkr+4Hkr		
Brtva prema staklu unutarnja 311.004	Glazing gasket -internal- 311.004	8Lkr+4Hkr		
Brtva na spoju rama i krila 317.002	Rebate gasket 317.002	1Lrama+2Hrama+4Lkr+4Hkr		
Brtva praga 331.012	Threshold gasket 331.012	L-154	1	90-90
Izolacijski umetak 340.013	Underglass insulator 340.013	8(Lkr.-170)+4(Hpr.-128)+4/Hkr.-(Hpr.+128)		
Umetak na pragu 373.020	End cap for threshold 373.020		1 par	
Čep kombatute 363.016	End cap for flying mullion 363.016		1 par	
Brava G-U Secury s MR2 (45) tri ključanja 122.015	Multipoint lock - G-U Secury MR2 (45) -122.015		1	
Brava G-U za pom. krilo (lijeva) 122.025	Lever-operated gear for passive leaf G-U (left) 122.025		1	
Gornji element za nastavljanje 122.026	Top shoot bolt unit 122.026		1	
Donji element za nastavljanje 122.027	Bottom shoot bolt unit 122.027		1	
Prihvatna pločica gore 122.065	Top striking plate 122.065		1	
Prihvatna pločica dolje 122.080	Bottom striking plate 122.080		1	
Trodijelna cilindrična šarka 112.012.01 - bijela	Barrel door hinge-3 part 112.012.01 - white	2 ili (3) po krilu ovisno o visini i tež.krila 2 or (3) per sash(dep. of height and weight of sash)		
Ručka za vrata 102.028	Door handle 102.028		2	
Četvrtka 102.025	Square spindle 102.025		1	
Cilindar (35-75) 122.095	Cylinder (35-75) 122.095		1	
Štitnik cilindra 122.098	Cylinder rosette 122.098		2	
Protuprovalni umetak 141.002	Security pin 141.002		4	
Staklo 44 mm	Glass 44 mm	(Lkr.-194)x/Hkr.-(Hpr.+128)/	2	
Staklo 44 mm	Glass 44 mm	(Lkr.-194)x(Hpr.-128)	2	

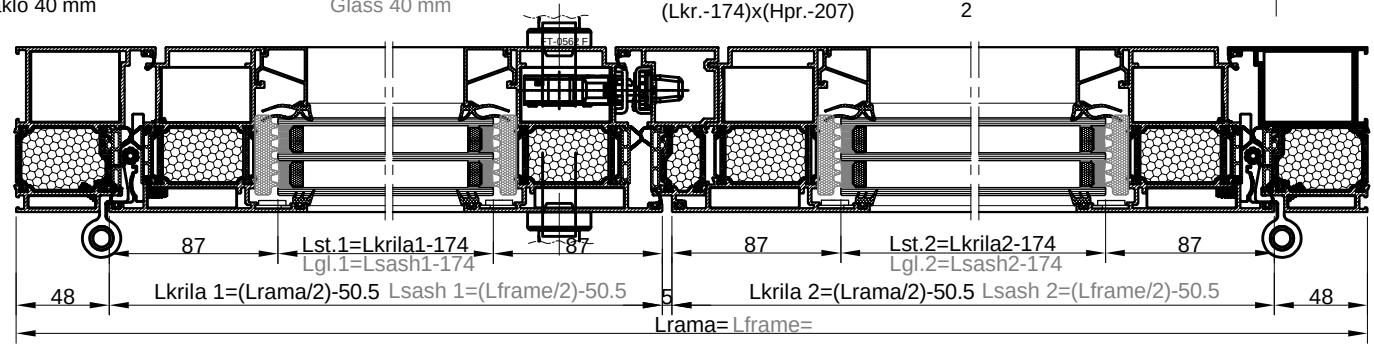


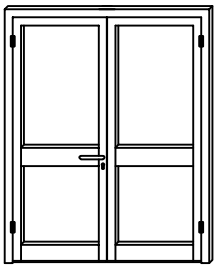




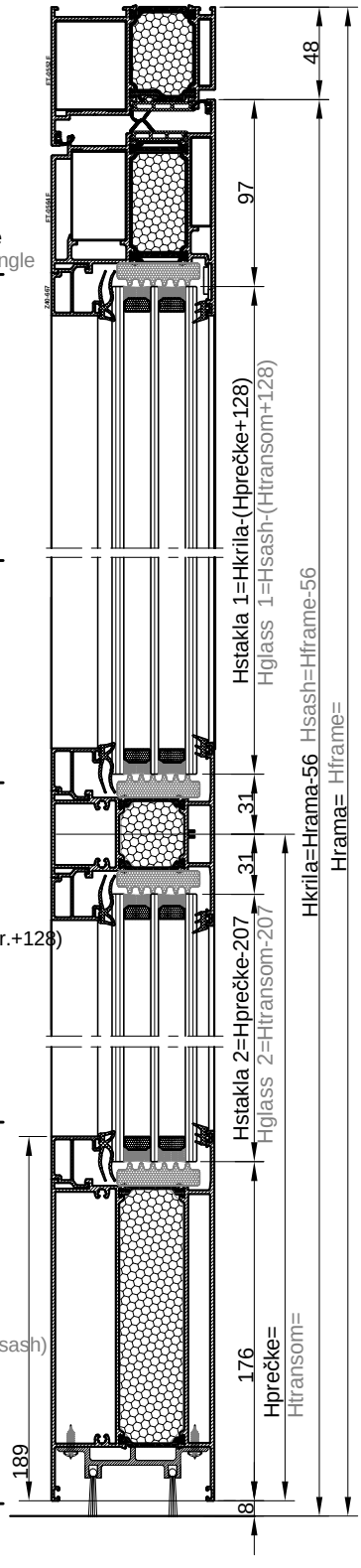
naziv name		mjera dimension	kom. pcs.	pilanje sawing angle
Ram FT-0552F	Frame FT-0552F	L	1	45-45
Ram FT-0552F	Frame FT-0552F	H	2	45-90
Krilo FT-0562F	Sash FT-0562F	L/2-50.5	2	45-45
Krilo FT-0562F	Sash FT-0562F	H-56	4	45-90
Staklo lajsna Z40-668	Glazing bead Z40-668	Lkr-160	8	90-90
Staklo lajsna Z40-668	Glazing bead Z40-668	Hpr.-233.5	4	90-90
Staklo lajsna Z40-668	Glazing bead Z40-668	H-(Hpr.+202.5)	4	90-90
Prečka FT-0575F	Transom FT-0575F	Lkr-147	2	90-90
Parapetna prečka FT-0576F	Tran.-bottom sash prof. FT-0576F	Lkr-147	2	90-90
Profil kombatute FT-0572F	Flying mullion FT-0572F	Hkr-32.5	1	90-90
Kutna spojnica 710.131	Corner bracket 710.131		2	
Kutna spojnica 710.133	Corner bracket 710.133		4	
Kutna spojnica 710.140	Corner bracket 710.140		2	
Kutna spojnica 710.134	Corner bracket 710.134		4	
Kutna spojnica 731.010	Corner bracket 731.010		4	
Kutna spojnica 730.001	Corner bracket 730.001		10	
Veznik prečke 710.066	T bracket 710.066		16	
Veznik prečke 710.171	T bracket 710.171		16	
Centralna brtva rama 338.009	Central gasket-frame 338.009	1Lrama+3Hrama		
Centralna brtva krila 338.010	Central gasket-sash 338.010	2Lkrila+3Hkrila		
Brtva prema staklu vanjska 328.003	Glazing gasket -external- 328.003	8Lk+4Hkr		
Brtva prema staklu unutarnja 311.004	Glazing gasket -internal- 311.004	8Lkr+4Hkr		
Brtva na spoju rama i krila 317.002	Rebate gasket 317.002	1Lrama+2Lkr+6Hkr		
Izolacijski umetak 340.013	Underglass insulator 340.013	8(Lkr.-150)+4(Hpr.-207)+4/Hkr.-(Hpr.+118)		
Čep kombatute 363.016	End cap for flying mullion 363.016		1 par	
Pvc umetak u parap. prečki 374.048	Pvc profile for transom /bottom sash profile/ 374.048	Lkr-19	1	
Pvc umetak u parap. prečki 374.048	Pvc profile for transom /bottom sash profile/ 374.048	Lkr-54	1	
Četkasta brtva 347.001	Brush seal 347.001		4	
Brava G-U Secury s MR2 (35) tri ključanja 122.016	Multipoint lock - G-U Secury MR2 (35) -122.016		1	
Brava G-U za pom. krilo (lijeva) 122.025	Lever-operated gear for passive leaf G-U (left) 122.025		1	
Gornji element za nastavljanje 122.026	Top shoot bolt unit 122.026		1	
Donji element za nastavljanje 122.027	Bottom shoot bolt unit 122.027		1	
Prihvatna pločica gore 122.065	Top striking plate 122.065		1	
Podna čahura za Ø12 120.005	Brass floor socket (inside hole Ø12) 120.005		1	
Trodijelna cilindrična šarka 112.012.01 - bijela	Barrel door hinge-3 part 112.012.01 - white	2 ili (3) po krilu ovisno o visini i tež.krila 2 or (3) per sash(dep. of height and weight of sash)		
Ručka za vrata 102.028	Door handle 102.028		2	
Četvrtka 102.025	Square spindle 102.025		1	
Cilindar (35-75) 122.095	Cylinder (35-75) 122.095		1	
Štitnik cilindra 122.098	Cylinder rosette 122.098		2	
Protuprovalni umetak 141.002	Security pin 141.002		4	
Staklo 40 mm	Glass 40 mm	(Lkr.-174)x/Hkr.-(Hpr.+118)/	2	
Staklo 40 mm	Glass 40 mm	(Lkr.-174)x(Hpr.-207)	2	

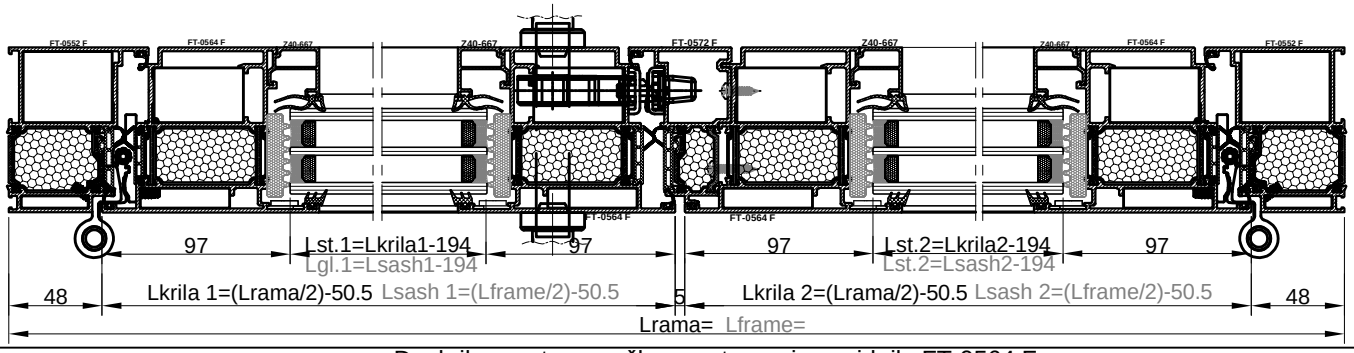


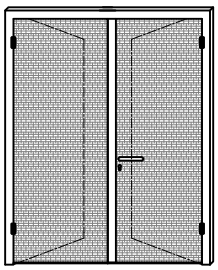




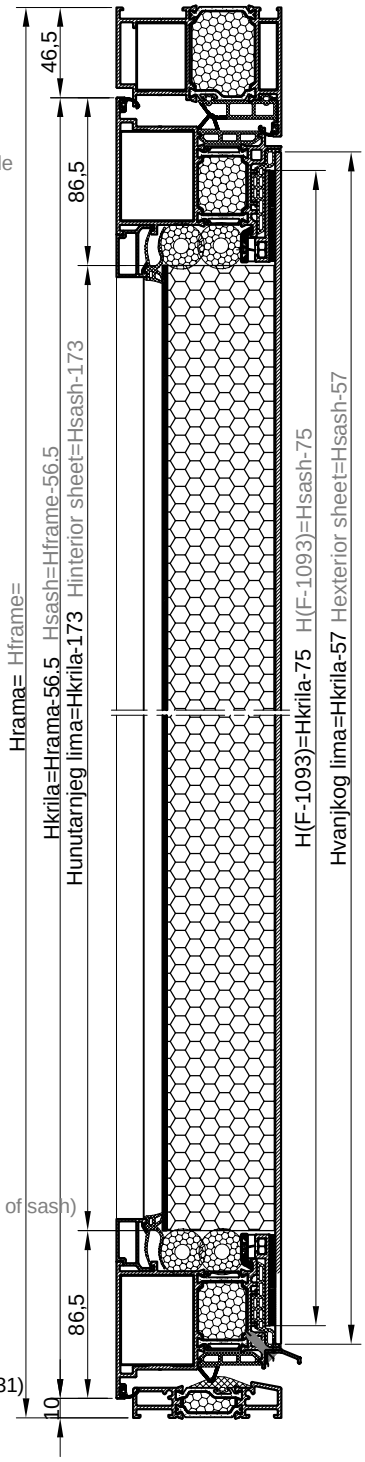
naziv name		mjera dimension	kom. pcs.	pilanje sawing angle
Ram FT-0552F	Frame FT-0552F	L	1	45-45
Ram FT-0552F	Frame FT-0552F	H	2	45-90
Krilo FT-0564F	Sash FT-0564F	L/2-50.5	2	45-45
Krilo FT-0564F	Sash FT-0564F	H-56	4	45-90
Staklo lajsna Z40-667	Glazing bead Z40-667	Lkr-180	8	90-90
Staklo lajsna Z40-667	Glazing bead Z40-667	Hpr.-233.5	4	90-90
Staklo lajsna Z40-667	Glazing bead Z40-667	H-(Hpr.+212.5)	4	90-90
Prečka FT-0575F	Transom FT-0575F	Lkr-167	2	90-90
Parapetna prečka FT-0576F	Transom-bottom sash prof. FT-0576F	Lkr-167	2	90-90
Profil kombatute FT-0572F	Flying mullion FT-0572F	Hkr-32.5	1	90-90
Kutna spojnica 710.131	Corner bracket 710.131		2	
Kutna spojnica 710.133	Corner bracket 710.133		4	
Kutna spojnica 710.140	Corner bracket 710.140		2	
Kutna spojnica 710.134	Corner bracket 710.134		4	
Kutna spojnica 731.010	Corner bracket 731.010		4	
Kutna spojnica 730.001	Corner bracket 730.001		10	
Veznik prečke 710.066	T bracket 710.066		16	
Veznik prečke 710.171	T bracket 710.171		16	
Centralna brtva rama 338.009	Central gasket-frame 338.009	1Lrama+3Hrama		
Centralna brtva krila 338.010	Central gasket-sash 338.010	2Lkrila+3Hkrila		
Brtva prema staklu vanjska 328.003	Glazing gasket -external- 328.003	8Lk+4Hkr		
Brtva prema staklu unutarnja 311.004	Glazing gasket -internal- 311.004	8Lkr+4Hkr		
Brtva na spoju rama i krila 317.002	Rebate gasket 317.002	1Lrama+2Lkr+6Hkr		
Izolacijski umetak 340.013	Underglass insulator 340.013	8(Lkr.-170)+4(Hpr.-207)+4/Hkr.-(Hpr.+128)		
Čep kombatute 363.016	End cap for flying mullion 363.016		1 par	
Pvc umetak u parap. prečki 374.048	Pvc profile for transom /bottom sash profile/ 374.048	Lkr-19	1	
Pvc umetak u parap. prečki 374.048	Pvc profile for transom /bottom sash profile/ 374.048	Lkr-54	1	
Četkasta brtva 347.001	Brush seal 347.001		4 Lkr	
Brava G-U Secury s MR2 (45) tri ključanja 122.015	Multipoint lock - G-U Secury MR2 (45) -122.015		1	
Brava G-U za pom. krilo (lijeva) 122.025	Lever-operated gear for passive leaf G-U (left) 122.025		1	
Gornji element za nastavljanje 122.026	Top shoot bolt unit 122.026		1	
Donji element za nastavljanje 122.027	Bottom shoot bolt unit 122.027		1	
Prihvatna pločica gore 122.065	Top striking plate 122.065		1	
Podna čahura za Ø12 120.005	Brass floor socket (inside hole Ø12) 120.005		1	
Trodijelna cilindrična šarka 112.012.01 - bijela	Barrel door hinge-3 part 112.012.01 - bijela	2 ili (3) po krilu ovisno o visini i tež.krila 2 or (3) per sash(dep. of height and weight of sash)		
Ručka za vrata 102.028	Door handle 102.028		2	
Četvrtka 102.025	Square spindle 102.025		1	
Cilindar (35-75) 122.095	Cylinder (35-75) 122.095		1	
Štitnik cilindra 122.098	Cylinder rosette 122.098		2	
Protuprovalni umetak 141.002	Security pin 141.002		4	
Staklo 44 mm	Glass 44 mm	(Lkr.-194)x/Hkr.-(Hpr.+128)/	2	
Staklo 44 mm	Glass 44 mm	(Lkr.-194)x(Hpr.-207)	2	

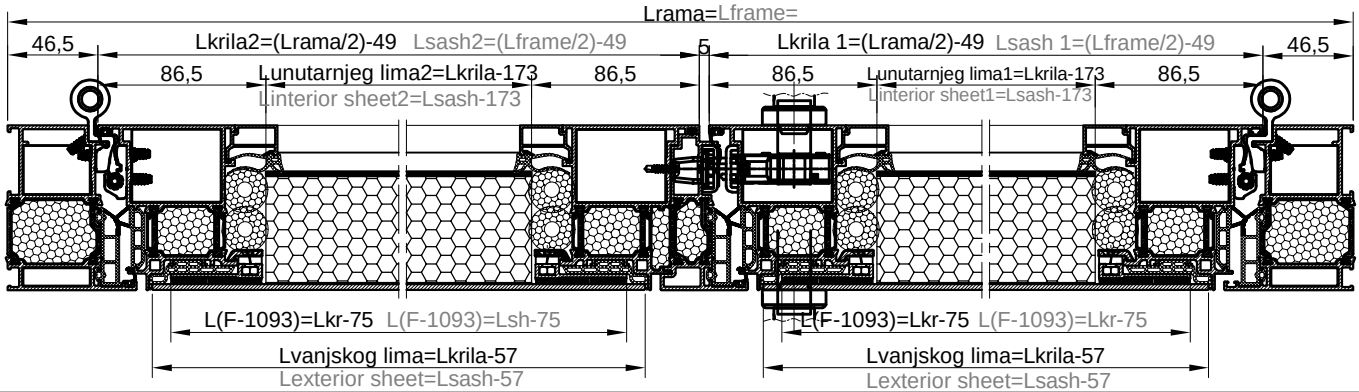


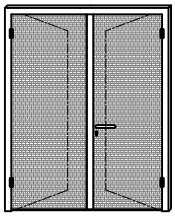




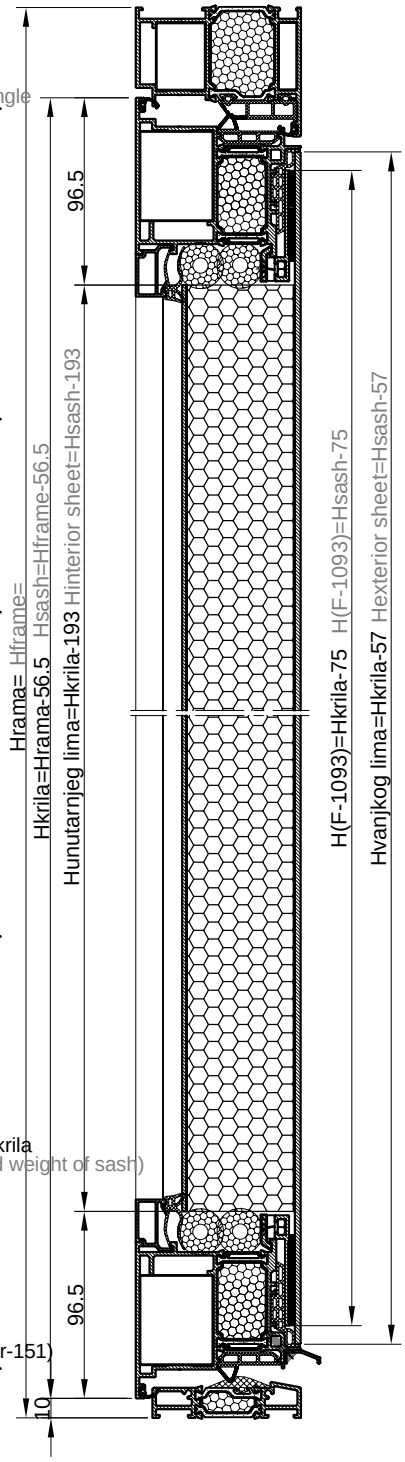
naziv name		mjera dimension	kom. pcs.	pilanje sawing angle
Ram FT-0551F	Frame FT-0551F	L	1	45-45
Ram FT-0551F	Frame FT-0551F	H	2	45-90
Krilo FT-0591F	Sash FT-0591F	(L/2)-49	4	45-45
Krilo FT-0591F	Sash FT-0591F	H-56.5	4	45-45
Prag FT-0584F	Threshold FT-0584F	L-164	1	90-90
Okapnica F-0970	Drip cap profile F-0970	Lkr-58	2	90-90
Staklo lajsna Z40-665	Glazing bead Z40-665	Lkr-141	4	90-90
Staklo lajsna Z40-665	Glazing bead Z40-665	Hkr-185	4	90-90
Profil kombatute FT-0571F	Flying mullion FT-0571F	Hkr-57	1	90-90
Al profil F-1093	Al profile F-1093	Lkr-76	4	45-45
Al profil F-1093	Al profile F-1093	Hkr-76	4	45-45
Kutna spojnica 710.143	Corner bracket 710.143		2	
Kutna spojnica 710.141	Corner bracket 710.141		2	
Kutna spojnica 710.136	Corner bracket 710.136		8	
Kutna spojnica 710.015	Corner bracket 710.015		8	
Kutna spojnica 710.203	Corner bracket 710.203		8	
Kutna spojnica 730.001	Corner bracket 730.001		10	
Kopča 141.001	Panel clamp 141.001		(4Lkr+4Hkr)/250	
Centralna brtva rama 338.004	Central gasket-frame 338.004	1L+3H		
Centralna brtva krila 338.006	Central gasket-sash 338.006	4Lkr+3Hkr		
Brtva na spoju rama i krila 317.002	Rebate gasket 317.002	1L+2H+4Lkr+4Hkr		
Brtva 348.004	Gasket 348.004	4(Lkr-53)+4(Hkr-53)		
Brtva prema panelu unut. 311.005	Panel gasket-internal 311.005	4Lkr+4Hkr		
Brtva praga 331.012	Threshold gasket 331.012	L-164	1	90-90
Čep okapnice F-0970 375.001	End cap for F-0970 375.001		2 para	
Umetak na pragu 363.103	End cap for threshold 363.103		1 par	
Čep kombatute 363.014	End cap for flying mullion 363.014		1 par	
Brava G-U Secury s MR2 (35) tri ključanja 122.016	Multipoint lock - G-U Secury MR2 (35) -122.016		1	
Brava G-U za pom. krilo (lijeva) 122.025	Lever-operated gear for passive leaf G-U (left) 122.025		1	
Gornji element za nastavljanje 122.026	Top shoot bolt unit 122.026		1	
Donji element za nastavljanje 122.027	Bottom shoot bolt unit 122.027		1	
Prihvatna pločica gore 122.065	Top striking plate 122.065		1	
Prihvatna pločica dolje 122.080	Bottom striking plate 122.080		1	
Trodijelna cilindrična šarka 112.011.01 - bijela	Barrel door hinge-3 part 112.011.01 - white	2 ili (3) po krilu ovisno o visini i tež.krila 2 or (3) per sash(dep. of height and weight of sash)		
Ručka za vrata 102.028	Door handle 102.028		2	
Četvrtka 102.025	Square spindle 102.025		1	
Cilindar (35-75) 122.095	Cylinder (35-75) 122.095		1	
Štitnik cilindra 122.098	Cylinder rosette 122.098		2	
Protuprovalni umetak 141.002	Security pin 141.002		4	
Izolacijski umetak Ø25 340.035	Underpanel insulator Ø25 340.035		8(Lkr-173)+8(Hkr-131)	
Vanjski lim panela 3 mm	Exterior sheet 3 mm	(Lkr.-57)x(Hkr.-57)	2	
Unutarnji lim panela 2 mm	Interior sheet 2 mm	(Lkr.-173)x(Hkr.-173)	2	
Stirodur za panel (60 mm)	Stirodur for panel (60 mm)	(Lkr.-173)x(Hkr.-173)	2	

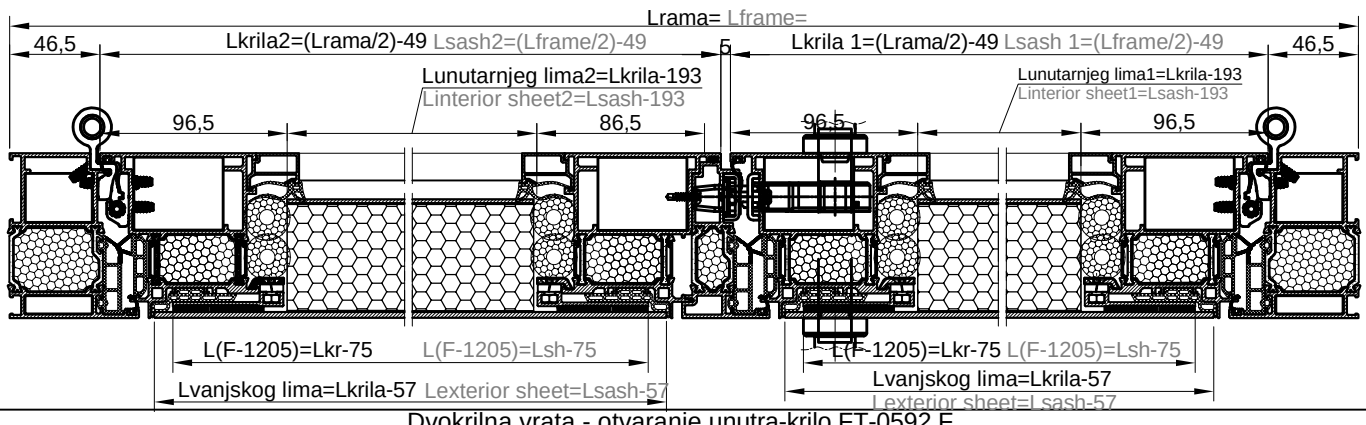


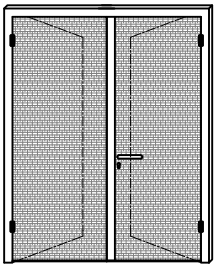




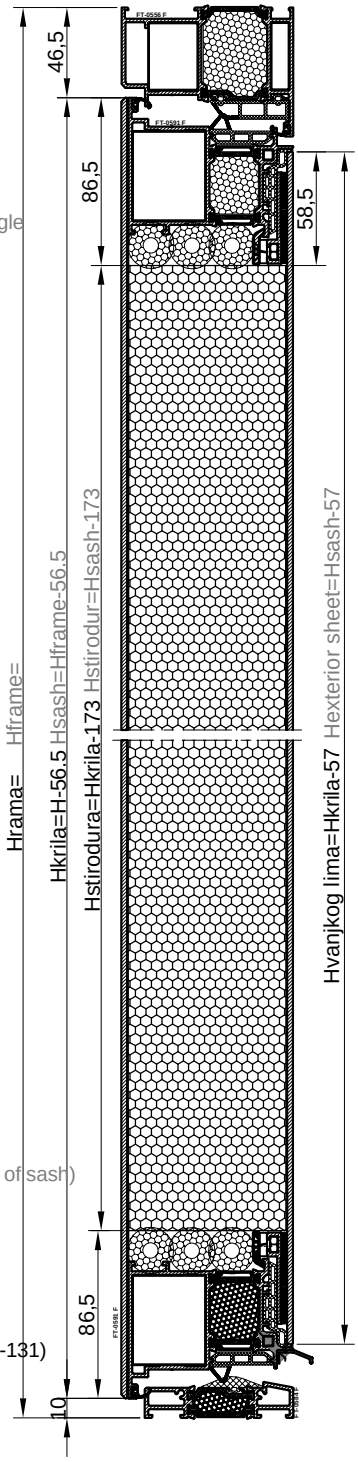
naziv name		mjera dimension	kom. pcs.	pilanje sawing angle
Ram FT-0551F	Frame FT-0551F	L	1	45-45
Ram FT-0551F	Frame FT-0551F	H	2	45-90
Krilo FT-0592F	Sash FT-0592F	(L/2)-49	4	45-45
Krilo FT-0592F	Sash FT-0592F	H-56.5	4	45-45
Prag FT-0584F	Threshold FT-0584F	L-164	1	90-90
Okapnica F-0970	Drip cap profile F-0970	Lkr-58	2	90-90
Staklo lajsna Z40-665	Glazing bead Z40-665	Lkr-161	4	90-90
Staklo lajsna Z40-665	Glazing bead Z40-665	Hkr-205	4	90-90
Profil kombatute FT-0571F	Flying mullion FT-0571F	Hkr-57	1	90-90
Al profil F-1205	Al profile F-1205	Lkr-76	4	45-45
Al profil F-1205	Al profile F-1205	Hkr-76	4	45-45
Kutna spojnica 710.143	Corner bracket 710.143		2	
Kutna spojnica 710.141	Corner bracket 710.141		2	
Kutna spojnica 710.136	Corner bracket 710.136		8	
Kutna spojnica 710.015	Corner bracket 710.015		8	
Kutna spojnica 710.203	Corner bracket 710.203		8	
Kutna spojnica 730.001	Corner bracket 730.001		10	
Kopča 141.001	Panel clamp 141.001		(4Lkr+4Hkr)/250	
Centralna brtva rama 338.004	Central gasket-frame 338.004	1L+3H		
Centralna brtva krila 338.006	Central gasket-sash 338.006	4Lkr+3Hkr		
Brtva na spoju rama i krila 317.002	Rebate gasket 317.002	1L+2H+4Lkr+4Hkr		
Brtva 348.004	Gasket 348.004	4(Lkr-53)+4(Hkr-53)		
Brtva prema panelu unut. 311.005	Panel gasket-internal 311.005	4Lkr+4Hkr		
Brtva praga 331.012	Threshold gasket 331.012	L-164	1	
Čep okapnice F-0970 375.001	End cap for F-0970 375.001		2 para	
Umetak na pragu 363.103	End cap for threshold 363.103		1 par	
Čep kombatute 363.014	End cap for flying mullion 363.014		1 par	
Brava G-U Secury s MR2 (45) tri ključanja 122.015	Multipoint lock - G-U Secury MR2 (45) -122.015		1	
Brava G-U za pom. krilo (lijeva) 122.025	Lever-operated gear for passive leaf G-U (left) 122.025		1	
Gornji element za nastavljanje 122.026	Top shoot bolt unit 122.026		1	
Donji element za nastavljanje 122.027	Bottom shoot bolt unit 122.027		1	
Prihvatna pločica gore 122.065	Top striking plate 122.065		1	
Prihvatna pločica dolje 122.080	Bottom striking plate 122.080		1	
Trodijelna cilindrična šarka 112.011.01 - bijela	Barrel door hinge-3 part 112.011.01 - white	2 ili (3) po krilu ovisno o visini i tež.krila 2 or (3) per sash(dep. of height and weight of sash)		
Ručka za vrata 102.028	Door handle 102.028		2	
Četvrtka 102.025	Square spindle 102.025		1	
Cilindar (35-75) 122.095	Cylinder (35-75) 122.095		1	
Štitnik cilindra 122.098	Cylinder rosette 122.098		2	
Protuprovalni umetak 141.002	Security pin 141.002		4	
Izolacijski umetak Ø25 340.035	Underpanel insulator Ø25 340.035		8(Lkr-192)+8(Hkr-151)	
Vanjski lim panela 3 mm	Exterior sheet 3 mm	(Lkr.-57)x(Hkr.-57)	2	
Unutarnji lim panela 2 mm	Interior sheet 2 mm	(Lkr.-193)x(Hkr.-193)	2	
Stirodur za panel (60 mm)	Stirodur for panel (60 mm)	(Lkr.-193)x(Hkr.-193)	2	

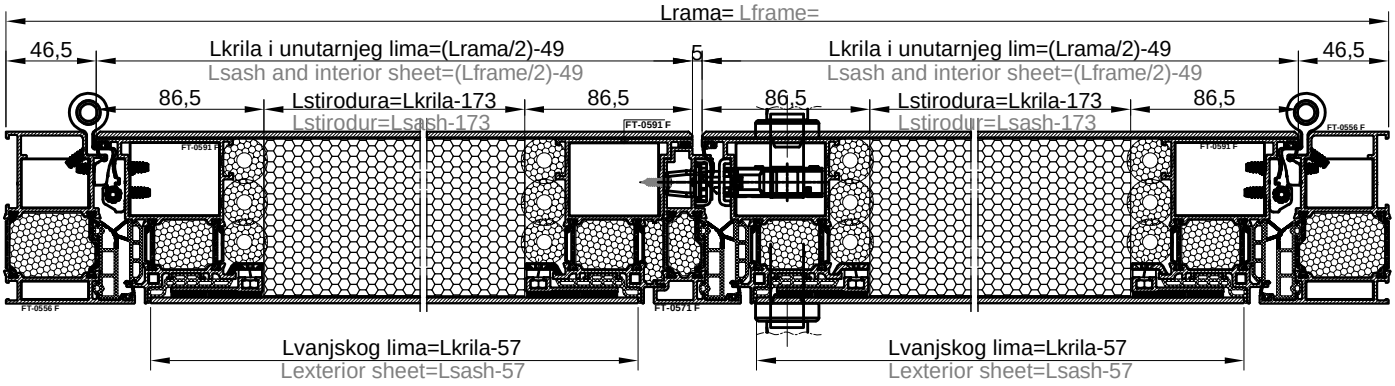


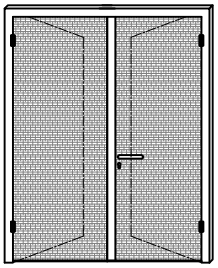




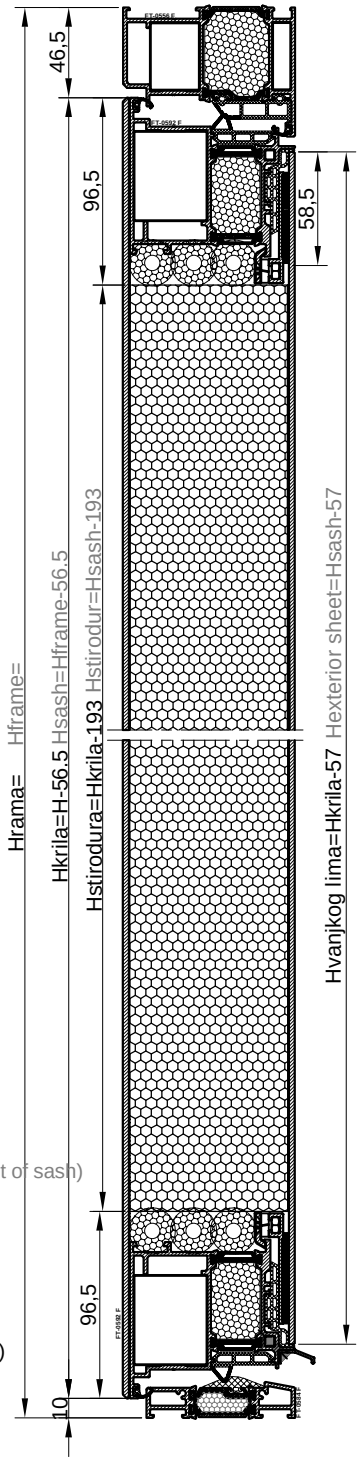
naziv name		mjera dimension	kom. pcs.	pilanje sawing angle
Ram FT-0556F	Frame FT-0556F	L	1	45-45
Ram FT-0556F	Frame FT-0556F	H	2	45-90
Krilo FT-0591F	Sash FT-0591F	(L/2)-49	4	45-45
Krilo FT-0591F	Sash FT-0591F	H-56.5	4	45-45
Profil kombatute FT-0571F	Flying mullion FT-0571F	Hkr-57	1	90-90
Prag FT-0584F	Threshold FT-0584F	L-164	1	90-90
Okapnica F-0970	Drip cap profile F-0970	Lkr-58	2	90-90
Al profil F-1093	Al profile F-1093	Lkr-76	4	45-45
Al profil F-1093	Al profile F-1093	Hkr-76	4	45-45
Kutna spojnica 710.143	Corner bracket 710.143		2	
Kutna spojnica 710.141	Corner bracket 710.141		2	
Kutna spojnica 710.136	Corner bracket 710.136		8	
Kutna spojnica 710.015	Corner bracket 710.015		8	
Kutna spojnica 710.203	Corner bracket 710.203		8	
Kutna spojnica 730.001	Corner bracket 730.001		10	
Kopča 141.001	Panel clamp 141.001		(4Lkr+4Hkr)/250	
Centralna brtva rama 338.004	Central gasket-frame 338.004	2Lkr+3Hkr		
Centralna brtva krila 338.006	Central gasket-sash 338.006	4Lkr+3Hkr		
Brtva na spoju rama i krila 317.002	Rebate gasket 317.002	6Lkr+6Hkr		
Brtva 348.004	Gasket 348.004	4(Lkr-53)+4(Hkr-53)		
Brtva praga 331.012	Threshold gasket 331.012	L-164	1	90-90
Čep okapnice F-0970 375.001	End cap for F-0970 375.001		2 par	
Umetak na pragu 363.103	End cap for threshold 363.103		1 par	
Brava G-U Secury s MR2 (35) tri ključanja 122.016	Multipoint lock - G-U Secury MR2 (35) -122.016		1	
Brava G-U za pom. krilo (lijeva) 122.025	Lever-operated gear for passive leaf G-U (left) 122.025		1	
Gornji element za nastavljanje 122.026	Top shoot bolt unit 122.026		1	
Donji element za nastavljanje 122.027	Bottom shoot bolt unit 122.027		1	
Prihvatna pločica gore 122.065	Top striking plate 122.065		1	
Prihvatna pločica dolje 122.080	Bottom striking plate 122.080		1	
Trodijelna cilindrična šarka 112.011.01 - bijela	Barrel door hinge-3 part 112.011.01 - white	2 ili (3) po krilu ovisno o visini i tež.krila 2 or (3) per sash(dep. of height and weight of sash)		
Ručka za vrata 102.028	Door handle 102.028		2	
Četvrtka 102.025	Square spindle 102.025		1	
Cilindar (35-75) 122.095	Cylinder (35-75) 122.095		1	
Štitnik cilindra 122.098	Cylinder rosette 122.098		2	
Protuprovalni umetak 141.002	Security pin 141.002		4	
Izolacijski umetak Ø25 340.035	Underpanel insulator Ø25 340.035		12(Lkr-173)+12(Hkr-131)	
Vanjski lim panela 3 mm	Exterior sheet 3 mm	(Lkr.-57)x(Hkr.-57)	2	
Unutarnji lim panela 3 mm	Interior sheet 3 mm	LkrxHkr	2	
Stirodur (ispuna panela 81.4 mm)	Stirodu (panel 81.4 mm)	(Lkrila-173)x(Hkrila-173) (Lkrila-173)x(Hkrila-173)	2	

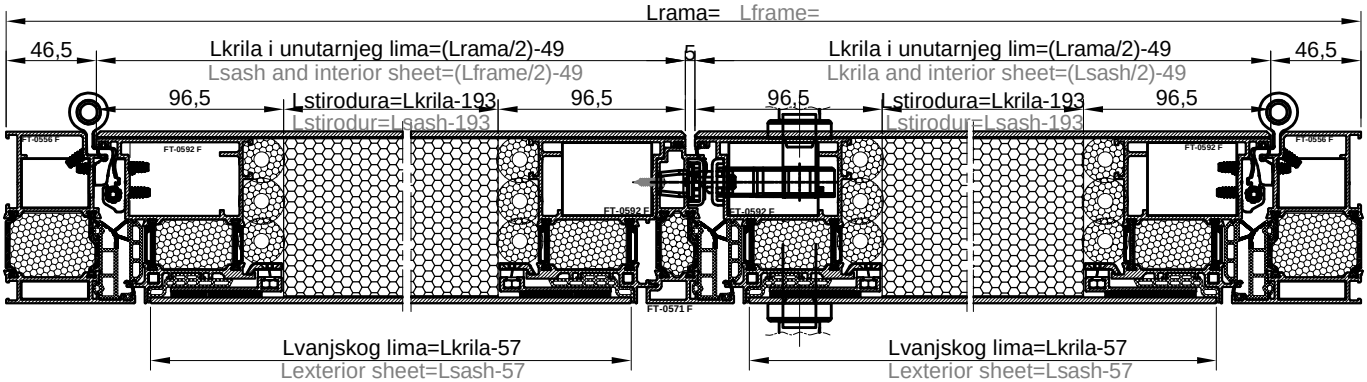


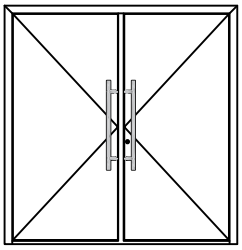




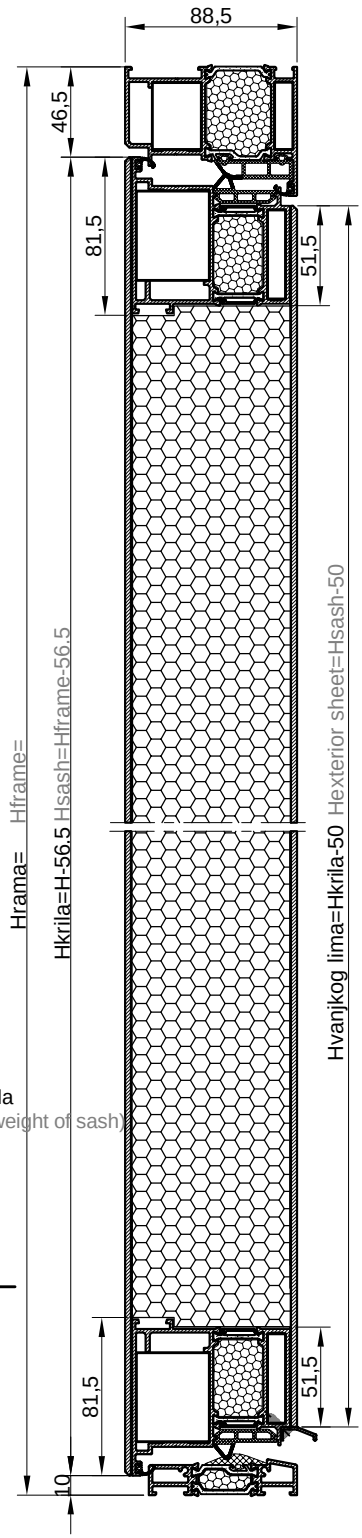
naziv name		mjera dimension	kom. pcs.	pilanje sawing angle
Ram FT-0556F	Frame FT-0556F	L	1	45-45
Ram FT-0556F	Frame FT-0556F	H	2	45-90
Krilo FT-0592F	Sash FT-0592F	(L/2)-49	4	45-45
Krilo FT-0592F	Sash FT-0592F	H-56.5	4	45-45
Profil kombatute FT-0571F	Flying mullion FT-0571F	Hkr-57	1	90-90
Prag FT-0584F	Threshold FT-0584F	L-164	1	90-90
Okapnica F-0970	Drip cap profile F-0970	Lkr-58	2	90-90
Al profil F-1205	Al profile F-1205	Lkr-76	4	45-45
Al profil F-1205	Al profile F-1205	Hkr-76	4	45-45
Kutna spojnica 710.143	Corner bracket 710.143		2	
Kutna spojnica 710.141	Corner bracket 710.141		2	
Kutna spojnica 710.136	Corner bracket 710.136		8	
Kutna spojnica 710.015	Corner bracket 710.015		8	
Kutna spojnica 710.203	Corner bracket 710.203		8	
Kutna spojnica 730.001	Corner bracket 730.001		10	
Kopča 141.001	Panel clamp 141.001		(4Lkr+4Hkr)/250	
Centralna brtva rama 338.004	Central gasket-frame 338.004	2Lkr+3Hkr		
Centralna brtva krila 338.006	Central gasket-sash 338.006	4Lkr+3Hkr		
Brtva na spoju rama i krila 317.002	Rebate gasket 317.002	6Lkr+6Hkr		
Brtva 348.004	Gasket 348.004	4(Lkr-53)+4(Hkr-53)		
Brtva praga 331.012	Threshold gasket 331.012	L-164	1	90-90
Čep okapnice F-0970 375.001	End cap for F-0970 375.001		1 par	
Umetak na pragu 363.103	End cap for threshold 363.103		1 par	
Brava G-U Secury s MR2 (45) tri ključanja 122.015	Multipoint lock - G-U Secury MR2 (45) -122.015		1	
Brava G-U za pom. krilo (lijeva) 122.025	Lever-operated gear for passive leaf G-U (left) 122.025		1	
Gornji element za nastavljanje 122.026	Top shoot bolt unit 122.026		1	
Donji element za nastavljanje 122.027	Bottom shoot bolt unit 122.027		1	
Prihvatna pločica gore 122.065	Top striking plate 122.065		1	
Prihvatna pločica dolje 122.080	Bottom striking plate 122.080		1	
Trodijelna cilindrična šarka 112.011.01 - bijela	Barrel door hinge-3 part 112.011.01 - white	2 ili (3) po krilu ovisno o visini i tež.krila 2 or (3) per sash(dep. of height and weight of sash)		
Ručka za vrata 102.028	Door handle 102.028		2	
Četvrtka 102.025	Square spindle 102.025		1	
Cilindar (35-75) 122.095	Cylinder (35-75) 122.095		1	
Štitnik cilindra 122.098	Cylinder rosette 122.098		2	
Protuprovalni umetak 141.002	Security pin 141.002		4	
Izolacijski umetak Ø25 340.035	Underpanel insulator Ø25 340.035		12(Lkr-193)+12(Hkr-151)	
Vanjski lim panela 3 mm	Exterior sheet 3 mm	(Lkr.-57)x(Hkr.-57)	2	
Unutarnji lim panela 3 mm	Interior sheet 3 mm	LkrxHkr	2	
Stirodur (ispuna panela 81.4 mm)	Stirodur (panel 81.4 mm)	(Lkrila-193)x(Hkrila-193) (Lsash-193)x(Hsash193)	2	

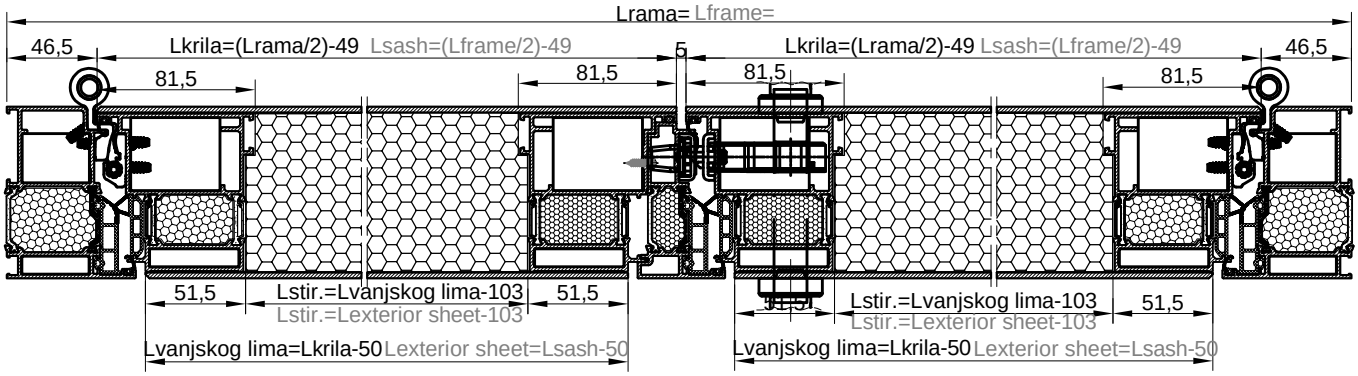


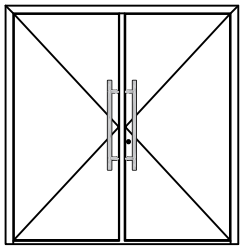




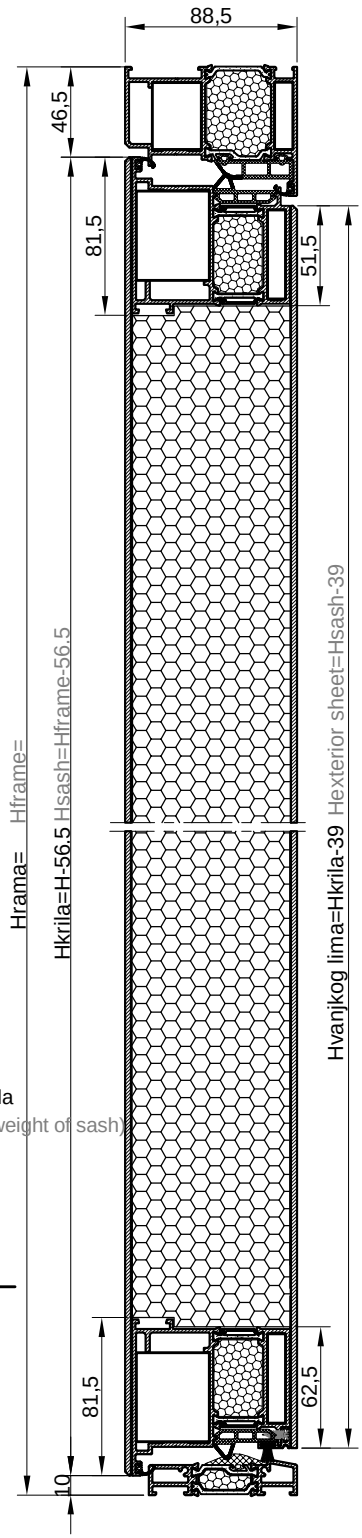
naziv name		mjera dimension	kom. pcs.	pilanje sawing angle
Ram FT-0556F	Frame FT-0556F	L	1	45-45
Ram FT-0556F	Frame FT-0556F	H	2	45-90
Krilo FT-0593F	Sash FT-0593F	(L/2)-49	4	45-45
Krilo FT-0593F	Sash FT-0593F	H-56.5	4	45-45
Prag FT-0584F	Threshold FT-0584F	L-164	1	90-90
Profil kombatute FT-0571F	Flying mullion FT-0571F	Hkr-57	1	90-90
Okapnica F-0970	Drip cap profile F-0970	Lkr-58	2	90-90
Kutna spojnica 710.143	Corner bracket 710.143		2	
Kutna spojnica 710.141	Corner bracket 710.141		2	
Kutna spojnica 710.136	Corner bracket 710.136		8	
Kutna spojnica 710.169	Corner bracket 710.169		8	
Kutna spojnica 730.001	Corner bracket 730.001		10	
Centralna brtva rama 338.004	Central gasket-frame 338.004	1L+3H		
Centralna brtva krila 338.006	Central gasket-sash 338.006	4Lkr+3Hkr		
Brtva na spoju rama i krila 317.002	Rebate gasket 317.002	1L+2H+4Lkr+4Hkr		
Brtva praga 331.012	Threshold gasket 331.012	L-164	2	90-90
Čep okapnice F-0970 375.001	End cap for F-0970 375.001		2 par	
Umetak na pragu 363.103	End cap for threshold 363.103		1 par	
Čep kombatute 363.014	End cap for flying mullion 363.014		1 par	
Brava G-U Secury s MR2 (45) tri ključanja 122.015	Multipoint lock - G-U Secury MR2 (45) -122.015		1	
Brava G-U za pom. krilo (lijeva) 122.025	Lever-operated gear for passive leaf G-U (left) 122.025		1	
Gornji element za nastavljanje 122.026	Top shoot bolt unit 122.026		1	
Donji element za nastavljanje 122.027	Bottom shoot bolt unit 122.027		1	
Prihvatna pločica gore 122.065	Top striking plate 122.065		1	
Prihvatna pločica dolje 122.080	Bottom striking plate 122.080		1	
Trodijelna cilindrična šarka 112.011.01 - bijela	Barrel door hinge-3 part 112.011.01 - white	2 ili (3) po krilu ovisno o visini i tež.krila 2 or (3) per sash(dep. of height and weight of sash)		
Ručka za vrata 102.028	Door handle 102.028		2	
Četvrtka 102.025	Square spindle 102.025		1	
Cilindar (35-75) 122.095	Cylinder (35-75) 122.095		1	
Štitnik cilindra 122.098	Cylinder rosette 122.098		2	
Protuprovalni umetak 141.002	Security pin 141.002		4	
Vanjski lim panela 3 mm	Exterior sheet 3 mm	(Lkr.-50)x(Hkr.-50)	2	
Unutarnji lim panela 3 mm	Interior sheet 3 mm	LkrxHkr	2	
Stirodur (ispuna panela 81.4 mm)	Stirodur (panel 81.4 mm)	(Lvanj.lima-103)x(Hvanj.lima-103) (Lext.sheet-103)x(Hext.sheet-103)	2	

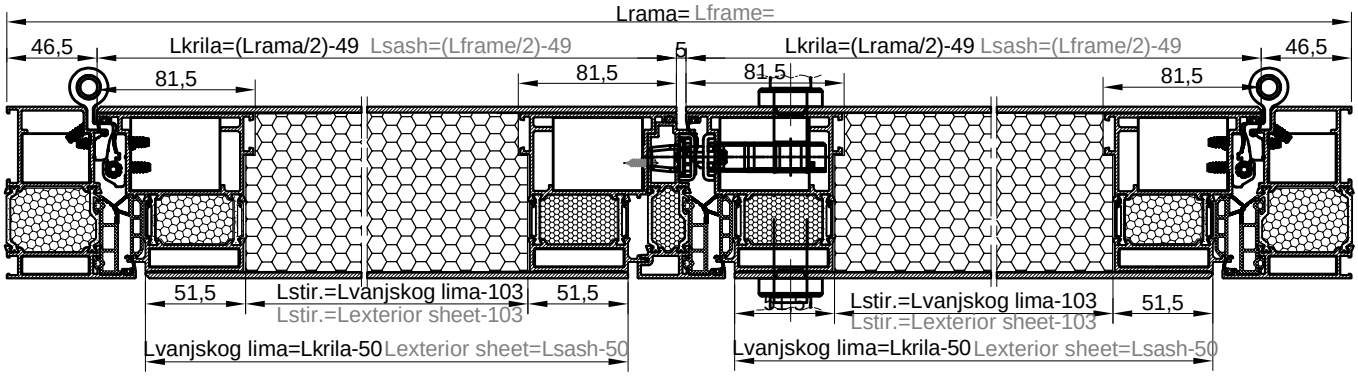


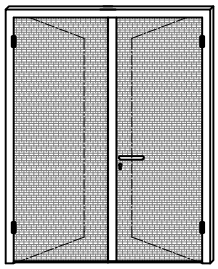




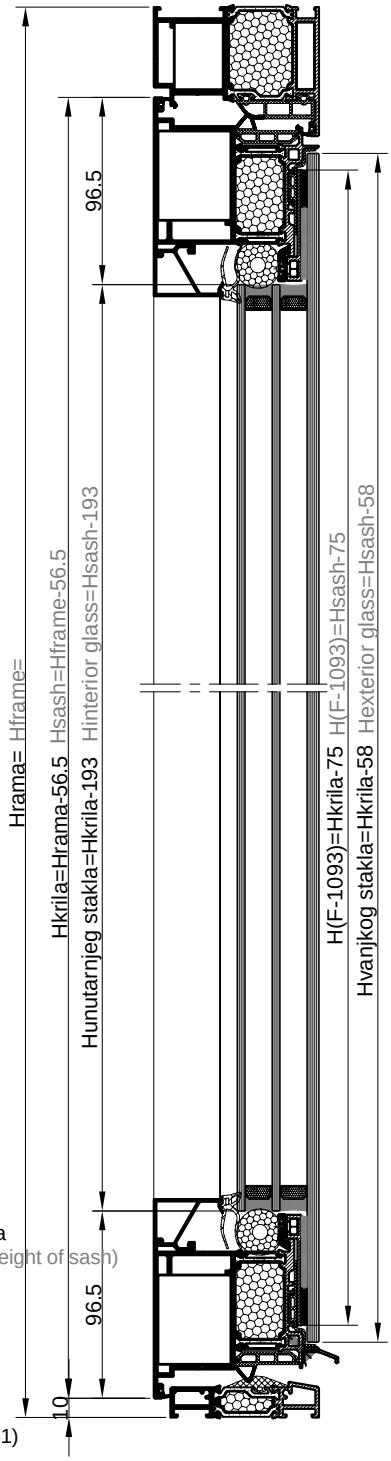
naziv name		mjera dimension	kom. pcs.	pilanje sawing angle
Ram FT-0556F	Frame FT-0556F	L	1	45-45
Ram FT-0556F	Frame FT-0556F	H	2	45-90
Krilo FT-0593F	Sash FT-0593F	(L/2)-49	4	45-45
Krilo FT-0593F	Sash FT-0593F	H-56.5	4	45-45
Prag FT-0584F	Threshold FT-0584F	L-164	1	90-90
Profil kombatute FT-0571F	Flying mullion FT-0571F	Hkr-57	1	90-90
Okapnica F-1596	Drip cap profile F-1596	Lkr-54	2	90-90
Kutna spojnica 710.143	Corner bracket 710.143		2	
Kutna spojnica 710.141	Corner bracket 710.141		2	
Kutna spojnica 710.136	Corner bracket 710.136		8	
Kutna spojnica 710.169	Corner bracket 710.169		8	
Kutna spojnica 730.001	Corner bracket 730.001		10	
Centralna brtva rama 338.004	Central gasket-frame 338.004	1L+3H		
Centralna brtva krila 338.006	Central gasket-sash 338.006	4Lkr+3Hkr		
Brtva na spoju rama i krila 317.002	Rebate gasket 317.002	1L+2H+4Lkr+4Hkr		
Brtva praga 331.012	Threshold gasket 331.012	L-164	2	90-90
Četkica 7x9 347.003	Brush seal 7x9 347.003	Lkr-35	2	90-90
Čep okapnice F-1596 373.057	End cap for F-1596 373.057		2 par	
Umetak na pragu 363.103	End cap for threshold 363.103		1 par	
Čep kombatute 363.014	End cap for flying mullion 363.014		1 par	
Brava G-U Secury s MR2 (45) tri ključanja 122.015	Multipoint lock - G-U Secury MR2 (45) -122.015		1	
Brava G-U za pom. krilo (lijeva) 122.025	Lever-operated gear for passive leaf G-U (left) 122.025		1	
Gornji element za nastavljanje 122.026	Top shoot bolt unit 122.026		1	
Donji element za nastavljanje 122.027	Bottom shoot bolt unit 122.027		1	
Prihvatna pločica gore 122.065	Top striking plate 122.065		1	
Prihvatna pločica dolje 122.080	Bottom striking plate 122.080		1	
Trodijelna cilindrična šarka 112.011.01 - bijela	Barrel door hinge-3 part 112.011.01 - white	2 ili (3) po krilu ovisno o visini i tež.krila 2 or (3) per sash(dep. of height and weight of sash)		
Ručka za vrata 102.028	Door handle 102.028		2	
Četvrtka 102.025	Square spindle 102.025		1	
Cilindar (35-75) 122.095	Cylinder (35-75) 122.095		1	
Štitnik cilindra 122.098	Cylinder rosette 122.098		2	
Protuprovalni umetak 141.002	Security pin 141.002		4	
Vanjski lim panela 3 mm	Exterior sheet 3 mm	(Lkr.-50)x(Hkr.-39)	2	
Unutarnji lim panela 3 mm	Interior sheet 3 mm	LkrxHkr	2	
Stirodur (ispuna panela 81.4 mm)	Stirodur (panel 81.4 mm)	(Lvanj.lima-103)x(Hvanj.lima-114) (Lext.sheet-103)x(Hint.sheet-114)	2	

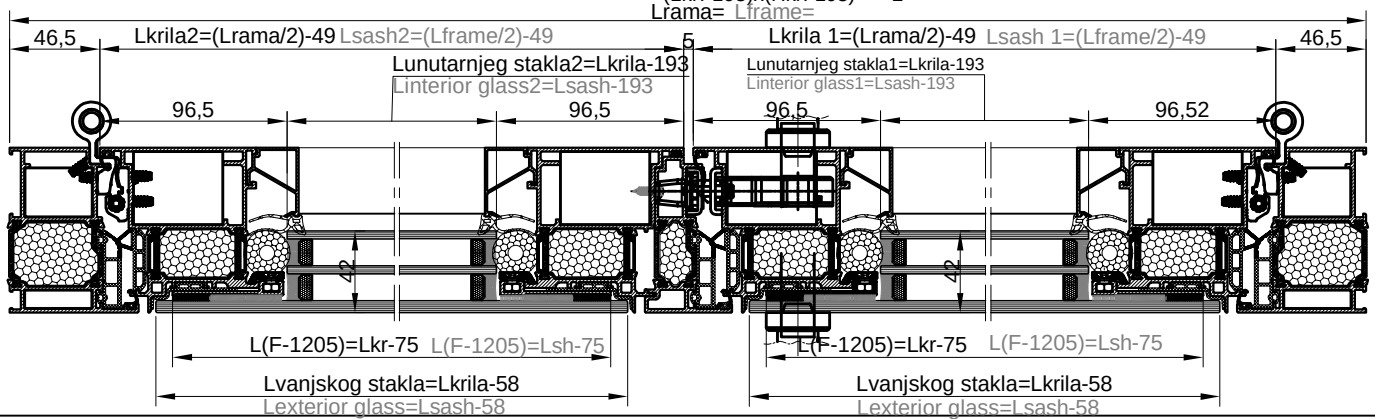






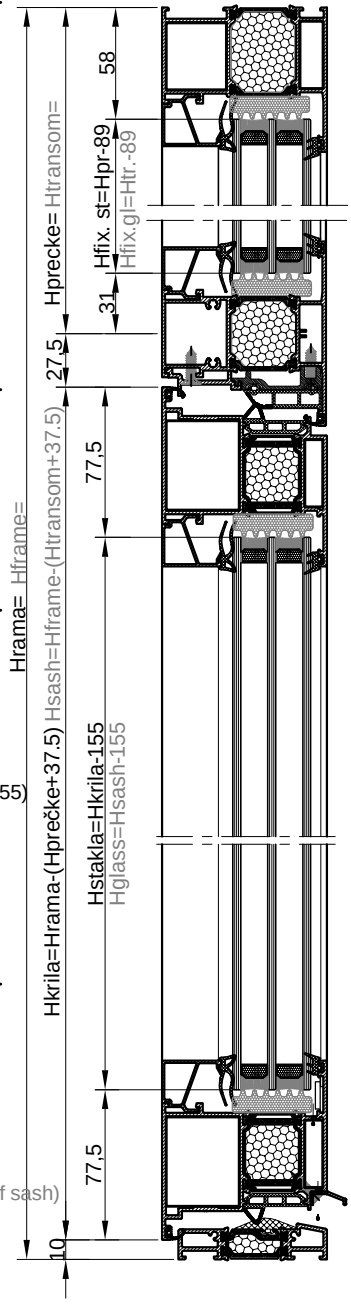
naziv name		mjera dimension	kom. pcs.	pilanje sawing angle
Ram FT-0551F	Frame FT-0551F	L	1	45-45
Ram FT-0551F	Frame FT-0551F	H	2	45-90
Krilo FT-0592F	Sash FT-0592F	(L/2)-49	4	45-45
Krilo FT-0592F	Sash FT-0592F	H-56.5	4	45-45
Prag FT-0584F	Threshold FT-0584F	L-164	1	90-90
Okapnica F-0970	Drip cap profile F-0970	Lkr-58	2	90-90
Staklo lajsna Z40-669	Glazing bead Z40-669	Lkr-161	4	90-90
Staklo lajsna Z40-669	Glazing bead Z40-669	Hkr-205	4	90-90
Profil kombatute FT-0571F	Flying mullion FT-0571F	Hkr-57	1	90-90
Al profil F-1205	Al profile F-1205	Lkr-75	4	45-45
Al profil F-1205	Al profile F-1205	Hkr-75	4	45-45
Kutna spojnica 710.143	Corner bracket 710.143		2	
Kutna spojnica 710.141	Corner bracket 710.141		2	
Kutna spojnica 710.136	Corner bracket 710.136		8	
Kutna spojnica 710.015	Corner bracket 710.015		8	
Kutna spojnica 710.203	Corner bracket 710.203		8	
Kutna spojnica 730.001	Corner bracket 730.001		10	
Kopča 141.001	Panel clamp 141.001		(4Lkr+4Hkr)/250	
Centralna brtva rama 338.004	Central gasket-frame 338.004	1L+3H		
Centralna brtva krila 338.006	Central gasket-sash 338.006	4Lkr+3Hkr		
Brtva na spoju rama i krila 317.002	Rebate gasket 317.002	1L+2H+4Lkr+5Hkr		
Brtva 348.003	Gasket 348.003	4(Lkr-53)+4(Hkr-53)		
Brtva prema staklu unutarnja 311.005	Glazing gasket -internal- 311.005	4Lkr+4Hkr		
Brtva praga 331.012	Threshold gasket 331.012	L-164	1	90-90
Čep okapnice F-0970 375.001	End cap for F-0970 375.001		2 para	
Umetak na pragu 363.103	End cap for threshold 363.103		1 par	
Čep kombatute 363.014	End cap for flying mullion 363.014		1 par	
Brava G-U Secury s MR2 (45) tri ključanja 122.015	Multipoint lock - G-U Secury MR2 (45) -122.015		1	
Brava G-U za pom. krilo (lijeva) 122.025	Lever-operated gear for passive leaf G-U (left) 122.025		1	
Gornji element za nastavljanje 122.026	Top shoot bolt unit 122.026		1	
Donji element za nastavljanje 122.027	Bottom shoot bolt unit 122.027		1	
Prihvatna pločica gore 122.065	Top striking plate 122.065		1	
Prihvatna pločica dolje 122.080	Bottom striking plate 122.080		1	
Trodijelna cilindrična šarka 112.011.01 - bijela	Barrel door hinge-3 part 112.011.01 - white	2 ili (3) po krilu ovisno o visini i tež.krila 2 or (3) per sash(dep. of height and weight of sash)		
Ručka za vrata 102.028	Door handle 102.028		2	
Četvrtka 102.025	Square spindle 102.025		1	
Cilindar (35-75) 122.095	Cylinder (35-75) 122.095		1	
Štitnik cilindra 122.098	Cylinder rosette 122.098		2	
Protuprovalni umetak 141.002	Security pin 141.002		4	
Izolacijski umetak Ø25 340.035	Underglass insulator Ø25 340.035		4(Lkr-192)+4(Hkr-151)	
Vanjsko staklo	Exterior glass	(Lkr.-58)x(Hkr.-58)	2	
Unutarnje staklo	Interior glass	(Lkr.-193)x(Hkr.-193)	2	

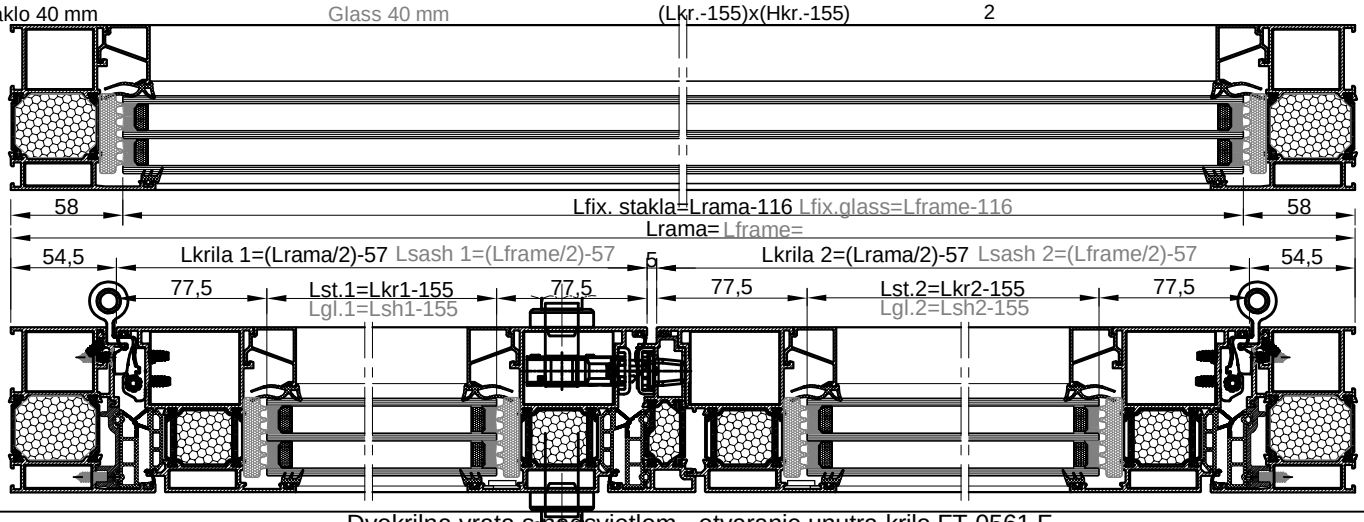




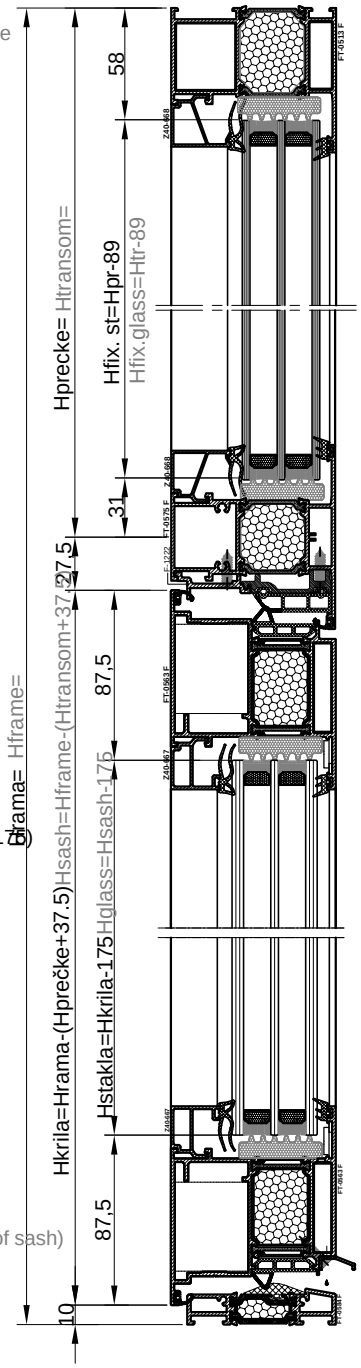
Dvokrilna vrata s nadsvjetlom
Double-leaf door with top light

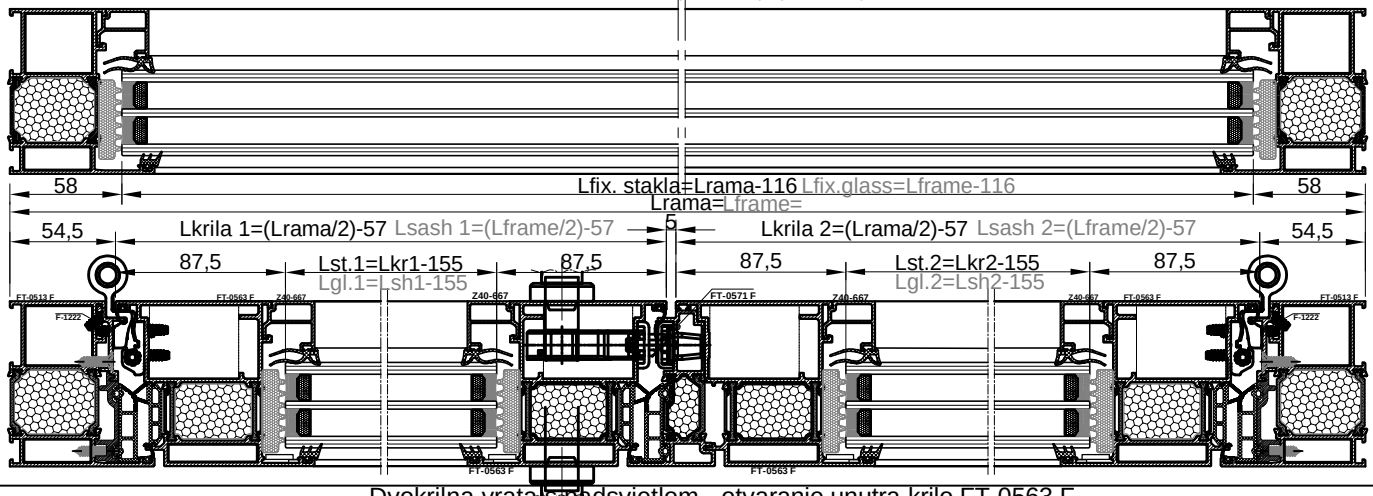
naziv name		mjera dimension	kom. pcs.	pilanje sawing angle
Ram FT-0513F	Frame FT-0513F	L	1	45-45
Ram FT-0513F	Frame FT-0513F	H	2	45-90
Krilo FT-0561F	Sash FT-0561F	(L/2)-57	4	45-45
Krilo FT-0561F	Sash FT-0561F	H-(Hpr+37.5)	4	45-45
Prag FT-0584F	Threshold FT-0584F	L-180	1	90-90
Okapnica F-0970	Drip cap profile F-0970	Lkr-58	2	90-90
Staklo lajsna Z40-668	Glazing bead Z40-668	L-99	2	90-90
Staklo lajsna Z40-668	Glazing bead Z40-668	Lkr-141	4	90-90
Staklo lajsna Z40-668	Glazing bead Z40-668	Hpr.-116	2	90-90
Staklo lajsna Z40-668	Glazing bead Z40-668	H-(Hpr.+222.5)	4	90-90
Prečka FT-0575F	Transom FT-0575F	L-87.5	1	90-90
Umetak rama F-1222	Additional profile F-1222	L-89.1	1	45-45
Umetak rama F-1222	Additional profile F-1222	H-(Hpr+17.7)	2	45-90
Profil kombatute FT-0571F	Flying mullion FT-0571F	Hkr-57	1	90-90
Kutna spojnica 710.145	Corner bracket 710.145		2	
Kutna spojnica 710.141	Corner bracket 710.141		8	
Kutna spojnica 710.136	Corner bracket 710.136		8	
Kutna spojnica 731.010	Corner bracket 731.010		8	
Kutna spojnica 710.091	Corner bracket 710.091		2	
Veznik prečke 710.066	T bracket 710.066		4	
Veznik prečke 710.079	T bracket 710.079		4	
Kutna spojnica 730.001	Corner bracket 730.001		18	
Centralna brtva rama 338.004	Central gasket-frame 338.004	1L+3H		
Centralna brtva krila 338.006	Central gasket-sash 338.006	4Lkr+3Hkr		
Brtva 317.002	Rebate gasket 317.002	1L+4Lkr+6Hkr		
Brtva prema staklu vanjska 328.003	Glazing gasket -external- 328.003	2L+2Hpr+4Lkr+4Hkr		
Brtva prema staklu unutarnja 311.004	Glazing gasket -internal- 311.004	2L+2Hpr+4Lkr+4Hkr		
Brtva praga 331.012	Threshold gasket 331.012	L-180	1	90-90
Izolacijski umetak 340.013	Underglass insulator 340.013	2(L-91.5)+2(Hpr-89)+4(Lkr-131)+4(Hkr-155)		
Čep okapnice F-0970 375.001	End cap for F-0970 375.001		2 para	
Umetak na pragu 363.103	End cap for threshold 363.103		1 par	
Umetak na ramu 374.043	Additional pvc profile 374.043	L-88	1	45-45
Umetak na ramu 374.043	Additional pvc profile 374.043	H-(Hpr+17)	2	45-90
Čep kombatute 363.014	End cap for flying mullion 363.014		1 par	
Brava G-U Secury s MR2 (35) tri ključanja 122.016	Multipoint lock - G-U Secury MR2 (35) -122.016		1	
Brava G-U za pom. krilo (desna) 122.082	Lever-operated gear for passive leaf G-U (right) 122.082		1	
Gornji element za nastavljanje 122.026	Top shoot bolt unit 122.026		1	
Donji element za nastavljanje 122.027	Bottom shoot bolt unit 122.027		1	
Gornja prihvatna pločica 122.065	Top striking plate 122.065		1	
Donja prihvatna pločica 122.080	Bottom striking plate 122.080		1	
Trodijelna cilindrična šarka 112.011.01 - bijela	Barrel door hinge-3 part 112.011.01 - white	2 ili (3) po krilu ovisno o visini i tež.krila 2 or (3) per sash(dep. of height and weight of sash)		
Ručka za vrata 102.028	Door handle 102.028		2	
Četvrtka 102.025	Square spindle 102.025		1	
Cilindar (35-75) 122.095	Cylinder (35-75) 122.095		1	
Štitnik cilindra 122.098	Cylinder rosette 122.098		2	
Protuprovalni umetak 141.002	Security pin 141.002		4	
Staklo 40 mm	Glass 40 mm	(L-116)x(Hpr.-89)	1	
Staklo 40 mm	Glass 40 mm	(Lkr.-155)x(Hkr.-155)	2	

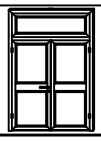




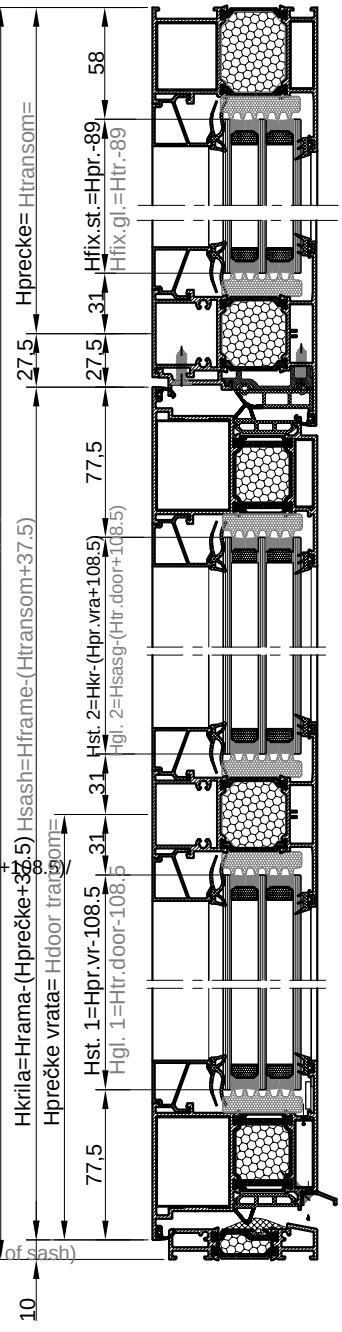
naziv name		mjera dimension	kom. pcs.	pilanje sawing angle
Ram FT-0513F	Frame FT-0513F	L	1	45-45
Ram FT-0513F	Frame FT-0513F	H	2	45-90
Krilo FT-0563F	Sash FT-0563F	(L/2)-57	4	45-45
Krilo FT-0563F	Sash FT-0563F	H-(Hpr+37.5)	4	45-45
Prag FT-0584F	Threshold FT-0584F	L-180	1	90-90
Okapnica F-0970	Drip cap profile F-0970	Lkr-58	2	90-90
Staklo lajsna Z40-667	Glazing bead Z40-667	L-99	2	90-90
Staklo lajsna Z40-667	Glazing bead Z40-667	Lkr-161	4	90-90
Staklo lajsna Z40-667	Glazing bead Z40-667	Hpr.-116	2	90-90
Staklo lajsna Z40-667	Glazing bead Z40-667	H-(Hpr.+242.5)	4	90-90
Prečka FT-0575F	Transom FT-0575F	L-87.5	1	90-90
Umetak rama F-1222	Additional profile F-1222	L-89	1	45-45
Umetak rama F-1222	Additional profile F-1222	H-(Hpr+17.7)	2	45-90
Profil kombatute FT-0571F	Flying mullion FT-0571F	Hkr-57	1	90-90
Kutna spojnica 710.145	Corner bracket 710.145		2	
Kutna spojnica 710.169	Corner bracket 710.141		8	
Kutna spojnica 710.136	Corner bracket 710.136		8	
Kutna spojnica 731.010	Corner bracket 731.010		8	
Kutna spojnica 710.091	Corner bracket 710.091		2	
Veznik prečke 710.066	T bracket 710.066		4	
Veznik prečke 710.079	T bracket 710.079		4	
Kutna spojnica 730.001	Corner bracket 730.001		18	
Centralna brtva rama 338.004	Central gasket-frame 338.004	1L+3H		
Centralna brtva krila 338.006	Central gasket-sash 338.006	4Lkr+3Hkr		
Brtva 317.002	Rebate gasket 317.002	1L+4Lkr+6Hkr		
Brtva prema staklu vanjska 328.003	Glazing gasket -external- 328.003	2L+2Hpr+4Lkr+4Hkr		
Brtva prema staklu unutarnja 311.004	Glazing gasket -internal- 311.004	2L+2Hpr+4Lkr+4Hkr		
Brtva praga 331.012	Threshold gasket 331.012	L-180	1	90-90
Izolacijski umetak 340.013	Underglass insulator 340.013	2(L-91.5)+2(Hpr-89)+4(Lkr-151)+4(Hkr-175)		
Čep okapnice F-0970 375.001	End cap for F-0970 375.001		2 para	
Umetak na pragu 363.103	End cap for threshold 363.103		1 par	
Umetak na ramu 374.043	Additional pvc profile 374.043	L-88	1	45-45
Umetak na ramu 374.043	Additional pvc profile 374.043	H-(Hpr+17)	2	45-90
Čep kombatute 363.014	End cap for flying mullion 363.014		1 par	
Brava G-U Secury s MR2 (45) tri ključanja 122.015	Multipoint lock - G-U Secury MR2 (45) -122.015		1	
Brava G-U za pom. krilo (desna) 122.082	Lever-operated gear for passive leaf G-U (right) 122.082		1	
Gornji element za nastavljanje 122.026	Top shoot bolt unit 122.026		1	
Donji element za nastavljanje 122.027	Bottom shoot bolt unit 122.027		1	
Gornja prihvatna pločica 122.065	Top striking plate 122.065		1	
Donja prihvatna pločica 122.080	Bottom striking plate 122.080		1	
Trodijelna cilindrična šarka 112.011.01 - bijela	Barrel door hinge-3 part 112.011.01 - white	2 ili (3) po krilu ovisno o visini i tež.krila 2 or (3) per sash(dep. of height and weight of sash)		
Ručka za vrata 102.028	Door handle 102.028		2	
Četvrtka 102.025	Square spindle 102.025		1	
Cilindar (35-75) 122.095	Cylinder (35-75) 122.095		1	
Štitnik cilindra 122.098	Cylinder rosettte 122.098		2	
Protuprovalni umetak 141.002	Security pin 141.002		4	
Staklo 44 mm	Glass 44 mm	(L-116)x(Hpr.-89)		1
Staklo 44 mm	Glass 44 mm	(Lkr.-175)x(Hkr.-175)		2

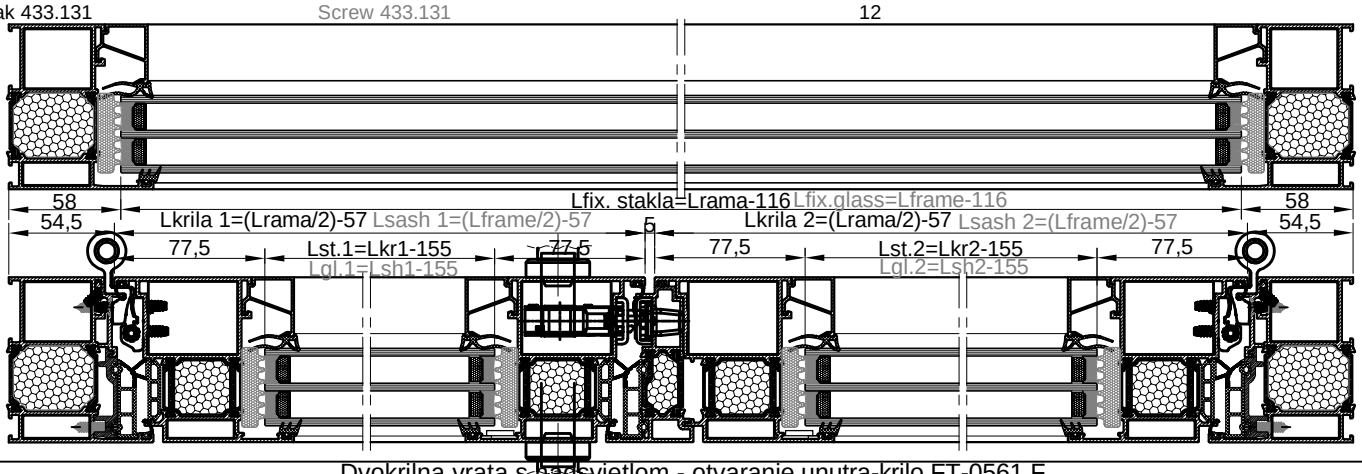




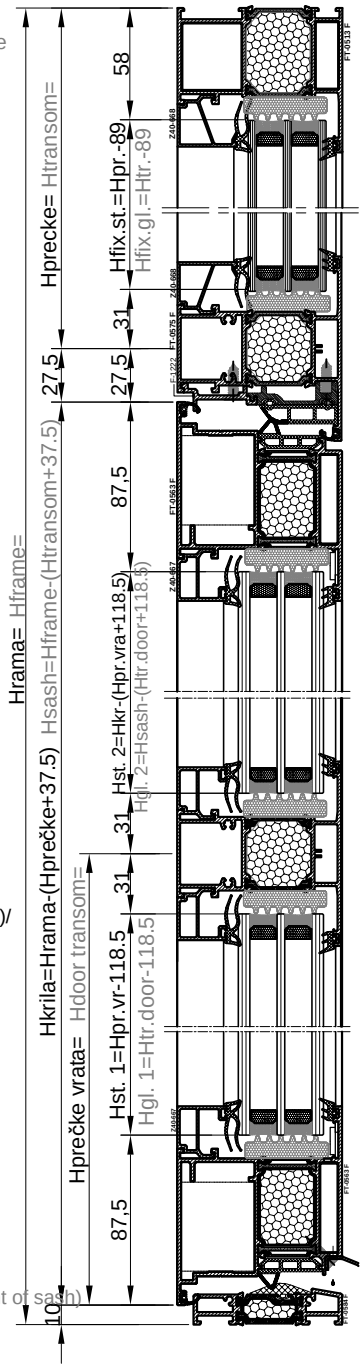


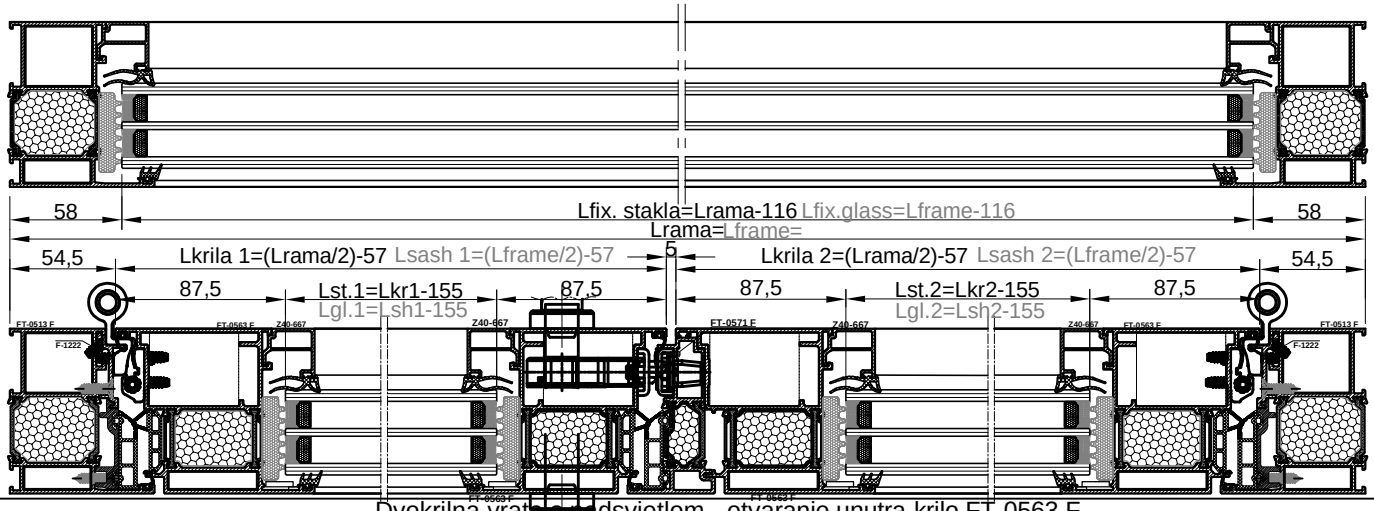
naziv name		mjera dimension	kom. pcs.	pilanje sawing angle
Ram FT-0513F	Frame FT-0513F	L	1	45-45
Ram FT-0513F	Frame FT-0513F	H	2	45-90
Krilo FT-0561F	Sash FT-0561F	(L/2)-57	4	45-45
Krilo FT-0561F	Sash FT-0561F	H-(Hpr+37.5)	4	45-45
Prag FT-0584F	Threshold FT-0584F	L-180	1	90-90
Okapnica F-0970	Drip cap profile F-0970	Lkr-58	2	90-90
Staklo lajsna Z40-668	Glazing bead Z40-668	L-99	2	90-90
Staklo lajsna Z40-668	Glazing bead Z40-668	Lkr-141	8	90-90
Staklo lajsna Z40-668	Glazing bead Z40-668	Hpr.-116	2	90-90
Staklo lajsna Z40-668	Glazing bead Z40-668	Hpr.vr.-137	4	90-90
Staklo lajsna Z40-668	Glazing bead Z40-668	H-(Hpr.+Hpr.vr.+174.5)	4	90-90
Prečka FT-0575F	Transom FT-0575F	L-87.5	1	90-90
Prečka na krilu FT-0575F	Transom-in sash FT-0575F	Lkr-128	2	90-90
Umetak rama F-1222	Additional profile F-1222	L-89	1	45-45
Umetak rama F-1222	Additional profile F-1222	H-(Hpr+17.7)	2	45-90
Profil kombatute FT-0571F	Flying mullion FT-0571F	Hkr-57	1	90-90
Kutna spojnica 710.145	Corner bracket 710.145		2	
Kutna spojnica 710.141	Corner bracket 710.141		8	
Kutna spojnica 710.136	Corner bracket 710.136		8	
Kutna spojnica 731.010	Corner bracket 731.010		8	
Kutna spojnica 710.091	Corner bracket 710.091		2	
Kutna spojnica 730.001	Corner bracket 730.001		18	
Veznik prečke 710.066	T bracket 710.066		12	
Veznik prečke 710.079	T bracket 710.079		4	
Veznik prečke 710.171	T bracket 710.171		8	
Centralna brtva rama 338.004	Central gasket-frame 338.004	1L+3Hkr		
Centralna brtva krila 338.006	Central gasket-sash 338.006	4Lkr+3Hkr		
Brtva na spoju rama i krila 317.002	Rebate gasket 317.002	1L+4Lkr+6Hkr		
Brtva prema staklu vanjska 328.003	Glazing gasket -external- 328.003	2L+8Lkr+2Hpr+4Hkr		
Brtva prema staklu unutarnja 311.004	Glazing gasket -internal- 311.004	2L+8Lkr+2Hpr+4Hkr		
Brtva praga 331.012	Threshold gasket 331.012	L-180	1	90-90
Izolacijski umetak 340.013	Underglass insulator 340.013	2(L-91.5)+2(Hpr.-89)		
Izolacijski umetak 340.013	Underglass insulator 340.013	8(Lkr.-131)+4(Hpr.vr.-108.5)+4/Hkr.-(Hpr.vr.+108.5)/		
Čep okapnice F-0970 375.001	End cap for F-0970 375.001		2 para	
Umetak na pragu 363.103	End cap for threshold 363.103		1 par	
Čep kombatute 363.014	End cap for flying mullion 363.014		1 par	
Umetak na ramu 374.043	Additional pvc profile 374.043	L-88	1	45-45
Umetak na ramu 374.043	Additional pvc profile 374.043	H-(Hpr+17)	2	45-90
Brava G-U Secury s MR2 (35) tri ključanja 122.016	Multipoint lock - G-U Secury MR2 (35) -122.016		1	
Brava G-U za pom. krilo (desna) 122.082	Lever-operated gear for passive leaf G-U (right) 122.082		1	
Gornji element za nastavljanje 122.026	Top shoot bolt unit 122.026		1	
Donji element za nastavljanje 122.027	Bottom shoot bolt unit 122.027		1	
Gornja prihvatna pločica 122.065	Top striking plate 122.065		1	
Donja prihvatna pločica 122.080	Bottom striking plate 122.080		1	
Trodijelna cilindrična šarka 112.011.01 - bijela	Barrel door hinge-3 part 112.011.01 - white	2 ili (3) po krilu ovisno o visini i tež.krila 2 or (3) per sash(dep. of height and weight of sash)		
Ručka za vrata 102.028	Door handle 102.028		2	
Četvrtka 102.025	Square spindle 102.025		1	
Cilindar (35-75) 122.095	Cylinder (35-75) 122.095		1	
Štitnik cilindra 122.098	Cylinder rosettte 122.098		2	
Protuprovalni umetak 141.002	Security pin 141.002		4	
Vijak 433.093	Screw 433.093		6	
Vijak 433.130	Screw 433.130		12	
Vijak 433.131	Screw 433.131		12	

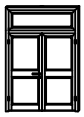




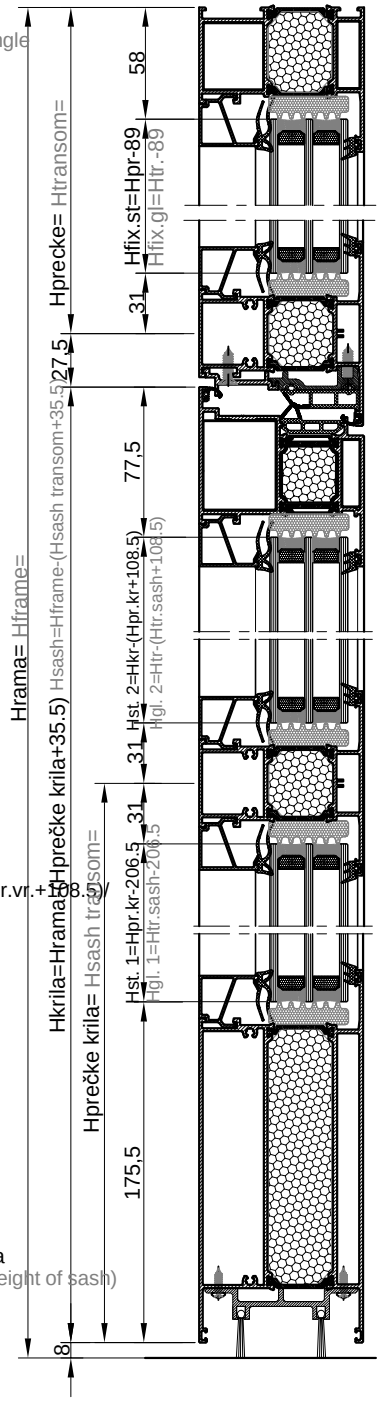
naziv name		mjera dimension	kom. pcs.	pilanje sawing angle
Ram FT-0513F	Frame FT-0513F	L	1	45-45
Ram FT-0513F	Frame FT-0513F	H	2	45-90
Krilo FT-0563F	Sash FT-0563F	(L/2)-57	4	45-45
Krilo FT-0563F	Sash FT-0563F	H-(Hpr+37.5)	4	45-45
Prag FT-0584F	Threshold FT-0584F	L-180	1	90-90
Okapnica F-0970	Drip cap profile F-0970	Lkr-58	2	90-90
Staklo lajsna Z40-667	Glazing bead Z40-667	L-99	2	90-90
Staklo lajsna Z40-667	Glazing bead Z40-667	Lkr-161	8	90-90
Staklo lajsna Z40-667	Glazing bead Z40-667	Hpr.-116	2	90-90
Staklo lajsna Z40-667	Glazing bead Z40-667	Hpr.vr.-147	4	90-90
Staklo lajsna Z40-667	Glazing bead Z40-667	H-(Hpr.+Hpr.vr.+184.5)	4	90-90
Prečka FT-0575F	Transom FT-0575F	L-87.5	1	90-90
Prečka na krilu FT-0575F	Transom-in sash FT-0575F	Lkr-151	2	90-90
Umetak rama F-1222	Additional profile F-1222	L-89	1	45-45
Umetak rama F-1222	Additional profile F-1222	H-(Hpr+17.7)	2	45-90
Profil kombatute FT-0571F	Flying mullion FT-0571F	Hkr-57	1	90-90
Kutna spojnica 710.145	Corner bracket 710.145		2	
Kutna spojnica 710.141	Corner bracket 710.141		8	
Kutna spojnica 710.136	Corner bracket 710.136		8	
Kutna spojnica 731.010	Corner bracket 731.010		8	
Kutna spojnica 710.091	Corner bracket 710.091		2	
Kutna spojnica 730.001	Corner bracket 730.001		18	
Veznik prečke 710.066	T bracket 710.066		12	
Veznik prečke 710.079	T bracket 710.079		4	
Veznik prečke 710.171	T bracket 710.171		8	
Centralna brtva rama 338.004	Central gasket-frame 338.004	1L+3Hkr		
Centralna brtva krila 338.006	Central gasket-sash 338.006	4Lkr+3Hkr		
Brtva na spoju rama i krila 317.002	Rebate gasket 317.002	1L+4Lkr+6Hkr		
Brtva prema staklu vanjska 328.003	Glazing gasket -external- 328.003	2L+8Lkr+2Hpr+4Hkr		
Brtva prema staklu unutarnja 311.004	Glazing gasket -internal- 311.004	2L+8Lkr+2Hpr+4Hkr		
Brtva praga 331.012	Threshold gasket 331.012	L-180	1	90-90
Izolacijski umetak 340.013	Underglass insulator 340.013	2(L-91.5)+2(Hpr.-89)		
Izolacijski umetak 340.013	Underglass insulator 340.013	8(Lkr.-151)+4(Hpr.vr.-118.5)+4/Hkr.-(Hpr.vr.+118.5)/		
Čep okapnice F-0970 375.001	End cap for F-0970 375.001		2 para	
Umetak na pragu 363.103	End cap for threshold 363.103		1 par	
Čep kombatute 363.014	End cap for flying mullion 363.014		1 par	
Umetak na ramu 374.043	Additional pvc profile 374.043	L-88	1	45-45
Umetak na ramu 374.043	Additional pvc profile 374.043	H-(Hpr+17)	2	45-90
Brava G-U Secury s MR2 (45) tri ključanja 122.015	Multipoint lock - G-U Secury MR2 (45) -122.015		1	
Brava G-U za pom. krilo (desna) 122.082	Lever-operated gear for passive leaf G-U (right) 122.082		1	
Gornji element za nastavljanje 122.026	Top shoot bolt unit 122.026		1	
Donji element za nastavljanje 122.027	Bottom shoot bolt unit 122.027		1	
Gornja prihvatna pločica 122.065	Top striking plate 122.065		1	
Donja prihvatna pločica 122.080	Bottom striking plate 122.080		1	
Trodijelna cilindrična šarka 112.011.01 - bijela	Barrel door hinge-3 part 112.011.01 - white	2 ili (3) po krilu ovisno o visini i tež.krila 2 or (3) per sash(dep. of height and weight of sash)		
Ručka za vrata 102.028	Door handle 102.028		2	
Četvrtka 102.025	Square spindle 102.025		1	
Cilindar (35-75) 122.095	Cylinder (35-75) 122.095		1	
Štitnik cilindra 122.098	Cylinder rosettte 122.098		2	
Protuprovalni umetak 141.002	Security pin 141.002		4	

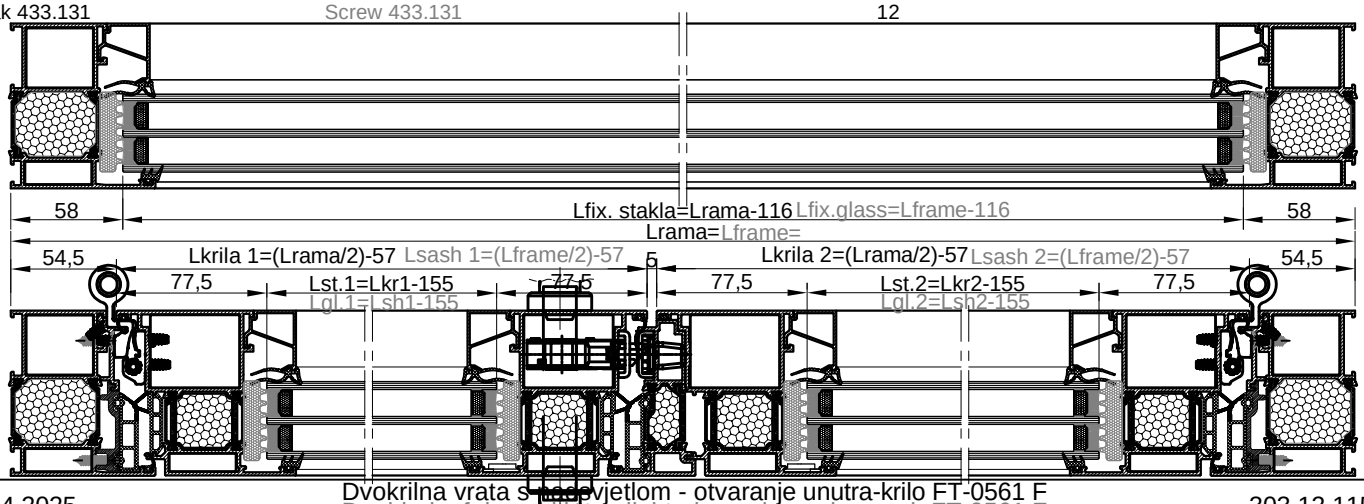




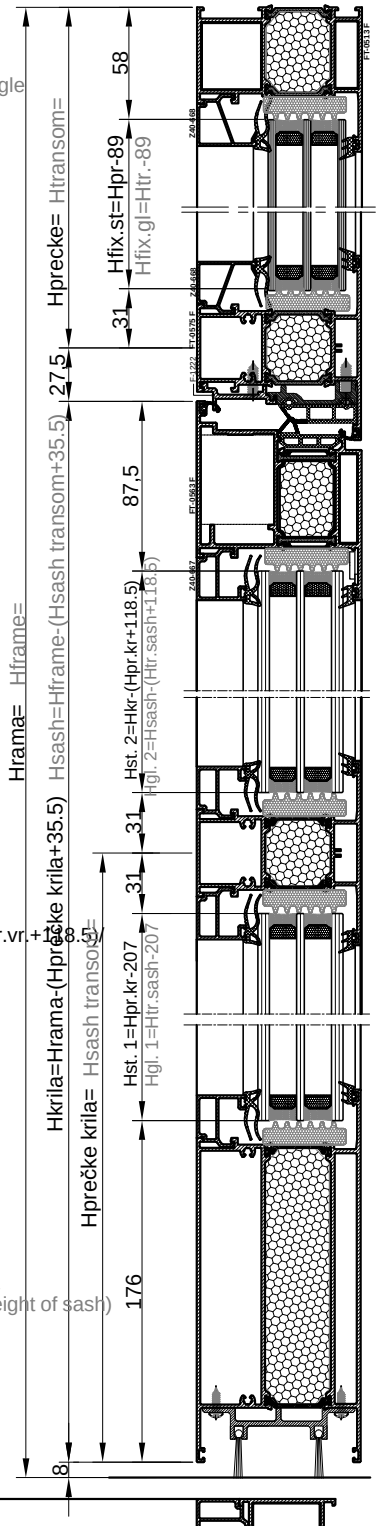


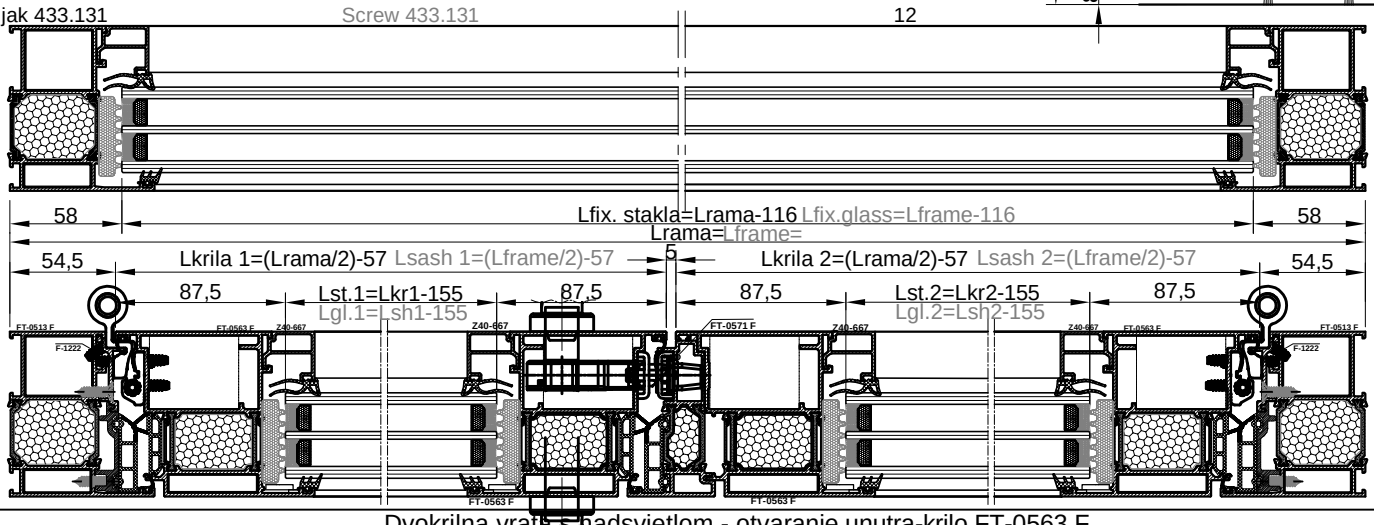
naziv name		mjera diemension	kom. pcs.	pilanje sawing angle
Ram FT-0513F	Frame FT-0513F	L	1	45-45
Ram FT-0513F	Frame FT-0513F	H	2	45-90
Krilo FT-0561F	Sash FT-0561F	(L/2)-57	2	45-45
Krilo FT-0561F	Sash FT-0561F	H-(Hpr.kr.+35.5)	4	45-90
Staklo lajsna Z40-668	Glazing bead Z40-668	L-99	2	90-90
Staklo lajsna Z40-668	Glazing bead Z40-668	Lkr-141	8	90-90
Staklo lajsna Z40-668	Glazing bead Z40-668	Hpr.-116	2	90-90
Staklo lajsna Z40-668	Glazing bead Z40-668	Hpr.vr.-233.5	4	90-90
Staklo lajsna Z40-668	Glazing bead Z40-668	H-(Hpr.+Hpr.vr.+172.5)	4	90-90
Prečka FT-0575F	Transom FT-0575F	L-87.5	1	90-90
Prečka na krilu FT-0575F	Transom-in sash FT-0575F	Lkr-128	2	90-90
Umetak rama F-1222	Additional profile F-1222	L-89.1	1	45-45
Umetak rama F-1222	Additional profile F-1222	H-(Hpr.+17.7)	2	45-90
Parapetna prečka FT-0576F	Tran.-bottom sash prof. FT-0576F	Lkr-128	2	90-90
Profil kombatute FT-0571F	Flying mullion FT-0571F	Hkr-28.5	1	90-90
Kutna spojnica 710.145	Corner bracket 710.145		2	
Kutna spojnica 710.141	Corner bracket 710.141		4	
Kutna spojnica 710.136	Corner bracket 710.136		4	
Kutna spojnica 731.010	Corner bracket 731.010		4	
Kutna spojnica 710.091	Corner bracket 710.091		2	
Kutna spojnica 730.001	Corner bracket 730.001		10	
Veznik prečke 710.066	T bracket 710.066		20	
Veznik prečke 710.079	T bracket 710.079		4	
Veznik prečke 710.171	T bracket 710.171		16	
Centralna brtva rama 338.004	Central gasket-frame 338.004	1L+3Hkr		
Centralna brtva krila 338.006	Central gasket-sash 338.006	2Lkr+3Hkr		
Brtva 317.002	Rebate gasket 317.002	1L+2Lkr+6Hkr		
Brtva prema staklu vanjska 328.003	Glazing gasket -external- 328.003	1L+2H+8Lkr+4Hkr		
Brtva prema staklu unutarnja 311.004	Glazing gasket -internal- 311.004	1L+2H+8Lkr+4Hkr		
Izolacijski umetak 340.013	Underglass insulator 340.013	2(L-91.5)+2(Hpr.-89)		
Izolacijski umetak 340.013	Underglass insulator 340.013	8(Lkr.-131)+4(Hpr.vr.-207)+4/Hkr.-(Hpr.vr.+138.5)/		
Čep kombatute 363.014	End cap for flying mullion 363.014		1 par	
Umetak na ramu 374.043	Additional pvc profile 374.043	L-88	1	45-45
Umetak na ramu 374.043	Additional pvc profile 374.043	H-(Hpr+17)	2	45-90
Pvc umetak u parap. prečki 374.048	Pvc prof. for transom /bottom sash prof./ 374.048	Lkr-18	1	90-90
Pvc umetak u parap. prečki 374.048	Pvc prof. for transom /bottom sash prof./ 374.048	Lkr-33	1	90-90
Četkasta brtva 347.001	Brush seal 347.001		4	
Brava G-U Secury s MR2 (35) tri ključanja 122.016	Multipoint lock - G-U Secury MR2 (35) -122.016		1	
Brava G-U za pom. krilo (desna) 122.082	Lever-operated gear for passive leaf G-U (right) 122.082		1	
Gornji element za nastavljanje 122.026	Top shoot bolt unit 122.026		1	
Donji element za nastavljanje 122.027	Bottom shoot bolt unit 122.027		1	
Gornja prihvatna pločica 122.065	Top striking plate 122.065		1	
Podna čahura za osovina Ø12 120.005	Brass floor socket (inside hole Ø12) 120.005		1	
Trodijelna cilindrična šarka 112.011.01 - bijela	Barrel door hinge-3 part 112.011.01 - white	2 ili (3) po krilu ovisno o visini i tež.krila 2 or (3) per sash(dep. of height and weight of sash)		
Ručka za vrata 102.028	Door handle 102.028		2	
Četvrtka 102.025	Square spindle 102.025		1	
Cilindar (35-75) 122.095	Cylinder (35-75) 122.095		1	
Štitnik cilindra 122.098	Cylinder rosettte 122.098		2	
Protuprovalni umetak 141.002	Security pin 141.002		4	
Vijak 433.130	Screw 433.130		12	
Vijak 433.131	Screw 433.131		12	

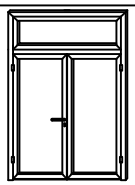




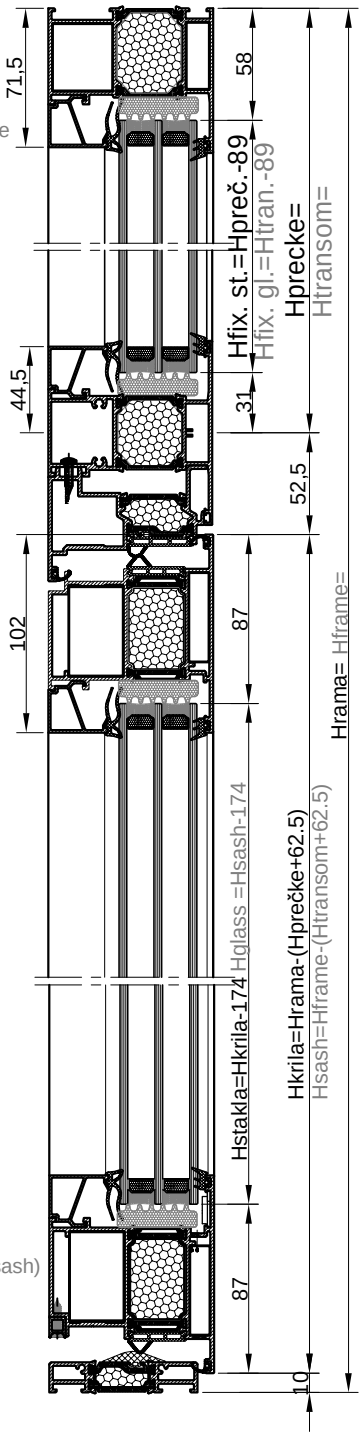
naziv name		mjera dimension	kom. pcs.	pilanje sawing angle
Ram FT-0513F	Frame FT-0513F	L	1	45-45
Ram FT-0513F	Frame FT-0513F	H	2	45-90
Krilo FT-0563F	Sash FT-0563F	(L/2)-57	2	45-45
Krilo FT-0563F	Sash FT-0563F	H-(Hpr.kr.+35.5)	4	45-90
Staklo lajsna Z40-667	Glazing bead Z40-667	L-99	2	90-90
Staklo lajsna Z40-667	Glazing bead Z40-667	Lkr-161	8	90-90
Staklo lajsna Z40-667	Glazing bead Z40-667	Hpr.-116	2	90-90
Staklo lajsna Z40-667	Glazing bead Z40-667	Hpr.vr.-233.5	4	90-90
Staklo lajsna Z40-667	Glazing bead Z40-667	H-(Hpr.+Hpr.vr.+182.5)	4	90-90
Prečka FT-0575F	Transom FT-0575F	L-87.5	1	90-90
Prečka na krilu FT-0575F	Transom-in sash FT-0575F	Lkr-151	2	90-90
Umetak rama F-1222	Additional profile F-1222	L-89	1	45-45
Umetak rama F-1222	Additional profile F-1222	H-(Hpr.+17.5)	2	45-90
Parapetna prečka FT-0576F	Tran.-bottom sash prof. FT-0576F	Lkr-151	2	90-90
Profil kombatute FT-0571F	Flying mullion FT-0571F	Hkr-28.5	1	90-90
Kutna spojnica 710.145	Corner bracket 710.145		2	
Kutna spojnica 710.141	Corner bracket 710.169		4	
Kutna spojnica 710.136	Corner bracket 710.136		4	
Kutna spojnica 731.010	Corner bracket 731.010		4	
Kutna spojnica 710.091	Corner bracket 710.091		2	
Kutna spojnica 730.001	Corner bracket 730.001		10	
Veznik prečke 710.066	T bracket 710.066		20	
Veznik prečke 710.079	T bracket 710.079		4	
Veznik prečke 710.171	T bracket 710.171		16	
Centralna brtva rama 338.004	Central gasket-frame 338.004	1L+3Hkr		
Centralna brtva krila 338.006	Central gasket-sash 338.006	2Lkr+3Hkr		
Brtva 317.002	Rebate gasket 317.002	1L+2Lkr+6Hkr		
Brtva prema staklu vanjska 328.003	Glazing gasket -external- 328.003	1L+2H+8Lkr+4Hkr		
Brtva prema staklu unutarnja 311.004	Glazing gasket -internal- 311.004	1L+2H+8Lkr+4Hkr		
Izolacijski umetak 340.013	Underglass insulator 340.013	2(L-91.5)+2(Hpr.-89)		
Izolacijski umetak 340.013	Underglass insulator 340.013	8(Lkr.-151)+4(Hpr.vr.-217)+4/Hkr.-(Hpr.vr.+118.5)		
Čep kombatute 363.014	End cap for flying mullion 363.014		1 par	
Umetak na ramu 374.043	Additional pvc profile 374.043	L-88	1	45-45
Umetak na ramu 374.043	Additional pvc profile 374.043	H-(Hpr+17)	2	45-90
Pvc umetak u parap. prečki 374.048	Pvc prof. for transom /bottom sash prof./ 374.048	Lkr-18	1	90-90
Pvc umetak u parap. prečki 374.048	Pvc prof. for transom /bottom sash prof./ 374.048	Lkr-33	1	90-90
Četkasta brtva 347.001	Brush seal 347.001		4	
Brava G-U Secury s MR2 (45) tri ključanja 122.015	Multipoint lock - G-U Secury MR2 (45) -122.015		1	
Brava G-U za pom. krilo (desna) 122.082	Lever-operated gear for passive leaf G-U (right) 122.082		1	
Gornji element za nastavljanje 122.026	Top shoot bolt unit 122.026		1	
Donji element za nastavljanje 122.027	Bottom shoot bolt unit 122.027		1	
Gornja prihvatna pločica 122.065	Top striking plate 122.065		1	
Podna čahura za osovina Ø12 120.005	Brass floor socket (inside hole Ø12) 120.005		1	
Trodijelna cilindrična šarka 112.011.01 - bijela	Barrel door hinge-3 part 112.011.01 - white	2 ili (3) po krilu ovisno o visini i tež.krila 2 or (3) per sash(dep. of height and weight of sash)		
Ručka za vrata 102.028	Door handle 102.028		2	
Četvrtka 102.025	Square spindle 102.025		1	
Cilindar (35-75) 122.095	Cylinder (35-75) 122.095		1	
Štitnik cilindra 122.098	Cylinder rosettte 122.098		2	
Protuprovalni umetak 141.002	Security pin 141.002		4	
Vijak 433.130	Screw 433.130		12	
Vijak 433.131	Screw 433.131		12	

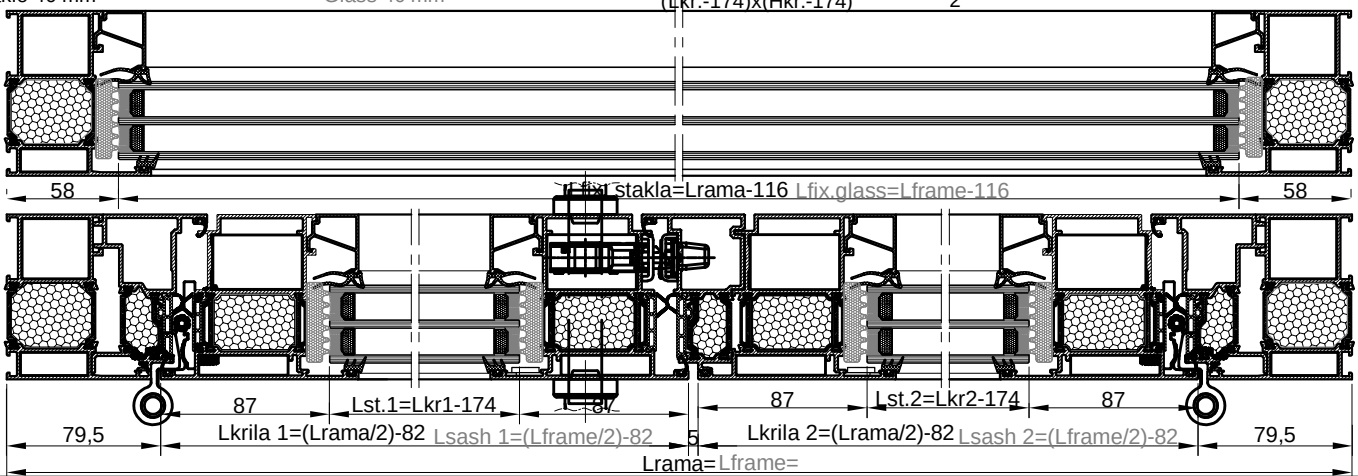


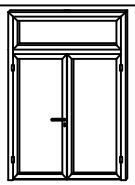




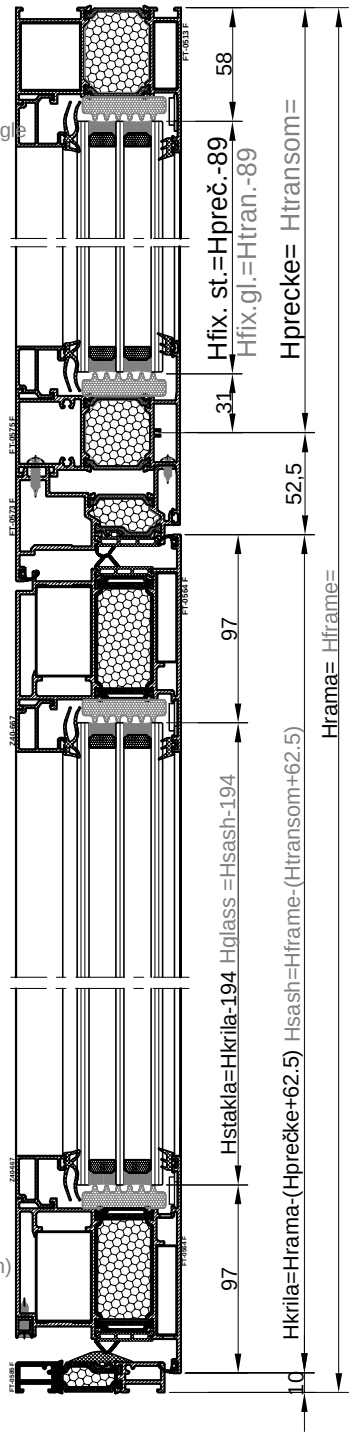
naziv name		mjera dimension	kom. pcs.	pilanje sawing angle
Ram FT-0513F	Frame FT-0513F	L	1	45-45
Ram FT-0513F	Frame FT-0513F	H	2	45-90
Krilo FT-0562F	Sash FT-0562F	L/2-82	4	45-45
Krilo FT-0562F	Sash FT-0562F	H-(Hpr.+62.5)	4	45-45
Umetak F-1188	Additional profile F-1188	Lkr-58	2	90-90
Prečka FT-0575F	Transom FT-0575F	L-87.5	1	90-90
Staklo lajsna Z40-668	Glazing bead Z40-668	L-99	2	90-90
Staklo lajsna Z40-668	Glazing bead Z40-668	Lkr-160	4	90-90
Staklo lajsna Z40-668	Glazing bead Z40-668	Hpr.-116	2	90-90
Staklo lajsna Z40-668	Glazing bead Z40-668	Hkr-204	4	90-90
Prag FT-0585F	Threshold FT-0585F	L-217	1	90-90
Umetak FT-0573F	Additional profile FT-0573F	L-87.5	1	45-45
Umetak FT-0573F	Additional profile FT-0573F	H-(Hpr.+17)	2	45-90
Profil kombatute FT-0572F	Flying mullion FT-0572F	Hkr-65	1	90-90
Kutna spojnica 710.145	Corner bracket 710.145		2	
Kutna spojnica 710.133	Corner bracket 710.133		8	
Kutna spojnica 710.091	Corner bracket 710.091		2	
Kutna spojnica 710.134	Corner bracket 710.134		8	
Kutna spojnica 731.010	Corner bracket 731.010		8	
Kutna spojnica 730.001	Corner bracket 730.001		18	
Veznik prečke 710.066	T bracket 710.066		4	
Veznik prečke 710.079	T bracket 710.079		4	
Centralna brtva rama 338.009	Central gasket-frame 338.009	1Lrama+3Hkr		
Centralna brtva krila 338.010	Central gasket-sash 338.010	4Lkr+3Hkr		
Brtva prema staklu vanjska 328.003	Glazing gasket -external- 328.003	2Lrama+4Lkr+2Hpreč.+4Hkr		
Brtva prema staklu unutarnja 311.004	Glazing gasket -internal- 311.004	2Lrama+4Lkr+2Hpreč.+4Hkr		
Brtva na spoju rama i krila 317.002	Rebate gasket 317.002	1Lrama+4Lkr+6Hkr		
Brtva praga 331.012	Threshold gasket 331.012	L-217	1	
Izolacijski umetak 340.013	Underglass insulator 340.013	2(L-91.5)+2(Hpr.-89)		90-90
Izolacijski umetak 340.013	Underglass insulator 340.013	4(Lkr.-150)+4(Hkr.-174)		
Umetak na pragu 373.020	End cap for threshold 373.020		1 par	
Čep kombatute 363.016	End cap for flying mullion 363.016		1 par	
Brava G-U Secury s MR2 (35) tri ključanja 122.016	Multipoint lock - G-U Secury MR2 (35) -122.016		1	
Brava G-U za pom. krilo (lijeva) 122.025	Lever-operated gear for passive leaf G-U (left) 122.025		1	
Gornji element za nastavljanje 122.026	Top shoot bolt unit 122.026		1	
Donji element za nastavljanje 122.027	Bottom shoot bolt unit 122.027		1	
Gornja prihvatna pločica 122.065	Top striking plate 122.065		1	
Donja prihvatna pločica 122.080	Bottom striking plate 122.080		1	
Trodijelna cilindrična šarka 112.012.01 - bijela	Barrel door hinge-3 part 112.012.01 -white	2 ili (3) po krilu ovisno o visini i tež.krila 2 or (3) per sash(dep. of height and weight of sash)		
Ručka za vrata 102.028	Door handle 102.028		2	
Četvrtka 102.025	Square spindle 102.025		1	
Cilindar (35-75) 122.095	Cylinder (35-75) 122.095		1	
Štitnik cilindra 122.098	Cylinder rosettte 122.098		2	
Protuprovalni umetak 141.002	Security pin 141.002		4	
Staklo 40 mm	Glass 40 mm	(L-116)x(Hpr.-89)		1
Staklo 40 mm	Glass 40 mm	(Lkr.-174)x(Hkr.-174)		2

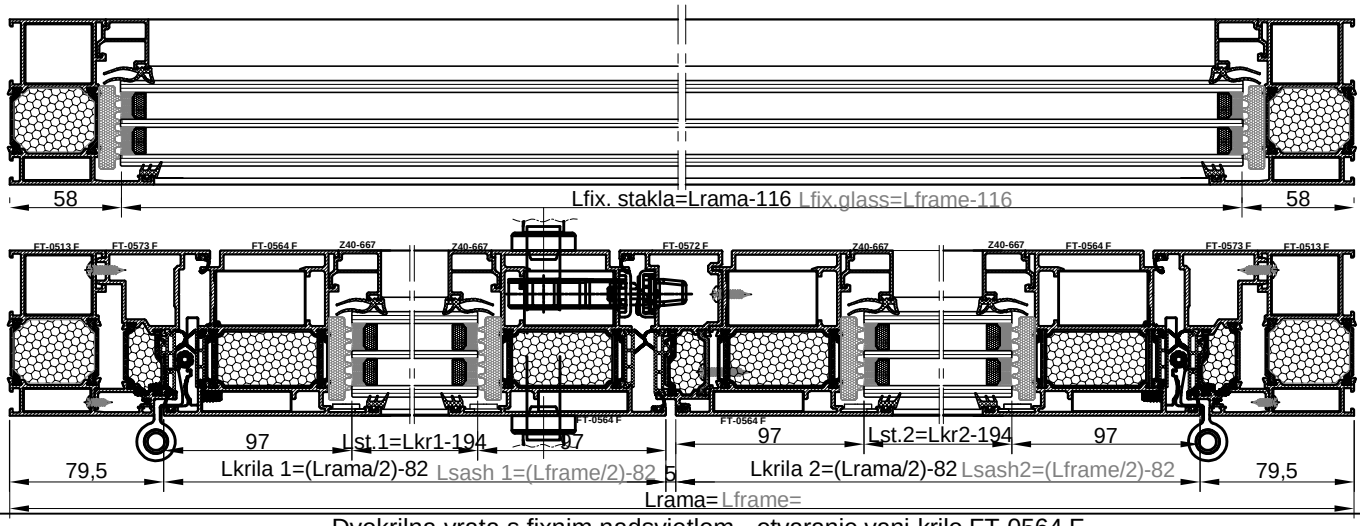


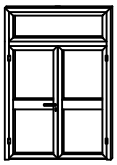




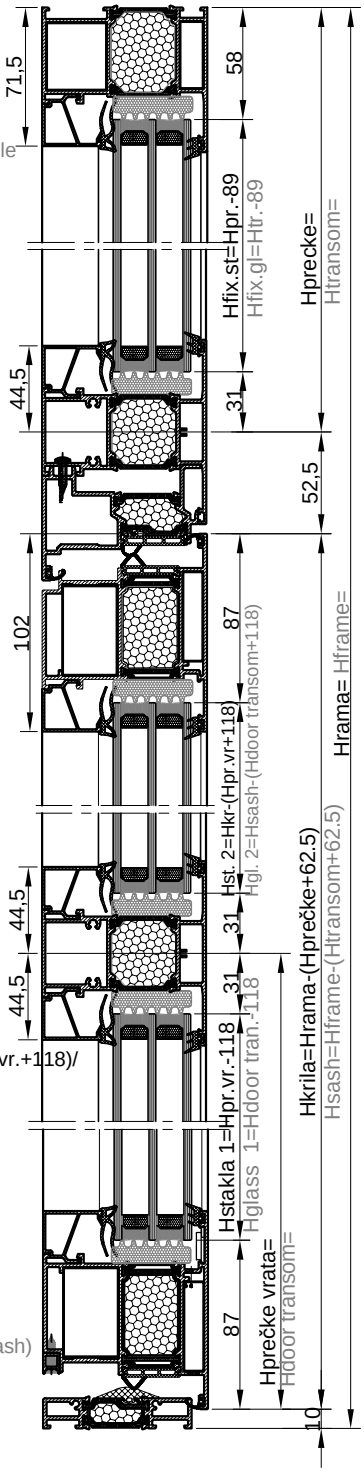
naziv name		mjera dimension	kom. pcs.	pilanje sawing angle
Ram FT-0513F	Frame FT-0513F	L	1	45-45
Ram FT-0513F	Frame FT-0513F	H	2	45-90
Krilo FT-0564F	Sash FT-0564F	L/2-82	4	45-45
Krilo FT-0564F	Sash FT-0564F	H-(Hpr.+62.5)	4	45-45
Umetak F-1188	Additional profile F-1188	Lkr-58	2	90-90
Prečka FT-0575F	Transom FT-0575F	L-87.5	1	90-90
Staklo lajsna Z40-667	Glazing bead Z40-667	L-99	2	90-90
Staklo lajsna Z40-667	Glazing bead Z40-667	Lkr-180	4	90-90
Staklo lajsna Z40-667	Glazing bead Z40-667	Hpr.-116	2	90-90
Staklo lajsna Z40-667	Glazing bead Z40-667	Hkr-224	4	90-90
Prag FT-0585F	Threshold FT-0585F	L-217	1	90-90
Umetak FT-0573F	Additional profile FT-0573F	L-87.5	1	45-45
Umetak FT-0573F	Additional profile FT-0573F	H-(Hpr.+17)	2	45-90
Profil kombatute FT-0572F	Flying mullion FT-0572F	Hkr-65	1	90-90
Kutna spojnica 710.145	Corner bracket 710.145		2	
Kutna spojnica 710.133	Corner bracket 710.133		8	
Kutna spojnica 710.091	Corner bracket 710.091		2	
Kutna spojnica 710.134	Corner bracket 710.134		8	
Kutna spojnica 731.010	Corner bracket 731.010		8	
Kutna spojnica 730.001	Corner bracket 730.001		18	
Veznik prečke 710.066	T bracket 710.066		4	
Veznik prečke 710.079	T bracket 710.079		4	
Centralna brtva rama 338.009	Central gasket-frame 338.009	1Lrama+3Hkr		
Centralna brtva krila 338.010	Central gasket-sash 338.010	4Lkr+3Hkr		
Brtva prema staklu vanjska 328.003	Glazing gasket -external- 328.003	2Lrama+4Lkr+2Hpreč.+4Hkr		
Brtva prema staklu unutarnja 311.004	Glazing gasket -internal- 311.004	2Lrama+4Lkr+2Hpreč.+4Hkr		
Brtva na spoju rama i krila 317.002	Rebate gasket 317.002	1Lrama+4Lkr+6Hkr		
Brtva praga 331.012	Threshold gasket 331.012	L-217	1	
Izolacijski umetak 340.013	Underglass insulator 340.013	2(L-91.5)+2(Hpr.-89)		90-90
Izolacijski umetak 340.013	Underglass insulator 340.013	4(Lkr.-170)+4(Hkr.-194)		
Umetak na pragu 373.020	End cap for threshold 373.020		1 par	
Čep kombatute 363.016	End cap for flying mullion 363.016		1 par	
Brava G-U Secury s MR2 (45) tri ključanja 122.015	Multipoint lock - G-U Secury MR2 (45) -122.015		1	
Brava G-U za pom. krilo (lijeva) 122.025	Lever-operated gear for passive leaf G-U (left) 122.025		1	
Gornji element za nastavljanje 122.026	Top shoot bolt unit 122.026		1	
Donji element za nastavljanje 122.027	Bottom shoot bolt unit 122.027		1	
Gornja prihvatna pločica 122.065	Top striking plate 122.065		1	
Donja prihvatna pločica 122.080	Bottom striking plate 122.080		1	
Trodijelna cilindrična šarka 112.012.01 - bijela	Barrel door hinge-3 part 112.012.01 - white	2 ili (3) po krilu ovisno o visini i tež.krila 2 or (3) per sash(dep. of height and weight of sash)		
Ručka za vrata 102.028	Door handle 102.028		2	
Četvrtka 102.025	Square spindle 102.025		1	
Cilindar (35-75) 122.095	Cylinder (35-75) 122.095		1	
Štitnik cilindra 122.098	Cylinder rosettte 122.098		2	
Protuprovalni umetak 141.002	Security pin 141.002		4	

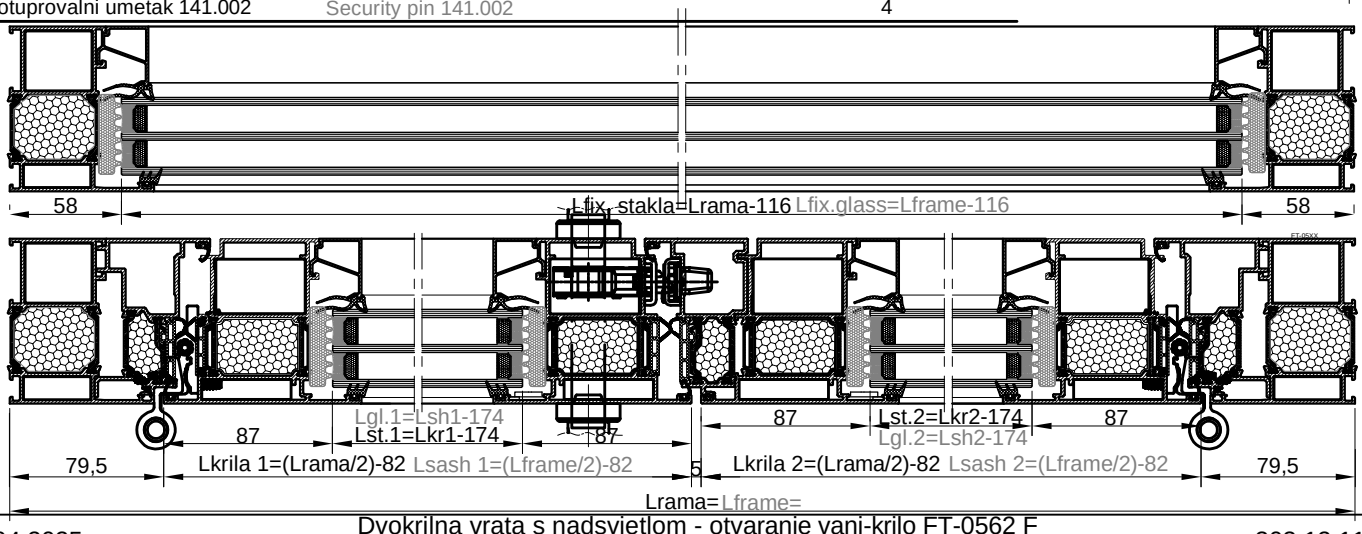


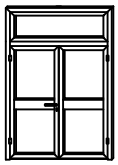




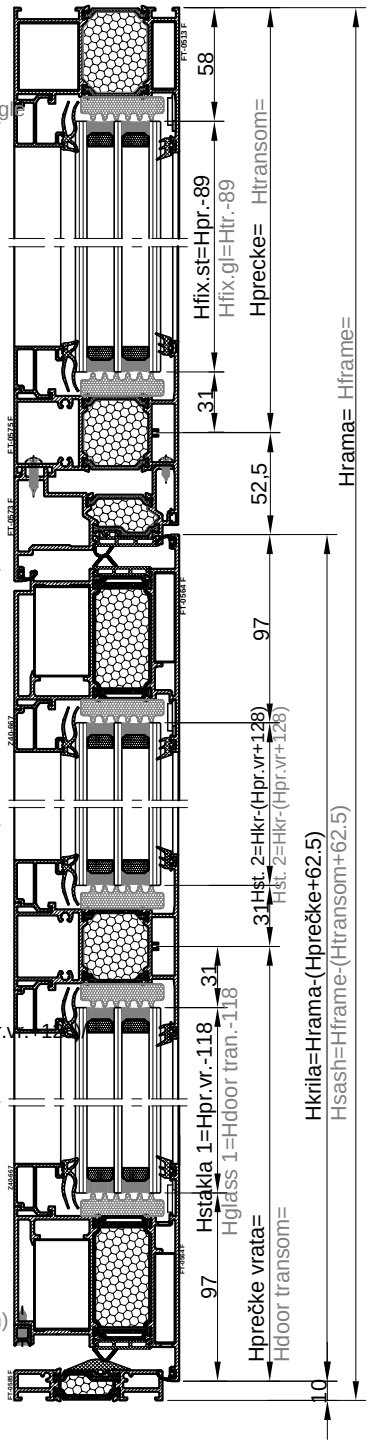
naziv name		mjera dimension	kom. pcs.	pilanje sawing angle
Ram FT-0513F	Frame FT-0513F	L	1	45-45
Ram FT-0513F	Frame FT-0513F	H	2	45-90
Krilo FT-0562F	Sash FT-0562F	L/2-82	4	45-45
Krilo FT-0562F	Sash FT-0562F	H-(Hpr.+62.5)	4	45-90
Umetak F-1188	Additional profile F-1188	Lkr-58	2	90-90
Prečka FT-0575F	Transom FT-0575F	L-87.5	1	90-90
Prečka na krilu FT-0575F	Transom-in sash FT-0575F	Lkr.-147	2	90-90
Staklo lajsna Z40-668	Glazing bead Z40-668	L-99	2	90-90
Staklo lajsna Z40-668	Glazing bead Z40-668	Lkr-160	8	90-90
Staklo lajsna Z40-668	Glazing bead Z40-668	Hpr.-116	2	90-90
Staklo lajsna Z40-668	Glazing bead Z40-668	Hpr.vr.-146.5	4	90-90
Staklo lajsna Z40-668	Glazing bead Z40-668	Hkr-(Hpreč.+146.5)	4	90-90
Prag FT-0585F	Threshold FT-0585F	L-217	1	90-90
Umetak FT-0573F	Additional profile FT-0573F	L-87.5	1	45-45
Umetak FT-0573F	Additional profile FT-0573F	H-(Hpreč.+17)	2	45-90
Profil kombatute FT-0572F	Flying mullion FT-0572F	Hkr-65	1	90-90
Kutna spojnica 710.145	Corner bracket 710.145		2	
Kutna spojnica 710.133	Corner bracket 710.133		8	
Kutna spojnica 710.091	Corner bracket 710.091		2	
Kutna spojnica 710.134	Corner bracket 710.134		8	
Kutna spojnica 731.010	Corner bracket 731.010		8	
Kutna spojnica 730.001	Corner bracket 730.001		18	
Veznik prečke 710.066	T bracket 710.066		12	
Veznik prečke 710.079	T bracket 710.079		4	
Veznik prečke 710.171	T bracket 710.171		8	
Centralna brtva rama 338.009	Central gasket-frame 338.009	1 Lrama+3 Hkr		
Centralna brtva krila 338.010	Central gasket-sash 338.010	4 Lkr+3 Hkr		
Brtva prema staklu vanjska 328.003	Glazing gasket -external- 328.003	2 Lrama+8 Lkr+2 Hpr+4 Hkr		
Brtva prema staklu unutarnja 311.004	Glazing gasket -internal- 311.004	2 Lrama+8 Lkr+2 Hpr+4 Hkr		
Brtva na spoju rama i krila 317.002	Rebate gasket 317.002	1 Lrama+4 Lkr+6 Hkr		
Brtva praga 331.012	Threshold gasket 331.012	L-217	1	90-90
Izolacijski umetak 340.013	Underglass insulator 340.013	2(L-91.5)+2(Hpr.-89)		
Izolacijski umetak 340.013	Underglass insulator 340.013	8(Lkr.-150)+4(Hpr.vr.-118)+4/Hkr.-(Hpr.vr.+118)/		
Umetak na pragu 373.020	End cap for threshold 373.020		1 par	
Čep kombatute 363.016	End cap for flying mullion 363.016		1 par	
Brava G-U Secury s MR2 (35) tri ključanja 122.016	Multipoint lock - G-U Secury MR2 (35) -122.016		1	
Brava G-U za pom. krilo (lijeva) 122.025	Lever-operated gear for passive leaf G-U (left) 122.025		1	
Gornji element za nastavljanje 122.026	Top shoot bolt unit 122.026		1	
Donji element za nastavljanje 122.027	Bottom shoot bolt unit 122.027		1	
Gornja prihvatna pločica 122.065	Top striking plate 122.065		1	
Donja prihvatna pločica 122.080	Bottom striking plate 122.080		1	
Trodijelna cilindrična šarka 112.012.01 - bijela	Barrel door hinge-3 part 112.012.01 - white	2 ili (3) po krilu ovisno o visini i tež.krila 2 or (3) per sash(dep. of height and weight of sash)		
Ručka za vrata 102.028	Door handle 102.028		2	
Četvrtka 102.025	Square spindle 102.025		1	
Cilindar (35-75) 122.095	Cylinder (35-75) 122.095		1	
Štitnik cilindra 122.098	Cylinder rosettte 122.098		2	
Protuprovalni umetak 141.002	Security pin 141.002		4	

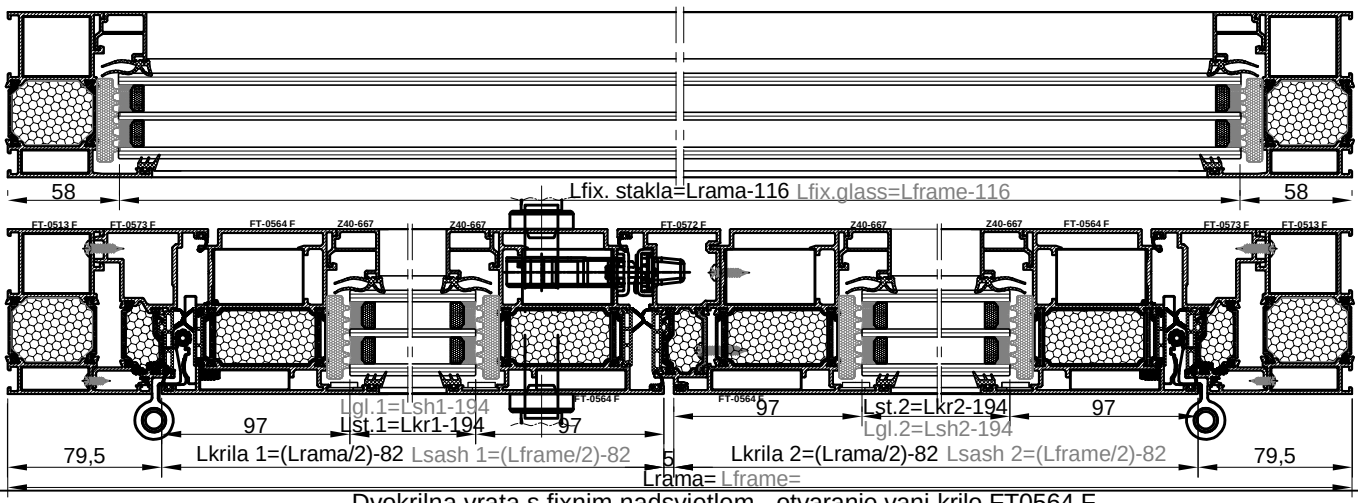


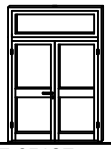




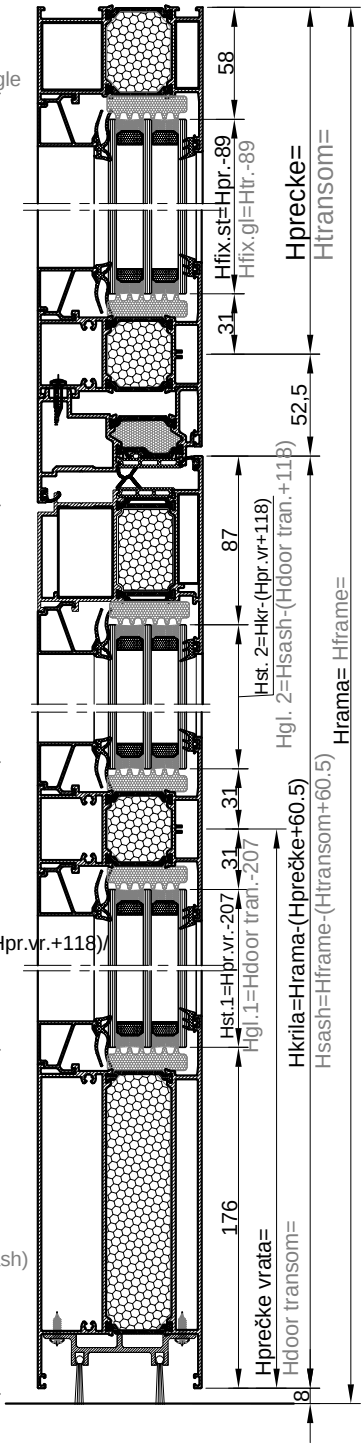
naziv name		mjera dimension	kom. pcs.	pilanje sawing angle
Ram FT-0513F	Frame FT-0513F	L	1	45-45
Ram FT-0513F	Frame FT-0513F	H	2	45-90
Krilo FT-0564F	Sash FT-0564F	L/2-82	4	45-45
Krilo FT-0564F	Sash FT-0564F	H-(Hpr.+62.5)	4	45-45
Umetak F-1188	Additional profile F-1188	Lkr-58	2	90-90
Prečka FT-0575F	Transom FT-0575F	L-87.5	1	90-90
Prečka na krilu FT-0575F	Transom-in sash FT-0575F	Lkr.-167	2	90-90
Staklo lajsna Z40-667	Glazing bead Z40-667	L-99	2	90-90
Staklo lajsna Z40-667	Glazing bead Z40-667	Lkr-180	8	90-90
Staklo lajsna Z40-667	Glazing bead Z40-667	Hpr.-116	2	90-90
Staklo lajsna Z40-667	Glazing bead Z40-667	Hpr.vr.-156.5	4	90-90
Staklo lajsna Z40-667	Glazing bead Z40-667	Hkr-(Hpreč.+156.5)	4	90-90
Prag FT-0585F	Threshold FT-0585 F	L-217	1	90-90
Umetak FT-0573F	Additional profile FT-0573F	L-87.5	1	45-45
Umetak FT-0573F	Additional profile FT-0573F	H-(Hpreč.+17)	2	45-90
Profil kombatute FT-0572F	Flying mullion FT-0572F	Hkr-65	1	90-90
Kutna spojnica 710.145	Corner bracket 710.145		2	
Kutna spojnica 710.133	Corner bracket 710.133		8	
Kutna spojnica 710.091	Corner bracket 710.091		2	
Kutna spojnica 710.134	Corner bracket 710.134		8	
Kutna spojnica 731.010	Corner bracket 731.010		8	
Kutna spojnica 730.001	Corner bracket 730.001		18	
Veznik prečke 710.066	T bracket 710.066		12	
Veznik prečke 710.079	T bracket 710.079		4	
Veznik prečke 710.171	T bracket 710.171		8	
Centralna brtva rama 338.009	Central gasket-frame 338.009	2 Lkr+3 Hkr		
Centralna brtva krila 338.010	Central gasket-sash 338.010	4 Lkr+3 Hkr		
Brtva prema staklu vanjska 328.003	Glazing gasket -external- 328.003	2 Lrama+8 Lkr+2 Hpr+4 Hkr		
Brtva prema staklu unutarnja 311.004	Glazing gasket -internal- 311.004	2 Lrama+8 Lkr+2 Hpr+4 Hkr		
Brtva na spoju rama i krila 317.002	Rebate gasket 317.002	1 Lrama+4 Lkr+6 Hkr		
Brtva praga 331.012	Threshold gasket 331.012	L-217	1	90-90
Izolacijski umetak 340.013	Underglass insulator 340.013	2(L-91.5)+2(Hpr.-89)		
Izolacijski umetak 340.013	Underglass insulator 340.013	8(Lkr.-170)+4(Hpr.vr.-118)+4/Hkr.-(Hpr.vr.+128)		
Umetak na pragu 373.020	End cap for threshold 373.020		1 par	
Čep kombatute 363.016	End cap for flying mullion 363.016		1 par	
Brava G-U Secury s MR2 (45) tri ključanja 122.015	Multipoint lock - G-U Secury MR2 (45) -122.015		1	
Brava G-U za pom. krilo (lijeva) 122.025	Lever-operated gear for passive leaf G-U (left) 122.025		1	
Gornji element za nastavljanje 122.026	Top shoot bolt unit 122.026		1	
Donji element za nastavljanje 122.027	Bottom shoot bolt unit 122.027		1	
Gornja prihvatna pločica 122.065	Top striking plate 122.065		1	
Donja prihvatna pločica 122.080	Bottom striking plate 122.080		1	
Trodijelna cilindrična šarka 112.012.01 - bijela	Barrel door hinge-3 part 112.012.01 - white	2 ili (3) po krilu ovisno o visini i tež.krila 2 or (3) per sash(dep. of height and weight of sash)		
Ručka za vrata 102.028	Door handle 102.028		2	
Četvrtka 102.025	Square spindle 102.025		1	
Cilindar (35-75) 122.095	Cylinder (35-75) 122.095		1	
Štitnik cilindra 122.098	Cylinder rosettte 122.098		2	
Protuprovalni umetak 141.002	Security pin 141.002		4	

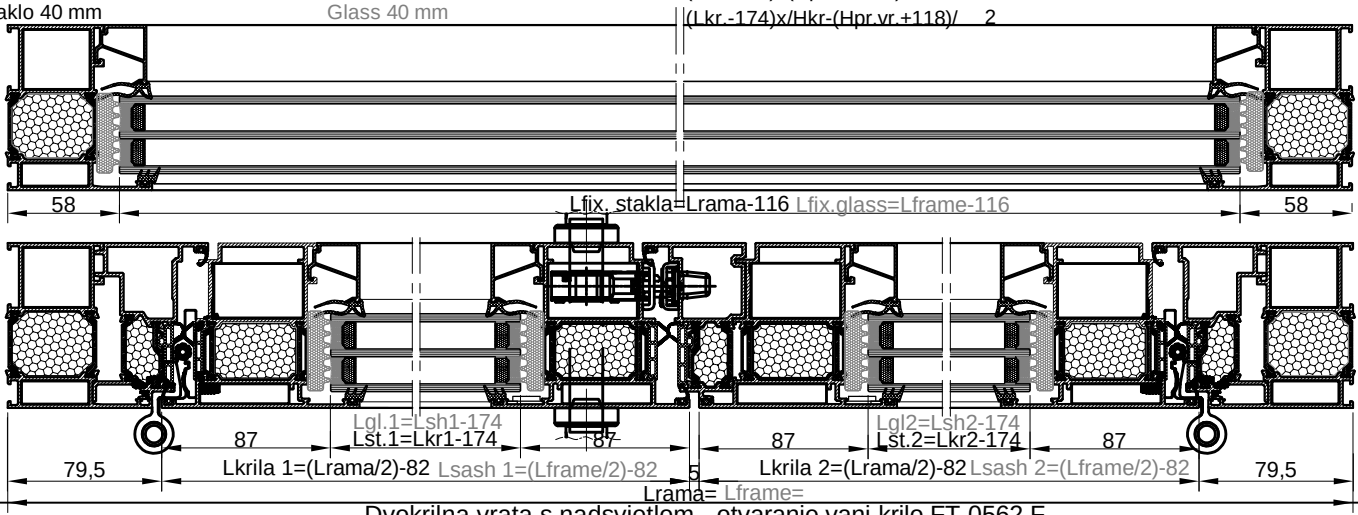


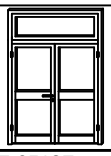




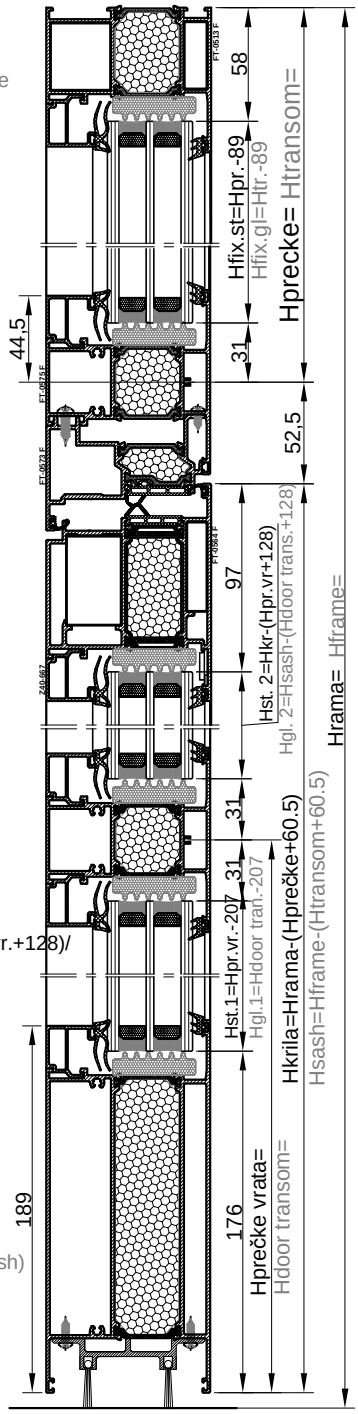
naziv name		mjera dimension	kom. pcs.	pilanje sawing angle
Ram FT-0513F	Frame FT-0513F	L	1	45-45
Ram FT-0513F	Frame FT-0513F	H	2	45-90
Krilo FT-0562F	Sash FT-0562F	L/2-82	2	45-45
Krilo FT-0562F	Sash FT-0562F	H-(Hpr.+60.5)	4	45-90
Prečka FT-0575F	Transom FT-0575F	L-87.5	1	90-90
Prečka na krilu FT-0575F	Transom-in sash FT-0575F	Lkr-147	2	90-90
Staklo lajsna Z40-668	Glazing bead Z40-668	L-99	2	90-90
Staklo lajsna Z40-668	Glazing bead Z40-668	Lkr-160	8	90-90
Staklo lajsna Z40-668	Glazing bead Z40-668	Hpr.-116	2	90-90
Staklo lajsna Z40-668	Glazing bead Z40-668	Hpr.vr.-233.5	4	90-90
Staklo lajsna Z40-668	Glazing bead Z40-668	H-(Hpr.+Hpr.vr.+207)	4	90-90
Parapetna prečka FT-0576F	Transom-bottom sash profile FT-0576F	Lkr-147	2	90-90
Umetak FT-0573F	Additional profile FT-0573F	L-87.5	1	45-45
Umetak FT-0573F	Additional profile FT-0573F	H-(Hpr+17)	2	45-90
Profil kombatute FT-0572F	Flying mullion FT-0572F	Hkr-32.5	1	90-90
Kutna spojnica 710.145	Corner bracket 710.145		2	
Kutna spojnica 710.133	Corner bracket 710.133		4	
Kutna spojnica 710.091	Corner bracket 710.091		2	
Kutna spojnica 710.134	Corner bracket 710.134		4	
Kutna spojnica 731.010	Corner bracket 731.010		4	
Kutna spojnica 730.001	Corner bracket 730.001		12	
Veznik prečke 710.066	T bracket 710.066		20	
Veznik prečke 710.079	T bracket 710.079		4	
Veznik prečke 710.171	T bracket 710.171		16	
Centralna brtva rama 338.009	Central gasket-frame 338.009	1L+3Hkr		
Centralna brtva krila 338.010	Central gasket-sash 338.010	2Lkr+3Hkr		
Brtva prema staklu vanjska 328.003	Glazing gasket -external- 328.003	1L+8Lkr+2Hpr+4Hkr		
Brtva prema staklu unutarnja 311.004	Glazing gasket -internal- 311.004	1L+8Lkr+2Hpr+4Hkr		
Brtva na spoju rama i krila 317.002	Rebate gasket 317.002	1L+2Lkr+6Hkr		
Izolacijski umetak 340.013	Underglass insulator 340.013	2(L-91.5)+2(Hpr.-89)		
Izolacijski umetak 340.013	Underglass insulator 340.013	8(Lkr.-150)+4(Hpr.vr.-207)+4/Hkr.-(Hpr.vr.+118)/		
Čep kombatute 363.016	End cap for flying mullion 363.016		1 par	
Pvc umetak 374.048	Pvc profile 374.048	Lkr-54	1	
Pvc umetak 374.048	Pvc profile 374.048	Lkr-19	1	
Četkasta brtva 347.001	Brush seal 347.001		4	
Brava G-U Secury s MR2 (35) tri ključanja 122.016	Multipoint lock - G-U Secury MR2 (35) -122.016		1	
Brava G-U za pom. krilo (lijeva) 122.025	Lever-operated gear for passive leaf G-U (left) 122.025		1	
Gornji element za nastavljanje 122.026	Top shoot bolt unit 122.026		1	
Donji element za nastavljanje 122.027	Bottom shoot bolt unit 122.027		1	
Gornja prihvatna pločica 122.065	Top striking plate 122.065		1	
Podna čahura za Ø12 120.005	Brass floor socket (inside hole Ø12) 120.005		1	
Trodijelna cilindrična šarka 112.012.01 - bijela	Barrel door hinge-3 part 112.012.01 - white	2 ili (3) po krilu ovisno o visini i tež.krila 2 or (3) per sash(dep. of height and weight of sash)		
Ručka za vrata 102.028	Door handle 102.028		2	
Četvrtka 102.025	Square spindle 102.025		1	
Cilindar (35-75) 122.095	Cylinder (35-75) 122.095		1	
Štitnik cilindra 122.098	Cylinder rosette 123.001.01 - white		2	
Protuprovalni umetak 141.002	Security pin 141.002		4	
Staklo 40 mm	Glass 40 mm	(L-116)x(Hpr.-89)	1	
Staklo 40 mm	Glass 40 mm	(Lkr.-174)x(Hpr.vr.-207)	2	
Staklo 40 mm	Glass 40 mm	(Lkr.-174)x/Hkr-(Hpr.vr.+118)/	2	

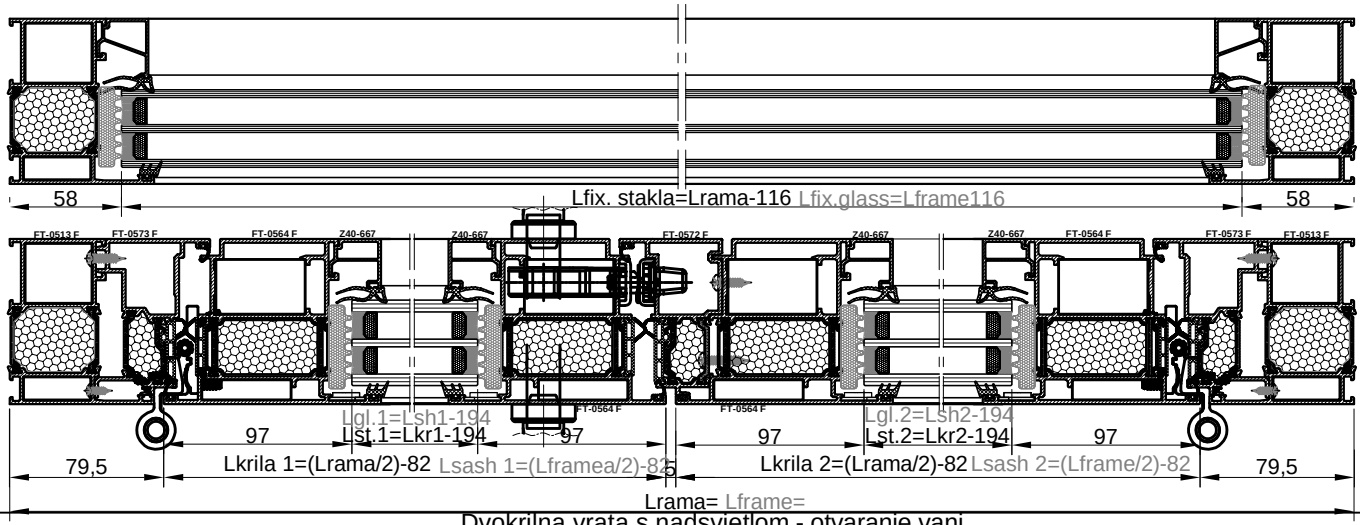






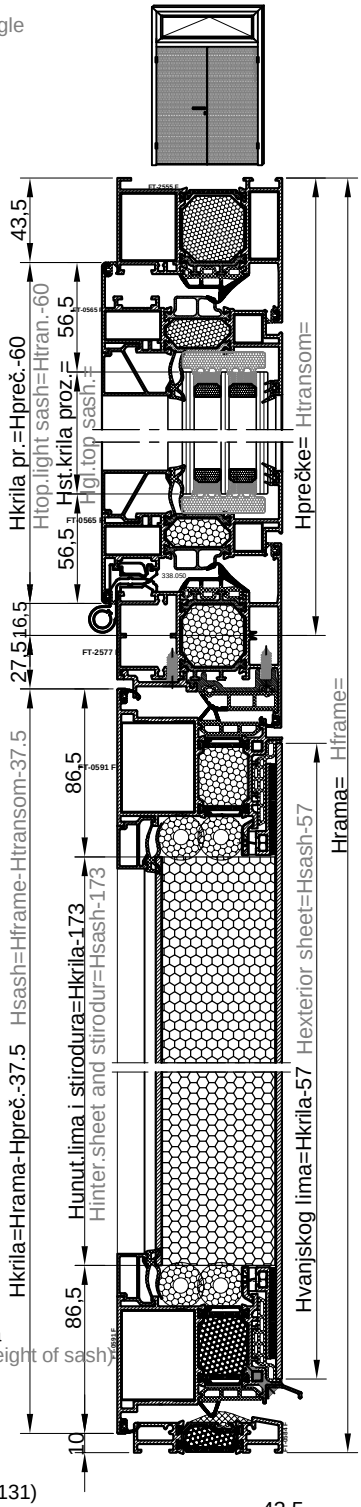
naziv name		mjera dimension	kom. pcs.	pilanje sawing angle
Ram FT-0513F	Frame FT-0513F	L	1	45-45
Ram FT-0513F	Frame FT-0513F	H	2	45-90
Krilo FT-0564F	Sash FT-0564F	L/2-82	2	45-45
Krilo FT-0564F	Sash FT-0564F	H-(Hpr.+60.5)	4	45-90
Prečka FT-0575F	Transom FT-0575F	L-87.5	1	90-90
Prečka na krilu FT-0575F	Transom-in sash FT-0575F	Lkr-167	2	90-90
Staklo lajsna Z40-667	Glazing bead Z40-667	L-99	2	90-90
Staklo lajsna Z40-667	Glazing bead Z40-667	Lkr-180	8	90-90
Staklo lajsna Z40-667	Glazing bead Z40-667	Hpr.-116	2	90-90
Staklo lajsna Z40-667	Glazing bead Z40-667	Hpr.vr.-233.5	4	90-90
Staklo lajsna Z40-667	Glazing bead Z40-667	H-(Hpr.+Hpr.vr.+217)	4	90-90
Parapetna prečka FT-0576F	Tran.-bottom sash prof. FT-0576F	Lkr-167	2	90-90
Umetak FT-0573F	Additional profile FT-0573F	L-87.5	1	45-45
Umetak FT-0573F	Additional profile FT-0573F	H-(Hpr+17)	2	45-90
Profil kombatute FT-0572F	Flying mullion FT-0572F	Hkr-32.5	1	90-90
Kutna spojnica 710.145	Corner bracket 710.145		2	
Kutna spojnica 710.133	Corner bracket 710.133		4	
Kutna spojnica 710.091	Corner bracket 710.091		2	
Kutna spojnica 710.134	Corner bracket 710.134		4	
Kutna spojnica 731.010	Corner bracket 731.010		4	
Kutna spojnica 730.001	Corner bracket 730.001		10	
Veznik prečke 710.066	T bracket 710.066		20	
Veznik prečke 710.079	T bracket 710.079		4	
Veznik prečke 710.171	T bracket 710.171		16	
Centralna brtva rama 338.009	Central gasket-frame 338.009	1L+3Hkr		
Centralna brtva krila 338.010	Central gasket-sash 338.010	2Lkr+3Hkr		
Brtva prema staklu vanjska 328.003	Glazing gasket -external- 328.003	1L+8Lkr+2Hpr+4Hkr		
Brtva prema staklu unutarnja 311.004	Glazing gasket -internal- 311.004	1L+8Lkr+2Hpr+4Hkr		
Brtva na spoju rama i krila 317.002	Rebate gasket 317.002	1L+2Lkr+6Hkr		
Izolacijski umetak 340.013	Underglass insulator 340.013	2(L-91.5)+2(Hpr.-89)		
Izolacijski umetak 340.013	Underglass insulator 340.013	8(Lkr.-170)+4(Hpr.vr.-207)+4/Hkr.-(Hpr.vr.+128)/		
Čep kombatute 363.016	End cap for flying mullion 363.016		1 par	
Pvc umetak 374.048	Pvc profile 374.048	Lkr-54	1	
Pvc umetak 374.048	Pvc profile 374.048	Lkr-19	1	
Četkasta brtva 347.001	Brush seal 347.001		4	
Brava G-U Secury s MR2 (45) tri ključanja 122.015	Multipoint lock - G-U Secury MR2 (45) -122.015		1	
Brava G-U za pom. krilo (lijeva) 122.025	Lever-operated gear for passive leaf G-U (left) 122.025		1	
Gornji element za nastavljanje 122.026	Top shoot bolt unit 122.026		1	
Donji element za nastavljanje 122.027	Bottom shoot bolt unit 122.027		1	
Gornja prihvatna pločica 122.065	Top striking plate 122.065		1	
Podna čahura za Ø12 120.005	Brass floor socket (inside hole Ø12) 120.005		1	
Trodijelna cilindrična šarka 112.012.01 - bijela	Barrel door hinge-3 part 112.012.01 - white	2 ili (3) po krilu ovisno o visini i tež.krila 2 or (3) per sash(dep. of height and weight of sash)		
Ručka za vrata 102.028	Door handle 102.028		2	
Četvrtka 102.025	Square spindle 102.025		1	
Cilindar (35-75) 122.095	Cylinder (35-75) 122.095		1	
Štitnik cilindra 122.098	Cylinder rosettte 122.098		2	
Protuprovalni umetak 141.002	Security pin 141.002		4	

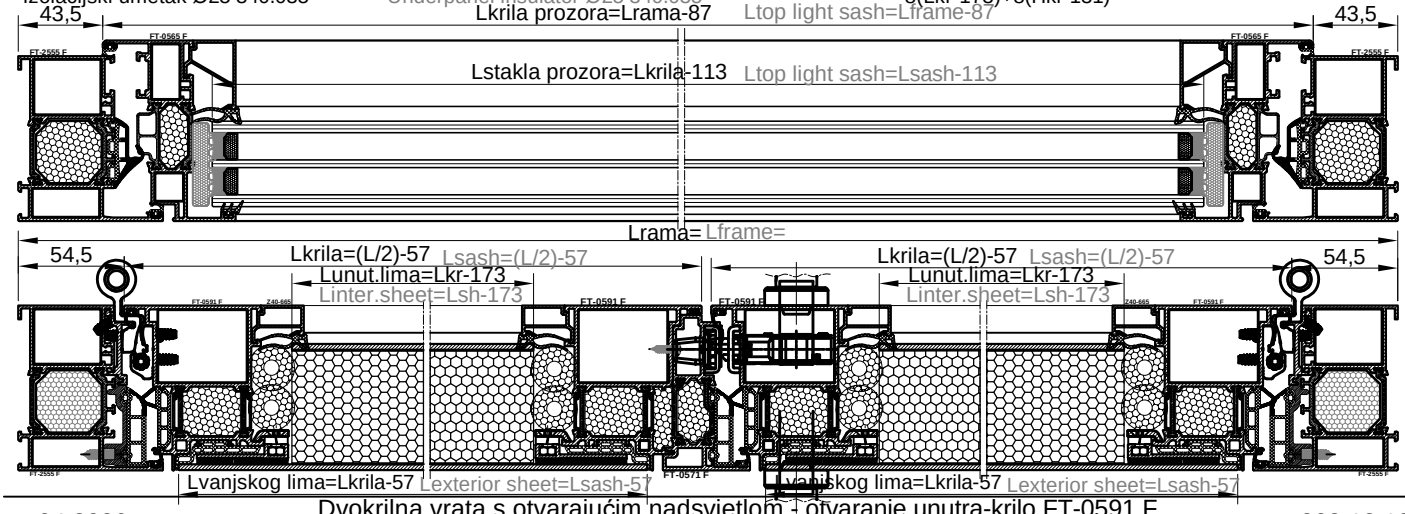




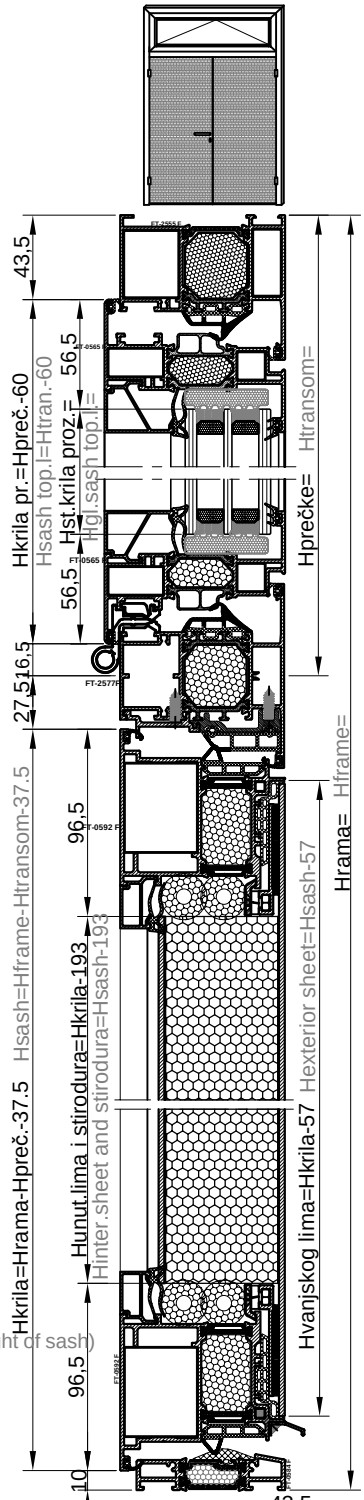
Dvokrilna vrata s nadsvjetlom - otvaranje vani
Double-leaf doorwith fixed top light - outward opening

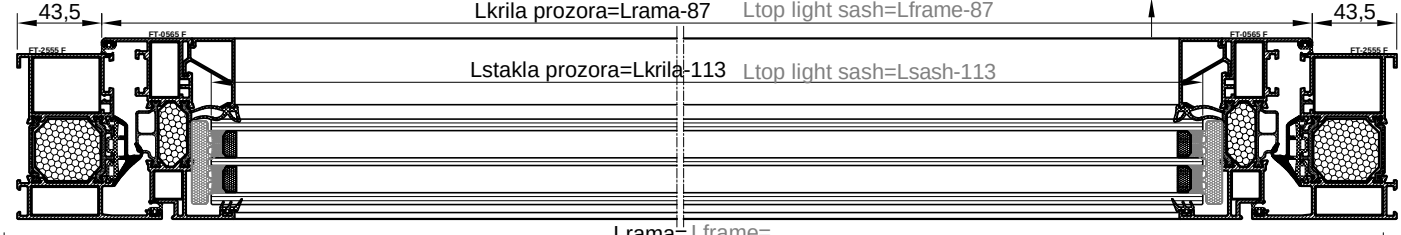
naziv name		mjera dimension	kom. pcs.	pilanje sawing angle
Ram FT-2555F	Frame FT-2555F	L	1	45-45
Ram FT-2555F	Frame FT-2555F	H	2	45-90
Krilo FT-0591F	Sash FT-0591F	(L/2)-57	4	45-45
Krilo FT-0591F	Sash FT-0591F	H-Hpreč.-37.5	4	45-45
Prag FT-0584F	Threshold FT-0584F	L-180	1	90-90
Prečka FT-2577F	Transom FT-2577F	L-90	1	90-90
Profil kombatute FT-0571F	Flying mullion FT-0571F	Hkr-57	1	90-90
Krilo prozora FT-0565F	Top light sash FT-0565F	L-87	2	45-45
Krilo prozora FT-0565F	Top light sash FT-0565F	Hpreč.-60	2	45-45
Al umetak F-1222	Additional profile F-1222	L-89	1	45-45
Al umetak F-1222	Additional profile F-1222	H-Hpreč.-17.5	1	45-90
Okapnica F-0970	Drip cap profile F-0970	Lkr-58	2	90-90
Al profil F-1093	Al profile F-1093	Lkr-76	4	45-45
Al profil F-1093	Al profile F-1093	Hkr-76	4	45-45
Staklo lajsna Z40-665	Glazing bead Z40-665	Lkr-141	4	90-90
Staklo lajsna Z40-665	Glazing bead Z40-665	Hkr-185	4	90-90
Staklo lajsna Z40-669	Glazing bead Z40-669	Lkr.proz.-93	2	90-90
Staklo lajsna Z40-669	Glazing bead Z40-669	Hkr.proz.-93	2	90-90
Kutna spojnica 710.072	Corner bracket 710.072		2	
Kutna spojnica 710.173	Corner bracket 710.173		2	
Kutna spojnica 710.136	Corner bracket 710.136		8	
Kutna spojnica 710.015	Corner bracket 710.015		8	
Kutna spojnica 710.203	Corner bracket 710.203		8	
Kutna spojnica 730.001	Corner bracket 730.001		14	
Kutna spojnica 710.485	Corner bracket 710.485		4	
Kutna spojnica 710.458	Corner bracket 710.458		4	
Kopča 141.001	Panel clamp 141.001		(4Lkr+4Hkr)/250	
Centralna brtva rama 338.004	Central gasket-frame 338.004	2Lkr+3Hkr		
Centralna brtva krila 338.006	Central gasket-sash 338.006	4Lkr+3Hkr		
Brtva na spoju rama i krila 317.002	Rebate gasket 317.002	6Lkr+6Hkr+4L+4Hpreč.		
Brtva 348.004	Gasket 348.004	4(Lkr-53)+4(Hkr-53)		
Brtva prema panelu unut. 311.003	Panel gasket-internal 311.003	4Lkr+4Hkr		
Brtva praga 331.012	Threshold gasket 331.012	L-180	1	90-90
Vanjska brtva krila proz. 328.002	Glazing gasket-external 328.002	2L+2Hpreč		
Unutarnja brtva krila proz. 311.004	Glazing gasket-internal 311.004	2L+2Hpreč.		
Centralna brtva prozora 338.050	Central gasket-window 338.050	2L+2Hpreč.		
Čep okapnice F-0970 375.001	End cap for F-0970 375.001		2 par	
Umetak na pragu 363.103	End cap for threshold 363.103		1 par	
Umetak na ramu 374.043	Add. pvc profile 374.043	L-88	1	45-45
Umetak na ramu 374.043	Add. pvc profile 374.043	H-Hpreč.-17	2	45-90
Brava G-U Secury s MR2 (35)	Multipoint lock - G-U Secury MR2 (35)		1	
tri ključanja 122.016	-122.016			
Brava G-U za pom. krilo (lijeva) 122.025	Lever-operated gear for passive leaf G-U (left) 122.025		1	
Gornji element za nastavljanje 122.026	Top shoot bolt unit 122.026		1	
Donji element za nastavljanje 122.027	Bottom shoot bolt unit 122.027		1	
Gornja prihvatna pločica 122.065	Top striking plate 122.065		1	
Donja prihvatna pločica 122.080	Bottom striking plate 122.080		1	
Trodijelna cilindrična šarka	Barrel door hinge-3 part	2 ili (3) po krilu ovisno o visini i tež.krila		
112.011.01 - bijela	112.011.01 - white	2 or (3) per sash(dep. of height and weight of sash)		
Ručka za vrata 102.028	Door handle 102.028		2	
Četvrtka 102.025	Square spindle 102.025		1	
Cilindar (35-75) 122.095	Cylinder (35-75) 122.095		1	
Štitnik cilindra 122.098	Cylinder rosettte 122.098		2	
Protuprovalni umetak 141.002	Security pin 141.002		4	
Izolacijski umetak Ø25 340.035	Underpanel insulator Ø25 340.035		8(Lkr-173)+8(Hkr-131)	

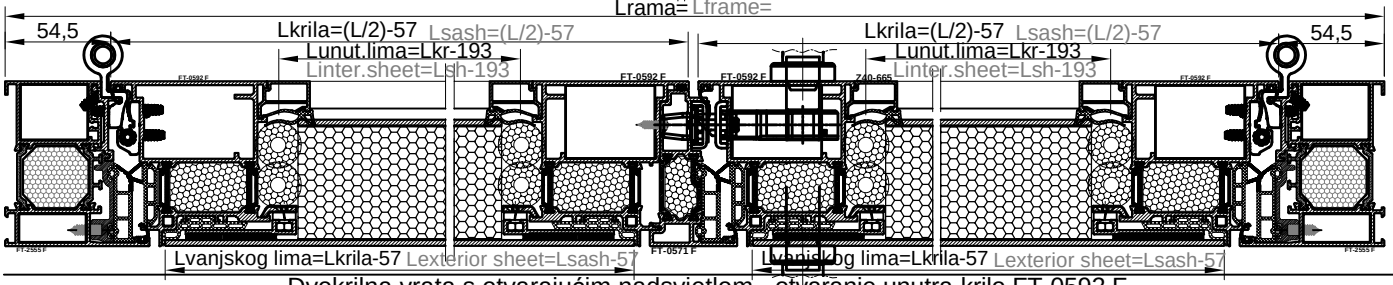




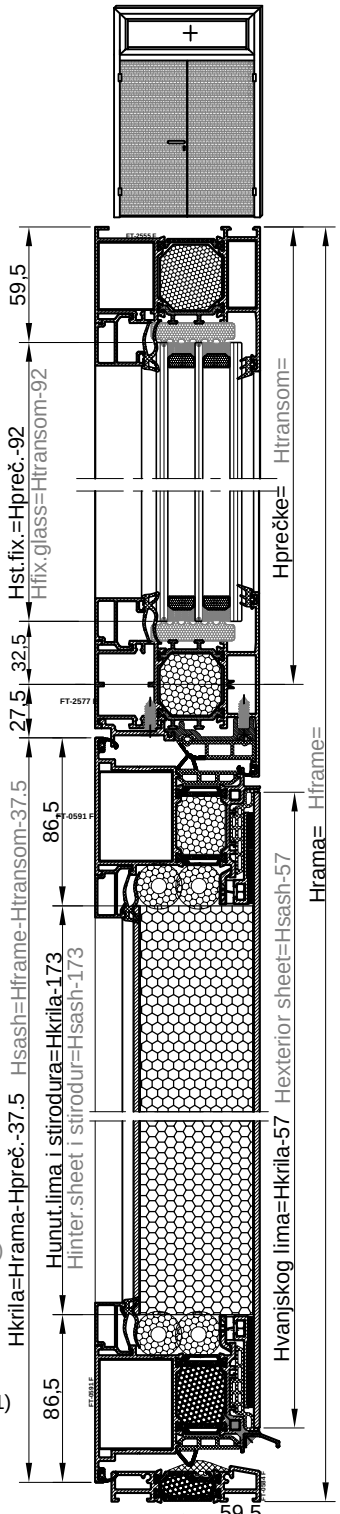
naziv name		mjera dimension	kom. pcs.	pilanje sawing angle
Ram FT-2555F	Frame FT-2555F	L	1	45-45
Ram FT-2555F	Frame FT-2555F	H	2	45-90
Krilo FT-0592F	Sash FT-0592F	(L/2)-57	4	45-45
Krilo FT-0592F	Sash FT-0592F	H-Hpreč.-37.5	4	45-45
Prag FT-0584F	Threshold FT-0584F	L-180	1	90-90
Prečka FT-2577F	Transom FT-2577F	L-90	1	90-90
Profil kombatute FT-0571F	Flying mullion FT-0571F	Hkr-57	1	90-90
Krilo prozora FT-0565F	Top light sash FT-0565F	L-87	2	45-45
Krilo prozora FT-0565F	Top light sash FT-0565F	Hpreč.-60	2	45-45
Al umetak F-1222	Additional profile F-1222	L-89	1	45-45
Al umetak F-1222	Additional profile F-1222	H-Hpreč.-17.5	2	45-90
Okapnica F-0970	Drip cap profile F-0970	Lkr-58	2	90-90
Al profil F-1205	Al profile F-1205	Lkr-76	4	45-45
Al profil F-1205	Al profile F-1205	Hkr-76	4	45-45
Staklo lajsna Z40-665	Glazing bead Z40-665	Lkr-161	4	90-90
Staklo lajsna Z40-665	Glazing bead Z40-665	Hkr-205	4	90-90
Staklo lajsna Z40-669	Glazing bead Z40-669	Lkr.proz.-93	2	90-90
Staklo lajsna Z40-669	Glazing bead Z40-669	Hkr.proz.-93	2	90-90
Kutna spojnica 710.072	Corner bracket 710.072		2	
Kutna spojnica 710.173	Corner bracket 710.173		2	
Kutna spojnica 710.136	Corner bracket 710.136		8	
Kutna spojnica 710.015	Corner bracket 710.015		8	
Kutna spojnica 710.203	Corner bracket 710.203		8	
Kutna spojnica 730.001	Corner bracket 730.001		18	
Kutna spojnica 710.485	Corner bracket 710.485		4	
Kutna spojnica 710.458	Corner bracket 710.458		4	
Kopča 141.001	Panel clamp 141.001		(4Lkr+4Hkr)/250	
Centralna brtva rama 338.004	Central gasket-frame 338.004	2Lkr+2Hkr		
Centralna brtva krila 338.006	Central gasket-sash 338.006	4Lkr+3Hkr		
Brtva na spoju rama i krila 317.002	Rebate gasket 317.002	6Lkr+6Hkr+4L+4Hpreč.		
Brtva 348.004	Brtva 348.004	4(Lkr-53)+4(Hkr-53)		
Brtva prema panelu unut. 311.003	Panel gasket-internal 311.003	4Lkr+4Hkr		
Brtva praga 331.012	Threshold gasket 331.012	L-180	1	90-90
Vanjska brtva krila proz. 328.002	Glazing gasket-external 328.002	2L+2Hpreč.		
Unutarnja brtva krila proz. 311.004	Glazing gasket-internal 311.004	2L+2Hpreč.		
Centralna brtva prozora 338.050	Central gasket-window 338.050	2L+2Hpreč.		
Čep okapnice F-0970 375.001	End cap for F-0970 375.001		1 par	
Umetak na pragu 363.103	End cap for threshold 363.103		1 par	
Umetak na ramu 374.043	Add. pvc profile 374.043	L-88	1	45-45
Umetak na ramu 374.043	Add. pvc profile 374.043	H-Hpreč.-17	2	45-90
Brava G-U Secury s MR2 (45) tri ključanja 122.015	Multipoint lock - G-U Secury MR2 (45) -122.015		1	
Brava G-U za pom. krilo (lijeva) 122.025	Lever-operated gear for passive leaf G-U (left) 122.025		1	
Gornji element za nastavljanje 122.026	Top shoot bolt unit 122.026		1	
Donji element za nastavljanje 122.027	Bottom shoot bolt unit 122.027		1	
Gornja prihvatna pločica 122.065	Top striking plate 122.065		1	
Donja prihvatna pločica 122.080	Bottom striking plate 122.080		1	
Trodijelna cilindrična šarka 112.011.01 - bijela	Barrel door hinge-3 part 112.011.01 - white	2 ili (3) po krilu ovisno o visini i tež.krila 2 or (3) per sash(dep. of height and weight of sash)		
Ručka za vrata 102.028	Door handle 102.028		2	
Četvrtka 102.025	Square spindle 102.025		1	
Cilindar (35-75) 122.095	Cylinder (35-75) 122.095		1	
Štitnik cilindra 122.098	Cylinder rosettte 122.098		2	
Protuprovalni umetak 141.002	Security pin 141.002		4	
Izolacijski umetak Ø25 340.035	Underpanel insulator Ø25 340.035		8(Lkr-193)+8(Hkr-151)	

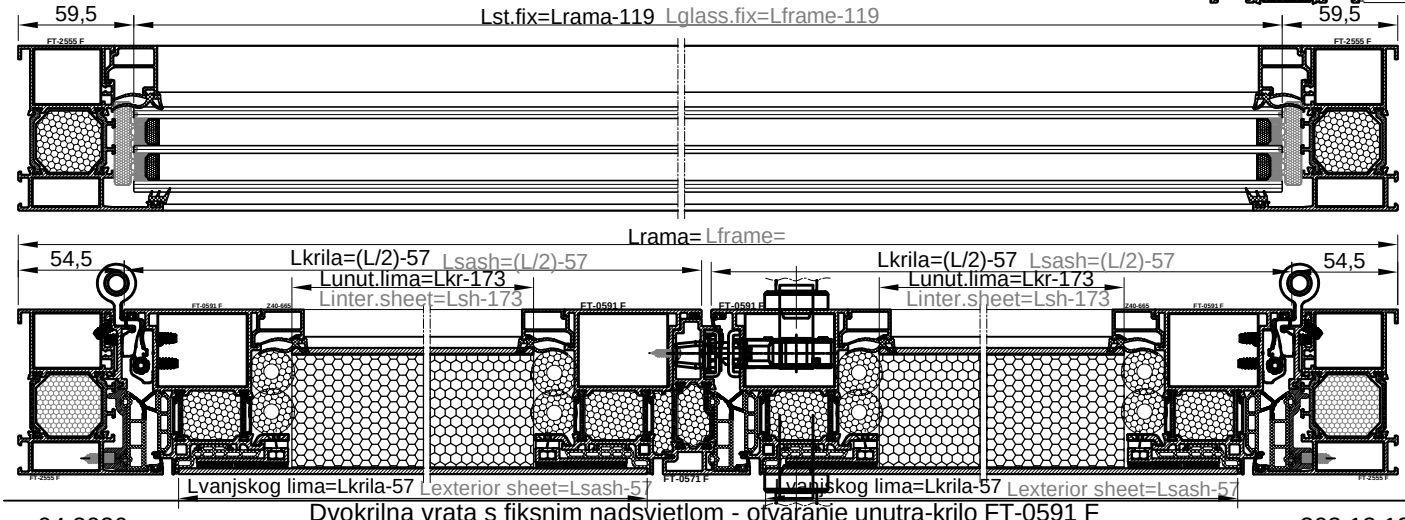




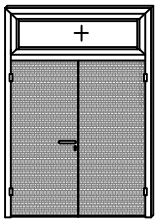


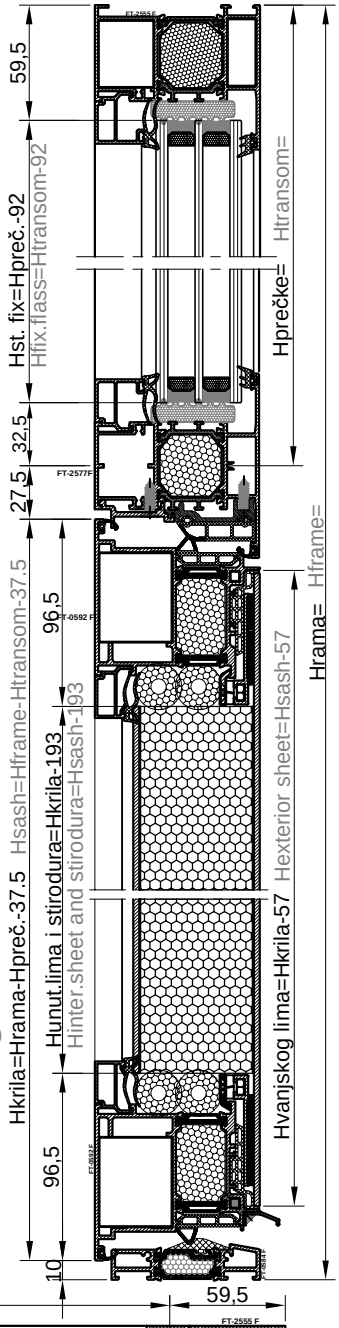
naziv name		mjera dimension	kom. pcs.	pilanje sawing angle
Ram FT-2555F	Frame FT-2555F	L	1	45-45
Ram FT-2555F	Frame FT-2555F	H	2	45-90
Krilo FT-0591F	Sash FT-0591F	(L/2)-57	4	45-45
Krilo FT-0591F	Sash FT-0591F	H-Hpreč.-37.5	4	45-45
Prag FT-0584F	Threshold FT-0584F	L-180	1	90-90
Prečka FT-2577F	Transom FT-2577F	L-90	1	90-90
Profil kombatute FT-0571F	Flying mullion FT-0571F	Hkr-57	1	90-90
Al umetak F-1222	Additional profile F-1222	L-89	1	45-45
Al umetak F-1222	Additional profile F-1222	H-Hpreč.-17.5	1	45-90
Okapnica F-0970	Drip cap profile F-0970	Lkr-58	2	90-90
Al profil F-1093	Al profile F-1093	Lkr-76	4	45-45
Al profil F-1093	Al profile F-1093	Hkr-76	4	45-45
Staklo lajsna Z40-665	Glazing bead Z40-665	Lkr-141	4	90-90
Staklo lajsna Z40-665	Glazing bead Z40-665	Hkr-185	4	90-90
Staklo lajsna Z40-667	Glazing bead Z40-667	L-99	2	90-90
Staklo lajsna Z40-667	Glazing bead Z40-667	Hpreč.-116	2	90-90
Kutna spojnica 710.072	Corner bracket 710.072		2	
Kutna spojnica 710.173	Corner bracket 710.173		2	
Kutna spojnica 710.136	Corner bracket 710.136		8	
Kutna spojnica 710.015	Corner bracket 710.015		8	
Kutna spojnica 710.203	Corner bracket 710.203		8	
Kutna spojnica 730.001	Corner bracket 730.001		10	
Kopča 141.001	Panel clamp 141.001		(4Lkr+4Hkr)/250	
Centralna brtva rama 338.004	Central gasket-frame 338.004	2Lkr+3Hkr		
Centralna brtva krila 338.006	Central gasket-sash 338.006	4Lkr+3Hkr		
Brtva na spoju rama i krila 317.002	Rebate gasket 317.002	6Lkr+6Hkr+4L+4Hpreč.		
Brtva 348.004	Gasket 348.004	4(Lkr-53)+4(Hkr-53)		
Brtva prema panelu unut. 311.003	Panel gasket-internal 311.003	4Lkr+4Hkr		
Brtva praga 331.012	Threshold gasket 331.012	L-180	1	90-90
Vanjska brtva fix. 328.003	Glazing gasket-external 328.003	2L+2Hpreč		
Unutarnja brtva fix. 311.004	Glazing gasket-internal 311.004	2L+2Hpreč.		
Čep okapnice F-0970 375.001	End cap for F-0970 375.001		2 par	
Umetak na pragu 363.103	End cap for threshold 363.103		1 par	
Umetak na ramu 374.043	Additional pvc profile 374.043	L-88	1	45-45
Umetak na ramu 374.043	Additional pvc profile 374.043	H-Hpreč.-17	2	45-90
Brava G-U Secury s MR2 (35) tri ključanja 122.016	Multipoint lock - G-U Secury MR2 (35) -122.016		1	
Brava G-U za pom. krilo (lijeva) 122.025	Lever-operated gear for passive leaf G-U (left) 122.025		1	
Gornji element za nastavljanje 122.026	Top shoot bolt unit 122.026		1	
Donji element za nastavljanje 122.027	Bottom shoot bolt unit 122.027		1	
Gornja prihvatna pločica 122.065	Top striking plate 122.065		1	
Donja prihvatna pločica 122.080	Bottom striking plate 122.080		1	
Trodijelna cilindrična šarka 112.011.01 - bijela	Barrel door hinge-3 part 112.011.01 - white	2 ili (3) po krilu ovisno o visini i tež.krila 2 or (3) per sash(dep. of height and weight of sash)		
Ručka za vrata 102.028	Door handle 102.028		2	
Četvrtka 102.025	Square spindle 102.025		1	
Cilindar (35-75) 122.095	Cylinder (35-75) 122.095		1	
Štitnik cilindra 122.098	Cylinder rosettte 122.098		2	
Protuprovalni umetak 141.002	Security pin 141.002		4	
Izolacijski umetak Ø25 340.035	Underpanel insulator Ø25 340.035		8(Lkr-173)+8(Hkr-131)	

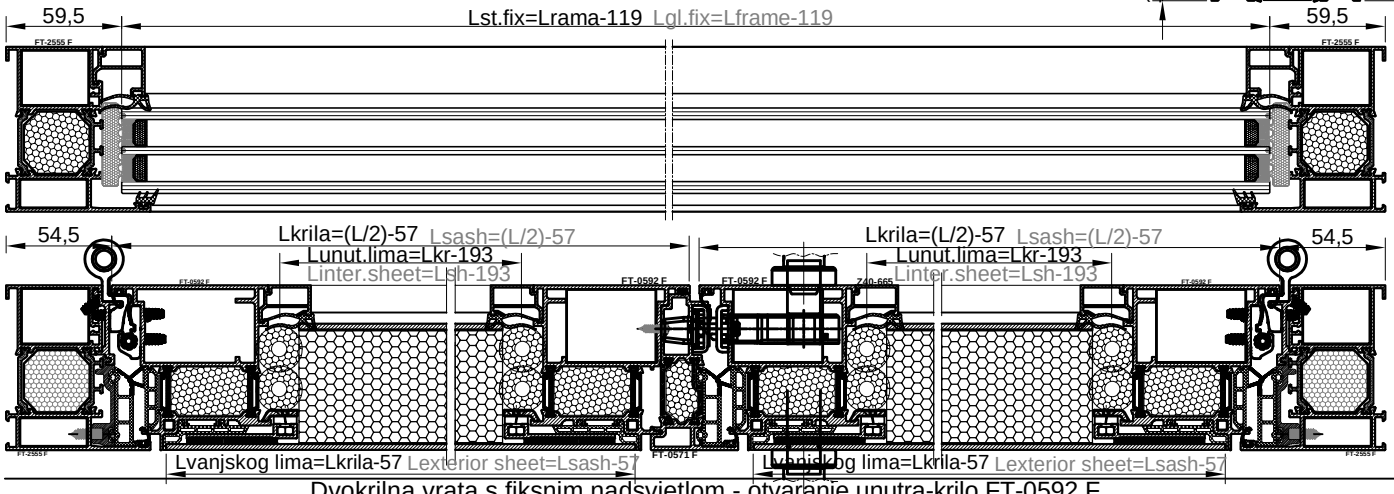


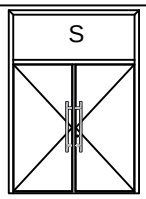


naziv name		mjera dimension	kom. pcs.	pilanje sawing angle
Ram FT-2555F	Frame FT-2555F	L	1	45-45
Ram FT-2555F	Frame FT-2555F	H	2	45-90
Krilo FT-0592F	Sash FT-0592F	(L/2)-57	4	45-45
Krilo FT-0592F	Sash FT-0592F	H-Hpreč.-37.5	4	45-45
Prag FT-0584F	Threshold FT-0584F	L-180	1	90-90
Prečka FT-2577F	Transom FT-2577F	L-90	1	90-90
Profil kombatute FT-0571F	Flying mullion FT-0571F	Hkr-57	1	90-90
Al umetak F-1222	Al umetak F-1222	L-89	1	45-45
Al umetak F-1222	Al umetak F-1222	H-Hpreč.-17.5	2	45-90
Okapnica F-0970	Drip cap profile F-0970	Lkr-58	2	90-90
Al profil F-1205	Al profile F-1205	Lkr-76	4	45-45
Al profil F-1205	Al profile F-1205	Hkr-76	4	45-45
Staklo lajsna Z40-665	Glazing bead Z40-665	Lkr-161	4	90-90
Staklo lajsna Z40-665	Glazing bead Z40-665	Hkr-205	4	90-90
Staklo lajsna Z40-667	Glazing bead Z40-667	L-99	2	90-90
Staklo lajsna Z40-667	Glazing bead Z40-667	Hpreč.-116	2	90-90
Kutna spojnica 710.072	Corner bracket 710.072		2	
Kutna spojnica 710.173	Corner bracket 710.173		2	
Kutna spojnica 710.136	Corner bracket 710.136		8	
Kutna spojnica 710.015	Corner bracket 710.015		8	
Kutna spojnica 710.203	Corner bracket 710.203		8	
Kutna spojnica 730.001	Corner bracket 730.001		10	
Kopča 141.001	Panel clamp 141.001		(4Lkr+4Hkr)/250	
Centralna brtva rama 338.004	Central gasket-frame 338.004	2Lkr+2Hkr		
Centralna brtva krila 338.006	Central gasket-sash 338.006	4Lkr+3Hkr		
Brtva na spoju rama i krila 317.002	Rebate gasket 317.002	6Lkr+6Hkr+4L+4Hpreč.		
Brtva 348.004	Gasket 348.004	4(Lkr-53)+4(Hkr-53)		
Brtva prema panelu unut. 311.003	Panel gasket -int.311.003	4Lkr+4Hkr		
Brtva praga 331.012	Threshold gasket 331.012	L-180	1	90-90
Vanjska brtva fix. 328.003	Glazing gasket-external 328.003	2L+2Hpreč.		
Unutarnja brtva fix. 311.004	Glazin gasket-internal 311.004	2L+2Hpreč.		
Čep okapnice F-0970 375.001	End cap for F-0970 375.001		1 par	
Umetak na pragu 363.103	End cap for threshold 363.103		1 par	
Umetak na ramu 374.043	Add. pvc profile 374.043	L-88	1	45-45
Umetak na ramu 374.043	Add. pvc profile 374.043	H-Hpreč.-17	2	45-90
Brava G-U Secury s MR2 (45) tri ključanja 122.015	Multipoint lock - G-U Secury MR2 (45) -122.015		1	
Brava G-U za pom. krilo (lijeva) 122.025	Lever-operated gear for passive leaf G-U (left) 122.025		1	
Gornji element za nastavljanje 122.026	Top shoot bolt unit 122.026		1	
Donji element za nastavljanje 122.027	Bottom shoot bolt unit 122.027		1	
Gornja prihvatna pločica 122.065	Top striking plate 122.065		1	
Donja prihvatna pločica 122.080	Bottom striking plate 122.080		1	
Trodijelna cilindrična šarka 112.011.01 - bijela	Barrel door hinge-3 part 112.011.01 - white	2 ili (3) po krilu ovisno o visini i tež.krila 2 or (3) per sash(dep. of height and weight of sash)		
Ručka za vrata 102.028	Door handle 102.028		2	
Četvrtka 102.025	Square spindle 102.025		1	
Cilindar (35-75) 122.095	Cylinder (35-75) 122.095		1	
Štitnik cilindra 122.098	Cylinder rosettte 122.098		2	
Protuprovalni umetak 141.002	Security pin 141.002		4	
Izolacijski umetak Ø25 340.035	Underpanel insulator Ø25 340.035		8(Lkr-193)+8(Hkr-151)	

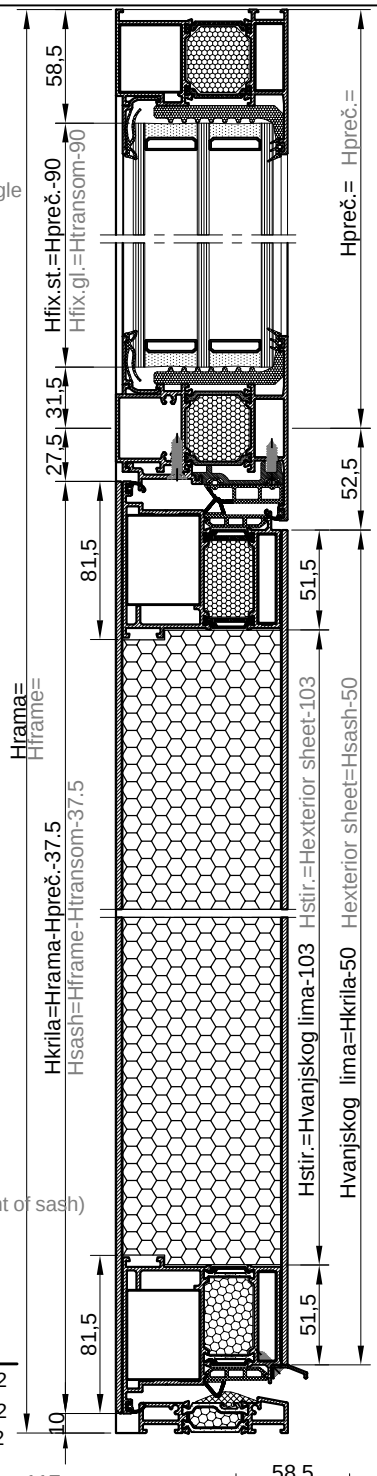


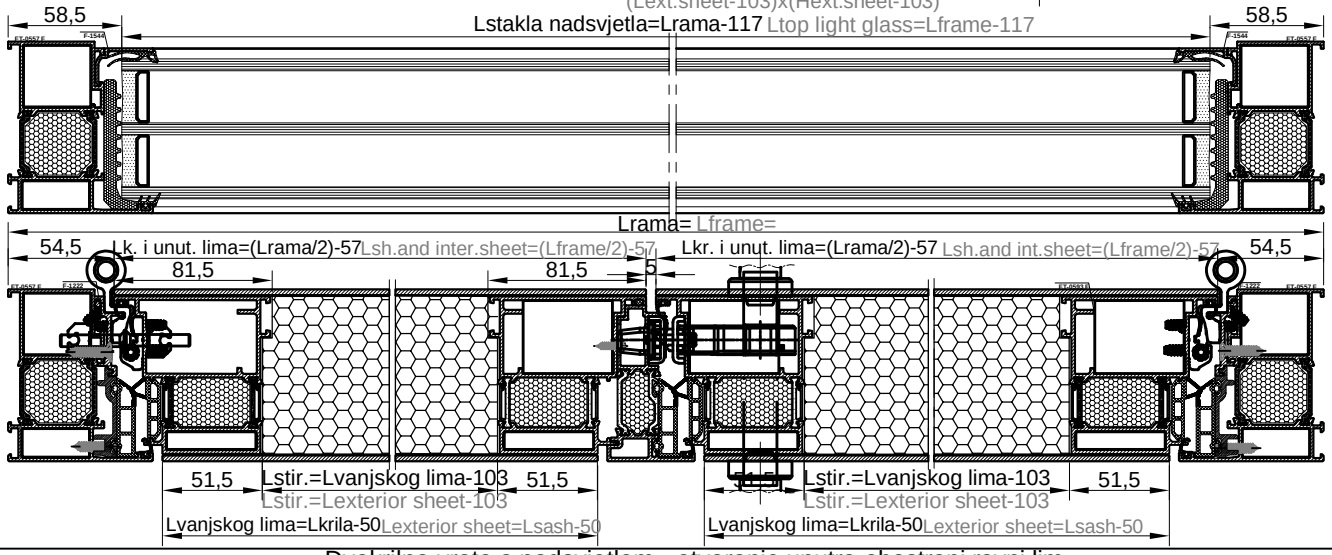




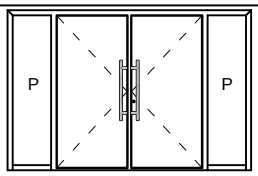


naziv name		mjera dimension	kom. pcs.	pilanje sawing angle
Ram FT-0557F	Frame FT-0557F	L	1	45-45
Ram FT-0557F	Frame FT-0557F	H	2	45-90
Krilo FT-0593F	Sash FT-0593F	(L/2)-57	4	45-45
Krilo FT-0593F	Sash FT-0593F	H-Hpreč-37.5	4	45-45
Prag FT-0584F	Threshold FT-0584F	L-180	1	90-90
Prečka FT-0580F	Transom FT-0580F	L-89	1	90-90
Profil kombatute FT-0571F	Flying mullion FT-0571F	Hkr-57	1	90-90
Okapnica F-0970	Drip cap profile F-0970	Lkr-58	2	90-90
Al profil F-1222	Al profile F-1222	L-89	1	90-90
Al profil F-1222	Al profile F-1222	H-(Hpr.+17.5)	2	90-90
Staklo lajsna F-1544	Glazing bead F-1544	L-99	2	90-90
Staklo lajsna F-1544	Glazing bead F-1544	Hpreč.-122	2	90-90
Kutna spojnica 710.126	Corner bracket 710.126		2	
Kutna spojnica 710.173	Corner bracket 710.173		2	
Kutna spojnica 710.136	Corner bracket 710.136		8	
Kutna spojnica 710.169	Corner bracket 710.169		8	
Kutna spojnica 730.001	Corner bracket 730.001		10	
Centralna brtva rama 338.004	Central gasket-frame 338.004	1L+2H		
Centralna brtva krila 338.006	Central gasket-sash 338.006	4Lkr+3Hkr		
Brtva na spoju rama i krila 317.002	Rebate gasket 317.002	3Lkr+6Hkr		
Brtva praga 331.012	Threshold gasket 331.012	L-180	1	90-90
Vanjska brtva fix. 328.002	Glazing gasket-external 328.002	2L+2Hpreč		
Unutarnja brtva fix. 311.003	Glazing gasket-internal 311.003	2L+2Hpreč		
Čep okapnice F-0970 375.001	End cap for F-0970 375.001		1 par	
Umetak na pragu 363.103	End cap for threshold 363.103		1 par	
Umetak na ramu 374.043	Add. pvc profile 374.043	L-88	1	45-45
Umetak na ramu 374.043	Add. pvc profile 374.043	H-(Hpr+17)	2	45-90
Brava G-U Secury s MR2 (45) tri ključanja 122.015	Multipoint lock - G-U Secury MR2 (45) -122.015		1	
Brava G-U za pom. krilo (lijeva) 122.025	Lever-operated gear for passive leaf G-U (left) 122.025	1		
Gornji element za nastavljanje 122.026	Top shoot bolt unit 122.026		1	
Donji element za nastavljanje 122.027	Bottom shoot bolt unit 122.027		1	
Gornja prihvatna pločica 122.065	Top striking plate 122.065		1	
Donja prihvatna pločica 122.080	Bottom striking plate 122.080		1	
Trodijelna cilindrična šarka 112.011.01 - bijela	Barrel door hinge-3 part 112.011.01 - white	2 ili (3) po krilu ovisno o visini i tež.krila 2 or (3) per sash(dep. of height and weight of sash)		
Ručka za vrata 102.028	Door handle 102.028		2	
Četvrtka 102.025	Square spindle 102.025		1	
Cilindar (35-75) 122.095	Cylinder (35-75) 122.095		1	
Štitnik cilindra 122.098	Cylinder rosettte 122.098		2	
Protuprovalni umetak 141.002	Security pin 141.002		4	
Vanjski lim panela 3 mm	Exterior sheet 3 mm	(Lkr.-50)x(Hkr.-50)	2	
Unutarnji lim panela 3 mm	Interior sheet 3 mm	LkrxHkr	2	
Stirodur (ispuna panela 81.4 mm)	Stirodur (panel 81.4 mm)	(Lvanj.lima-103)x(Hvanj.lima-103) (Lext.sheet-103)x(Hext.sheet-103)	2	

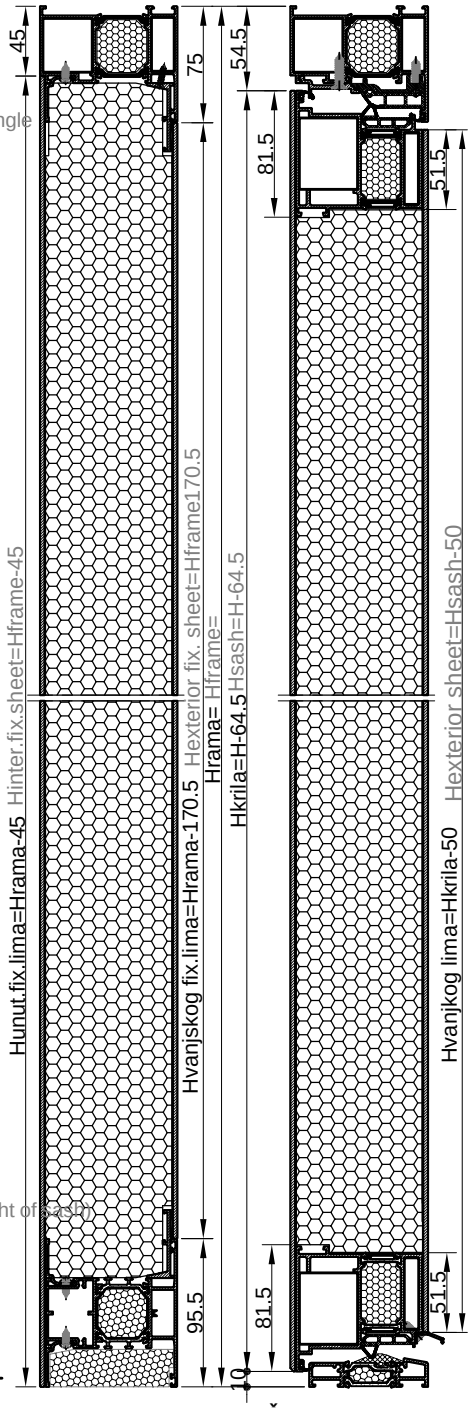




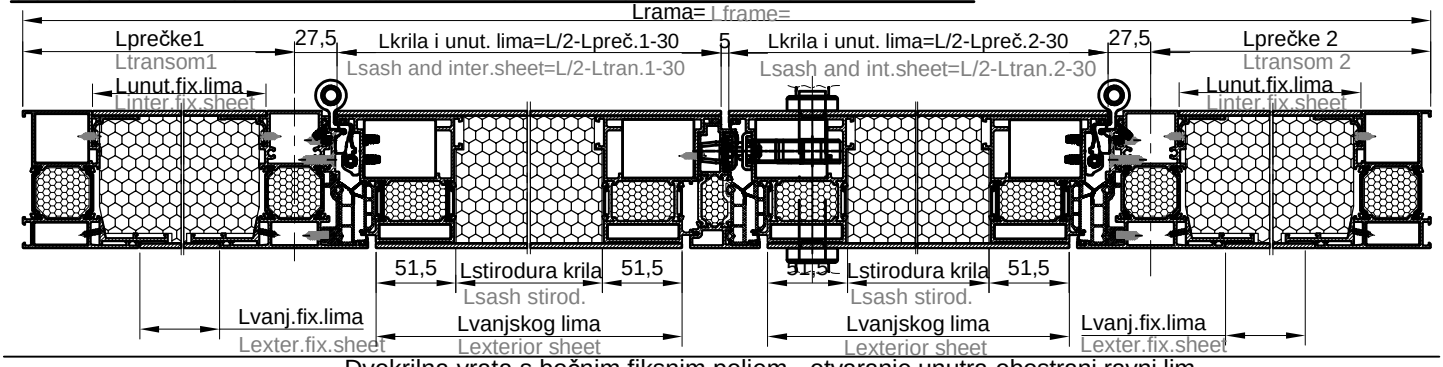
Dvokrilna vrata s bočnim fiksnim poljem
Double-leaf door with side fixed field



naziv name		mjera dimension	kom. pcs.	pilanje sawing angle
Ram FT-0557F	Frame FT-0557F	L	1	45-45
Ram FT-0557F	Frame FT-0557F	H	2	45-90
Krilo FT-0593F	Sash FT-0593F	L/2-Lprečke-30	4	45-45
Krilo FT-0593F	Sash FT-0593F	H-64.5	4	45-45
Prag FT-0584F	Threshold FT-0584F	L-Lpreč.1-Lpreč.2-126	1	90-90
Prečka FT-2577F	Transom FT-2577F	Lpreč.1-63	2	90-90
Prečka FT-0580F	Transom FT-0580F	H-44.5	2	90-90
Profil kombatute FT-0571F	Flying mullion FT-0571F	Hkr-57	1	90-90
Okapnica F-0970	Drip cap profile F-0970	Lkr-58	2	90-90
Al profil F-1222	Al profile F-1222	L-Lpreč.1-Lpreč.2-35	1	90-90
Al profil F-1222	Al profile F-1222	H-44.5	2	90-90
Staklo lajsna F-1544	Glazing bead F-1544	Lpreč.1-72	6	90-90
Staklo lajsna F-1544	Glazing bead F-1544	H-169.5	4	90-90
Al umetak F-1543	Additional profile F-1543	Lpreč.1-72	4	90-90
Al umetak F-1543	Additional profile F-1543	H-207	4	90-90
Kutna spojnica 710.126	Corner bracket 710.126		2	
Kutna spojnica 710.173	Corner bracket 710.173		2	
Kutna spojnica 710.136	Corner bracket 710.136		8	
Kutna spojnica 710.169	Corner bracket 710.169		8	
Kutna spojnica 730.001	Corner bracket 730.001		10	
Veznik 710.082	T bracket 710.082		6	
Veznik 710.083	T bracket 710.083		6	
Cent. brtva rama 338.004	Cent. gasket-frame 338.004	2Lkr+3Hkr		
Cent. brtva krila 338.006	Cent. gasket-sash 338.006	4Lkr+3Hkr		
Brtva 317.002	Rebate gasket 317.002	6Lkr+6Hkr		
Brtva praga 331.012	Threshold gasket 331.012	L-Lpreč.1-Lpreč.2-126	1	90-90
Čep okapnice F-0970 375.001	End cap for F-0970 375.001		2 para	
Umetak na pragu 363.103	End cap for threshold 363.103		1 par	
Umetak na ramu 374.043	Add. pvc profile 374.043	L-Lpreč1.-Lpreč.2-34	1	45-45
Umetak na ramu 374.043	Add. pvc profile 374.043	H-44	2	45-90
Brava G-U Secury s MR2 (45) tri ključanja 122.015	Multipoint lock - G-U Secury MR2 (45) -122.015		1	
Brava G-U za pom. krilo (lijeva) 122.025	Lever-operated gear for passive leaf G-U (left) 122.025		1	
Gornji element za nastavljanje 122.026	Top shoot bolt unit 122.026		1	
Donji element za nastavljanje 122.027	Bottom shoot bolt unit 122.027		1	
Gornja prihvatna pločica 122.065	Top striking plate 122.065		1	
Donja prihvatna pločica 122.080	Bottom striking plate 122.080		1	
Trodijelna cilindrična šarka 112.011.01 - bijela	Barrel door hinge-3 part 112.011.01 - white	2 ili (3) po krilu ovisno o visini i tež.krila 2 or (3) per sash(dep. of height and weight of sash)		
Ručka za vrata 102.028	Door handle 102.028		2	
Četvrtka 102.025	Square spindle 102.025		1	
Cilindar (35-75) 122.095	Cylinder (35-75) 122.095		1	
Štitnik cilindra 122.098	Cylinder rosette 122.098		2	
Protuprovalni umetak 141.002	Security pin 141.002		4	
Vanjski lim panela krila 3 mm	Exterior sheet 3 mm	(Lkr.-50)x(Hkr.-50)	2	
Unut. lim panela krila 3 mm	Inter.sheet pan.sash 3 mm	LkrxHkr		
Stirodur u krilu (ispuna panela 81.4 mm)	Stirodur in sash (panel 81.4 mm)	(Lvanj.lima-103)x(Hvanj.lima-103) (Lext.sheet-103)x(Hext.sheet-103)	2	
Vanjski lim panela fixnog 3 mm	Ext. sheet panela fix. 3 mm	(Lpreč.-124)x(H-170.5)	2	
Unutarnji lim panela fixnog 3 mm	Inter. sheet pan.fix. 3 mm	(Lpreč.-63.5)x(H-45)	2	
Stirodur u fixnom (ispuna panela 81.4 mm)	Stirodur in fixed part (panel 81.4 mm)	(Lpreč.-73)x(H-121) (Ltran.-73)x(H-121)	2	



NAPOMENA:U IZRAČUNU JE UZETO DA JE Lprečke 1=Lprečke 2
REMARK: CUTTING LIST Ltransom 1=Ltransom 2
NAPOMENA:U IZRAČUNU JE UZETO DA JE Lprečke 1=Lprečke 2
REMARK: CUTTING LIST Ltransom 1=Ltransom 2

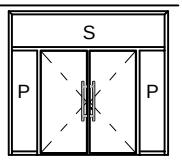


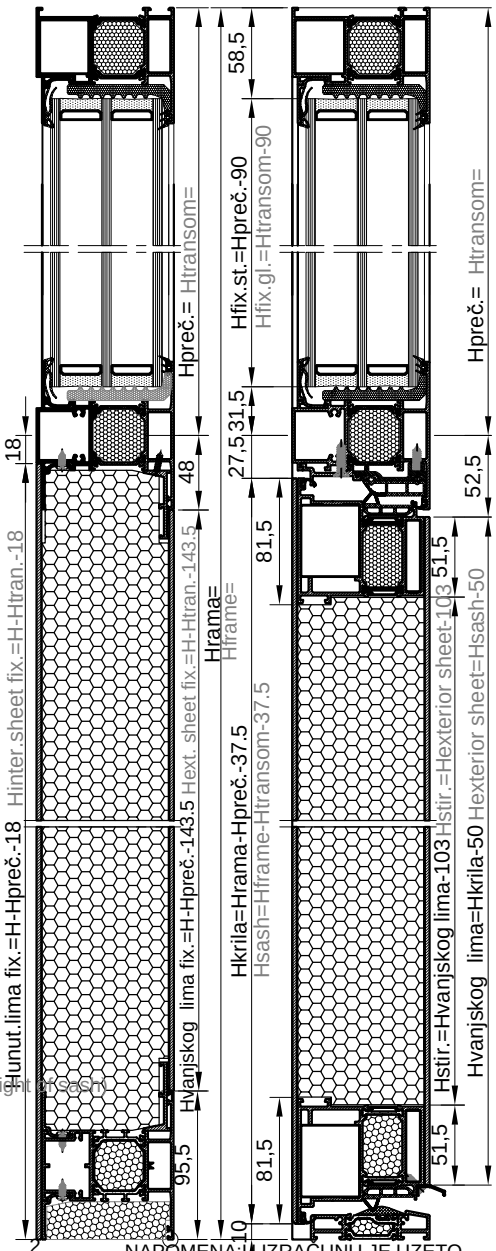
Dvokrilna vrata s bočnim fiksnim poljem i nadsvjetlom
Double-leaf door with side fixed field and top light

naziv name		mjera dimension	kom. pcs.	pilanje sawing angle
Ram FT-0557F	Frame FT-0557F	L	1	45-45
Ram FT-0557F	Frame FT-0557F	H	2	45-90
Krilo FT-0593F	Sash FT-0593F	L/2-Lprečke-30	4	45-45
Krilo FT-0593F	Sash FT-0593F	H-Hpreč.-37.5	4	45-45
Prag FT-0584F	Threshold FT-0584F	L-Lpreč.1-Lpreč.2-126	1	90-90
Prečka FT-0580F	Transom FT-0580F	L-89	1	90-90
Prečka FT-2577F	Transom FT-2577F	Lpreč.-63	2	90-90
Prečka FT-0580F	Transom FT-0580F	H-Hpreč.-17.5	2	90-90
Profil kombatute FT-0571F	Flying mullion FT-0571F	Hkr-57	1	90-90
Okapnica F-0970	Drip cap profile F-0970	Lkr-58	2	90-90
Al profil F-1222	Al profile F-1222	L-Lpreč.1-Lpreč.2-35	1	45-45
Al profil F-1222	Al profile F-1222	H-Hpreč.-17.5	2	45-90
Staklo lajsna F-1544	Glazing bead F-1544	L-99	2	90-90
Staklo lajsna F-1544	Glazing bead F-1544	Lpreč.1-72	6	90-90
Staklo lajsna F-1544	Glazing bead F-1544	Hpreč.-122	2	90-90
Staklo lajsna F-1544	Glazing bead F-1544	H-Hpreč.-142.5	4	90-90
Al umetak F-1543	Additional profile F-1543	Lpreč.1-72	4	90-90
Al umetak F-1543	Additional profile F-1543	H-Hpreč.-180.5	4	90-90
Kutna spojnica 710.126	Corner bracket 710.126		2	
Kutna spojnica 710.173	Corner bracket 710.173		2	
Kutna spojnica 710.136	Corner bracket 710.136		8	
Kutna spojnica 710.169	Corner bracket 710.169		8	
Kutna spojnica 730.001	Corner bracket 730.001		10	
Veznik 710.082	T bracket 710.082		8	
Veznik 710.083	T bracket 710.083		8	
Cent. brtva rama 338.004	Cent. gasket-frame 338.004	2Lk+3Hkr		
Cent. brtva krila 338.006	Cent. gasket-sash 338.006	4Lkr+3Hkr		
Brtva 317.002	Rebate gasket 317.002	6Lkr+6Hkr		
Brtva praga 331.012	Threshold gasket 331.012	L-Lpreč.1-Lpreč.2-126	1	90-90
Vanjska brtva fix. 328.002	Glazing gasket-ext. 328.002	2L+2Hpreč.		
Unutarnja brtva fix. 311.003	Glazing gasket-int. 311.003	2L+2Hpreč.		
Čep okap. F-0970 375.001	End cap for F-0970 375.001		2 para	
Umetak na pragu 363.103	End cap for threshold 363.103		1 par	
Umetak na ramu 374.043	Add. pvc profile 374.043	L-Lpreč1.-Lpreč.2-34	1	45-45
Umetak na ramu 374.043	Add. pvc profile 374.043	H-Hpreč.-17	2	45-90

Brava G-U Secury s MR2 (45) tri ključanja 122.015	Multipoint lock - G-U Secury MR2 (45) -122.015		1
Brava G-U za pom. krilo (lijeva) 122.025	Lever-operated gear for passive leaf G-U (left) 122.025		1
Gornji element za nast.122.026	Top shoot bolt unit 122.026		1
Donji element za nast.122.027	Bottom shoot bolt unit 122.027		1
Gornja prihvatna pločica 122.065	Top striking plate 122.065		1
Donja prihvatna pločica 122.080	Bottom striking plate 122.080		1
Trodijelna cilindrična šarka 112.011.01 - bijela	Barrel door hinge-3 part 112.011.01 - white	2 ili (3) po krilu ovisno o visini i tež.krila 2 or (3) per sash(dep. of height and weight of sash)	
Ručka za vrata 102.028	Door handle 102.028		2
Četvrtka 102.025	Square spindle 102.025		1
Cilindar (35-75) 122.095	Cylinder (35-75) 122.095		1
Štitnik cilindra 122.098	Cylinder rosette 122.098		2
Protuprovalni umetak 141.002	Security pin 141.002		4

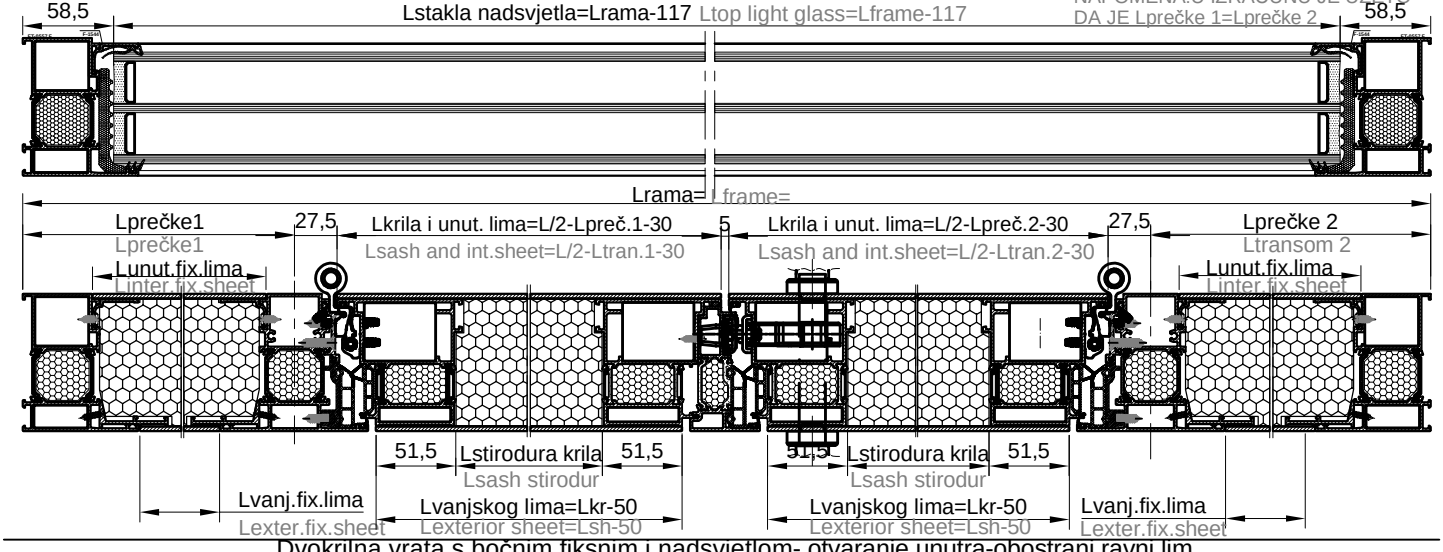
Vanjski lim panela fixnog 3 mm	Ext.sheet panel in fixed part 3 mm	(Lpreč.-124)x(H-Hpreč.-143.5)	2
Unutarnji lim panela fixnog 3 mm	Int.sheet panel in fixed part 3 mm	(Lpreč.-63.5)x(H-Hpreč.-18)	2
Stirodur u fixnom (panel 81.4 mm)	Stirodur in fix.part (panel 81.4 mm)	(Lpreč.-73)x(H-Hpreč.-94)	2





NAPOMENA:U IZRAČUNU JE UZETO DA JE Lprečke 1=Lprečke 2

NAPOMENA:U IZRAČUNU JE UZETO DA JE Lprečke 1=Lprečke 2



Dvokrilna vrata s bočnim fiksnim i nadsvjetlom- otvaranje unutra-obostrani ravni lim
Double-leaf door with side light and top light- inward opening-both side hidden sash

FEAL

Skenirajte QR kod i registrirajte se na partner.feal.ba

Scan the QR code and register on partner.feal.ba

TERMO **85 VS** I **VP**

Knjiga B / *Book B*

Travanj 2026. / April 2026

FEAL d.o.o.
Trnska cesta 146
88220 Široki Brijeg
Bosna i Hercegovina
Tel. +387 39 704-269; 705-807; 705-636
Fax. +387 39 704-358
info@feal.ba
www.feal.ba